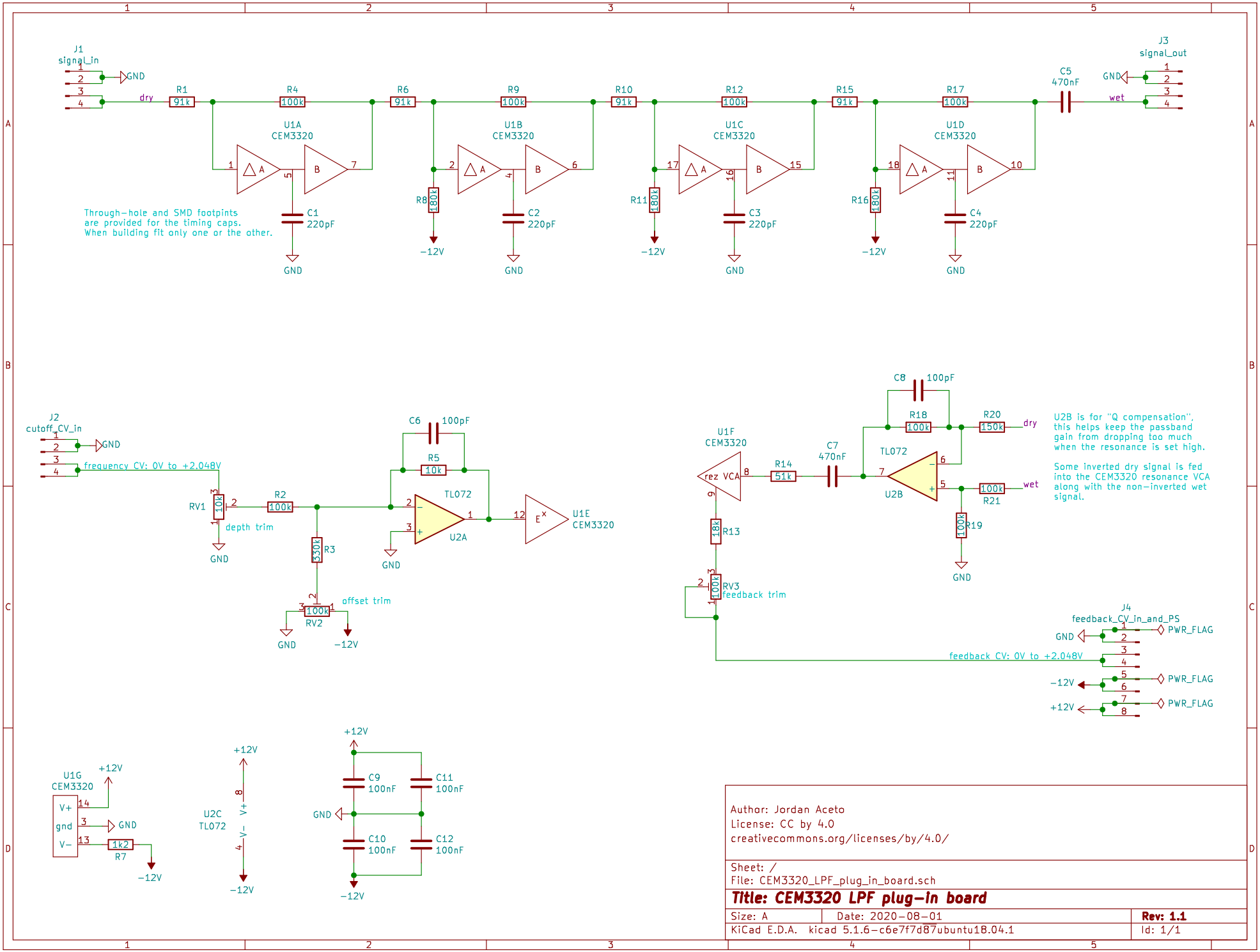

Author: Jordan Aceto
License: CC by 4.0
creativecommons.org/licenses/by/4.0/

Sheet: /
File: CEM3320_LPF_plug_in_board.sch

Title: CEM3320 LPF plug-in board

Size: A	Date: 2020-08-01	Rev: 1.1
KiCad E.D.A. kicad 5.1.6-c6e7f7d87ubuntu18.04.1		Id: 1/1