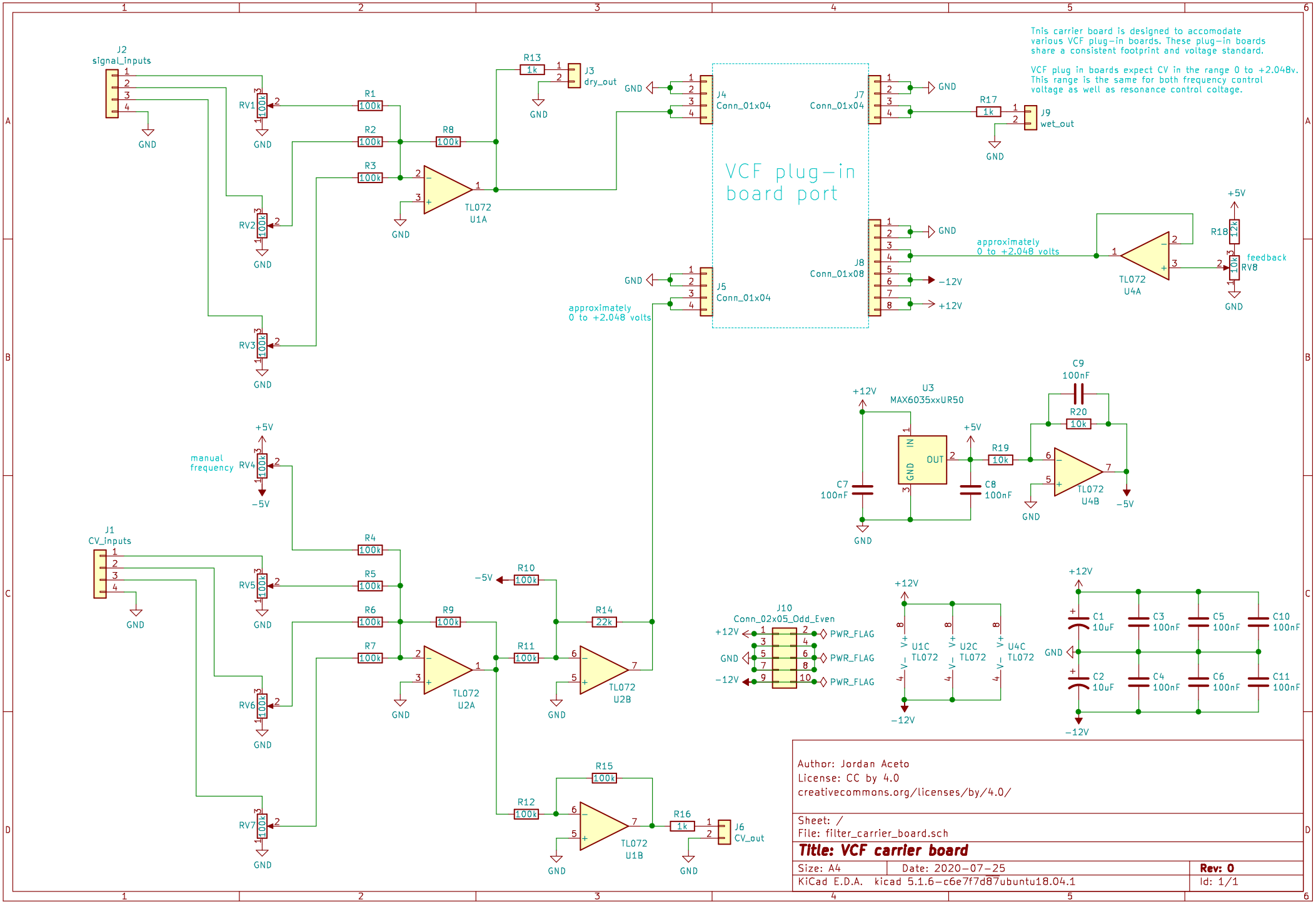
This carrier board is designed to accomodate various VCF plug-in boards. These plug-in boards share a consistent footprint and voltage standard.
VCF plug in boards expect CV in the range 0 to +2.048v. This range is the same for both frequency control voltage as well as resonance control coltage.
VCF plug-in board port
J2 signal_inputs
J1 CV_inputs
J3 dry_out
J4 Conn_01x04
J5 Conn_01x04
J6 CV_out
J7 Conn_01x04
J8 Conn_01x08
J9 wet_out
J10 Conn_02x05_Odd_Even
U3 MAX6035xxUR50
TL072 U1A
TL072 U2A
TL072 U2B
TL072 U1B
TL072 U4A
TL072 U4B
U1C TL072
U2C TL072
U4C TL072
manual frequency
approximately 0 to +2.048 volts
feedback
PWR_FLAG
GND
+5V
-5V
+12V
-12V
Author: Jordan Aceto
License: CC by 4.0
creativecommons.org/licenses/by/4.0/
Sheet: /
File: filter_carrier_board.sch
Title: VCF carrier board
Size: A4
Date: 2020-07-25
Rev: 0
KiCad E.D.A. kicad 5.1.6-c6e7f7d87ubuntu18.04.1
Id: 1/1