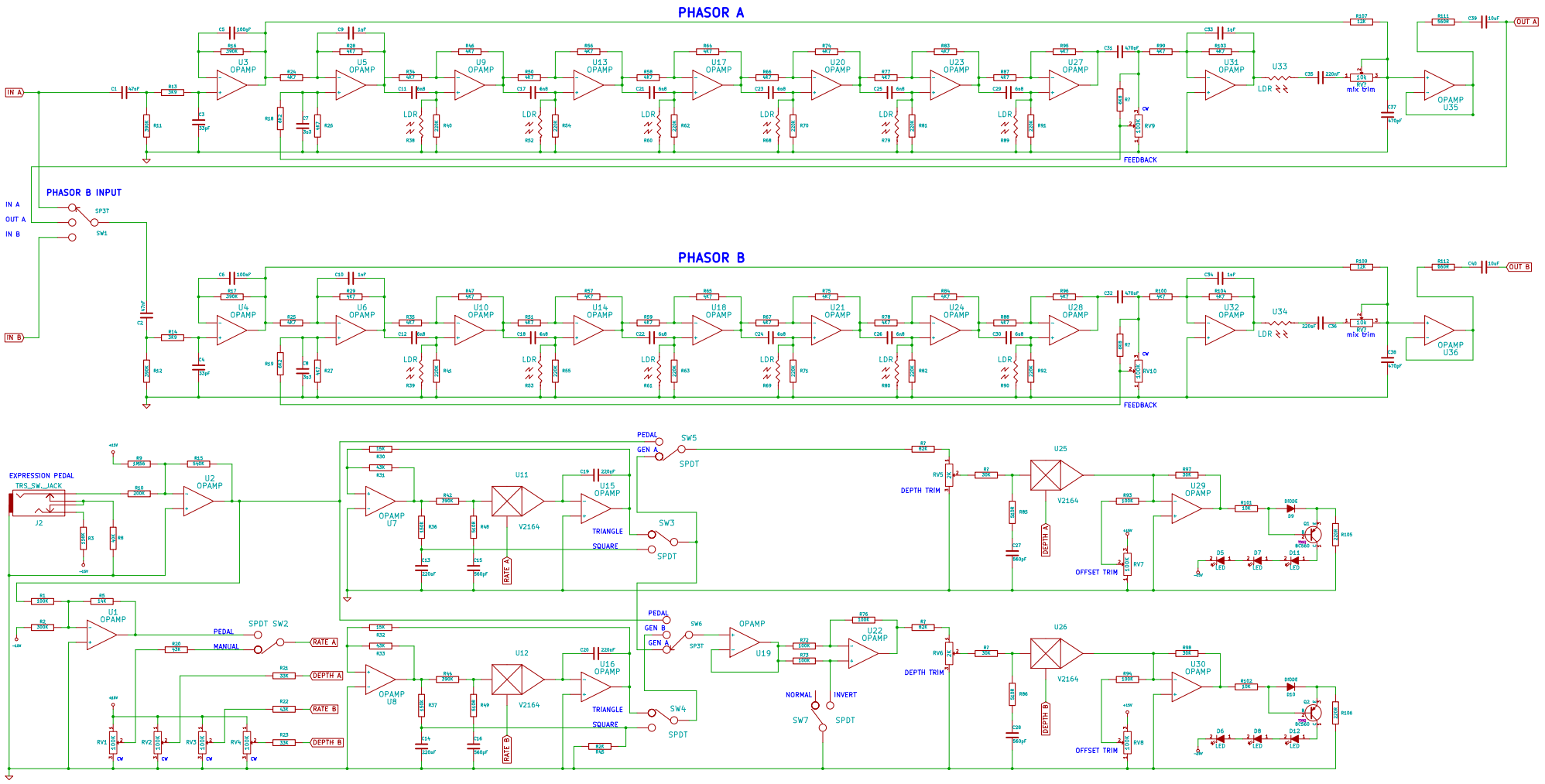

File: blPhase_2.sch	
Sheet: /	
Title: blPhasee.sch	
Size: C	Date: 15 dec 2018
KiCad E.D.A. eeschema (2013-07-07 BZR 4022)-stable	Rev:
	Id: 1/1