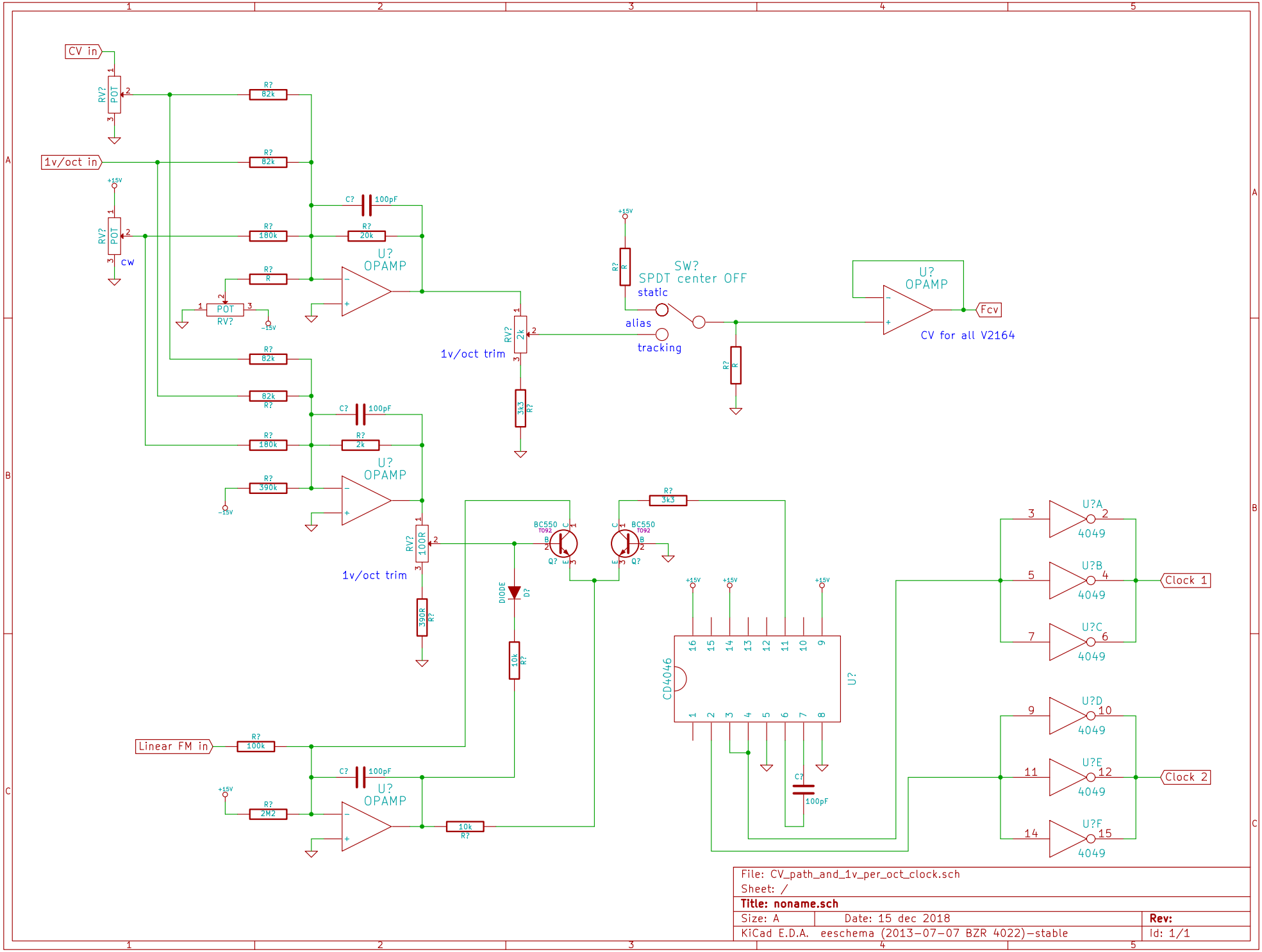

File: CV_path_and_1v_per_oct_clock.sch		
Sheet: /		
Title: noname.sch		
Size: A	Date: 15 dec 2018	**Rev:**
KiCad E.D.A. eeschema (2013-07-07 BZR 4022)-stable		Id: 1/1