Downloaded from ascelibrary.org by Mining World SA on 06/14/19. Copyright ASCE. For personal use only; all rights reserved.

sensor length. For optical fiber technology, sample intervals on the order of about 4 in. (0.1 m) are possible.

Distance precision describes the precision of the location of the measured point. For optical fiber measurements, this can be on the order of about 39 in. (1 m) or less.

Resolution is the smallest value or change in value that the measurement system to able to detect. Resolution has no relation to the accuracy of measurement. Current technology allows resolutions of about 0.1°C for temperature measurements and 1 to 2 microstrains for strain measurements. Techniques used to measure temperatures via optical fiber are similar.

Potential applications in dam engineering include measuring strains in tensile faces of concrete dams. To achieve this, a single length of fiber could be mounted across the dam face at different elevations. Other uses include measuring temperatures in concrete dams, particularly during early phases of concrete curing during peak thermogenesis; measuring distributed strains along tunnels and pipes; and real-time strain measurements of deflections during critical operations, such as first filling of a dam or for reservoir levels above design levels.

Inaudi and Glisic (2006) describe cases in which temperatures were monitored using fiber optic sensing for a 56-ft (17-m) high concrete dam raise on the Luzzone Dam (Switzerland) and bitumen joint monitoring at the Plavinu Dam (Latvia).

SOLUTIONS 4.0

5.3.5 Stress and Load

The most common types of instruments for measuring bearing or load stresses directly without first measuring strain and then multiplying by elastic constants are stress inclusions, total pressure cells, and flat jacks. Load cells are used to measure long-term loadings.

5.3.5.1 Stress Measurement.

Stress Inclusions. Stress inclusions are instruments designed to be used for measurement of stress changes in rock or concrete. They enable measurement of stress impacted on elastic rocks and concrete. They consist of a stiff steel annulus incorporating a vibrating-wire across its diameter, as shown in Fig. 5-32. The instrument is wedged into a small-diameter borehole, usually 1.5 in. (38 mm) in diameter, by means of a special installation tool that can be used at depths reaching 65 ft (20 m) or more. The wedge is located on one side of the steel annulus and a load-spreading shoe is diametrically opposed on the other side. The wedged instrument monitors changes of borehole diameter occurring parallel to this diameter.

Laboratory tests have shown that the wall thickness of the steel annulus is great enough for the wedged inclusion to behave as a stiff inclusion. In other words, its stiffness is high enough for its change of diameter to be

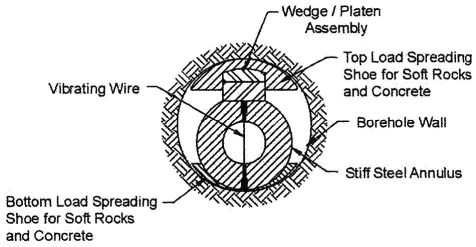

Fig. 5-32. Schematic of a vibrating-wire stress inclusion
Source: ASCE Task Committee on Instrumentation and Monitoring Dam Performance (2000).

directly related to the change of stress in the enclosing medium assuming that the Young's modulus of the medium is in the range of the usual values for rock and concrete. Commercial stress inclusions are available with different load-spreading shoes for either low-modulus or high-modulus rock and concrete. Correlation curves to assess change of stress are also available for different types of materials.

An alternative to the stiff stress inclusion is a strain-measuring cell of similar design but with thinner wall thickness. These also incorporate a vibrating wire along one diameter, but they behave as soft inclusions, meaning that they are used to measure the change of diameter of the hole in which they are installed caused by a change of stress in the host rock. Stress change is calculated from the measured strain and the formula for deformation of a circular hole in an elastic medium.

Total Pressure Cells and Concrete Stress Cells. Total pressure cells are commonly used to measure the earth pressures within fill and against concrete structures. Total pressure cells, also known as earth pressure cells, can be of two types: diaphragm or hydraulic. In a diaphragm cell, the load resulting from external pressure applied by a soil or fill deflects a circular steel plate that is supported at its periphery by a steel ring. The deflection of the plate is sensed on its inner side by a strain gauge (vibrating-wire or Carlson-type resistive). Diaphragm cells are best suited to situations where stresses on the diaphragm are uniform, without point loads or localized arching effects. They are less appropriate for earth pressure monitoring in embankment dams, where nonuniform loading can be expected as a result of granularity of the fill material and variations in its degree of compaction.

Hydraulic total pressure cells, a schematic of which is shown in Fig. 5-33A, are generally preferred for use in embankment dams because their design holds the potential of being less influenced by nonuniform loading. Hydraulic total pressure cells consist of two thin circular steel plates in the

Downloaded from ascelibrary.org by Mining World SA on 06/14/19. Copyright ASCE. For personal use only; all rights reserved.

range of 8 in. (20 cm) in diameter or more welded together at their periphery with a thin gap between them. The gap, not exceeding about 0.008 in. (0.2 mm) in thickness, is filled with a hydraulic fluid such as oil or glycol to form a "pressure pad." This pad is then connected by a steel tube, also filled with hydraulic fluid, to a pressure transducer using vibrating-wire or another sensing principle (Fig. 5-33B). Stress acting in the fill or concrete in a direction perpendicular to the pressure pad is transmitted to the hydraulic fluid through the steel plates and the resulting pressure is measured by the pressure transducer.

Hydraulic total pressure cells can be embedded in the fill of an embankment dam or in rock or concrete. In the latter case, they are often referred to as concrete stress cells and may have a rectangular shape instead of a circular one. The generally accepted interpretation is that the measured pressure is equal to the stress acting on the pressure pad. Although true in principle, experience has shown that a number of precautions must be taken for this interpretation to be valid, both in the design of the total pressure cell and in its installation.

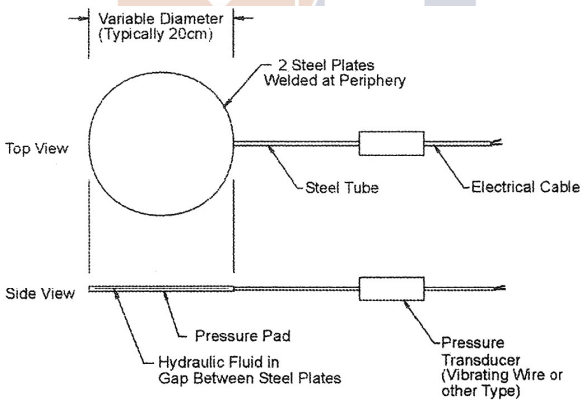

Fig. 5-33A. Hydraulic total pressure cell schematic
Source: ASCE Task Committee on Instrumentation and Monitoring Dam Performance (2000).

Fig. 5-33B. Hydraulic total pressure cell with vibrating-wire pressure transducer
Source: RST Instruments, reproduced with permission.

Downloaded from ascelibrary.org by Mining World SA on 06/14/19. Copyright ASCE. For personal use only; all rights reserved.

Downloaded from ascelibrary.org by Mining World SA on 06/14/19. Copyright ASCE. For personal use only; all rights reserved.

The stiffness of the pressure pad in the direction of the measured stress should be about the same as the stiffness of the medium in which it is embedded. In particular, the pad stiffness should not be significantly lower than that of the medium, as the soil would then create an arching effect in which the stress is transferred around the cell instead of acting on it. For this purpose, manufacturers can modify the width of the gap between plates to increase or decrease the thickness of the fluid layer and thereby adjust the overall stiffness of the cell. Total pressure cell stiffness is not a great concern for cells embedded in fill but is more important for rock or concrete because of their higher modulus.

Precautions pertaining to installation relate to the quality of the compaction around cells installed in fill. A common cause of total pressure cell readings that are difficult to interpret is poor compaction of the fill around the cell or a different degree of compaction than in fill compacted by mechanized equipment elsewhere in the dam. Portable compaction equipment must be used near the total pressure cells. Even so, the challenge is to achieve the same degree of compaction as with mechanized equipment and to verify it by appropriate compaction quality control tests. In spite of good construction practice, pressure cells have often provided strange and erroneous data.

As shown in Fig. 5-34, it is common to install total pressure cells in clusters of up to five at the same location. Best practice is to start with a flat, compacted fill surface and then excavate a trench with faces inclined at the angle to which the cells will be installed. The cells are then placed and the trenches backfilled and compacted with the original fill material (ISRM 1981).

For concrete stress cells, the main precaution is to restore contact between the plates of the pressure pad and the concrete after the concrete has cured and shrunk. For this purpose, the stress cell can be equipped during manufacture with a fluid-filled repressurization tube. The end of this tube is left protruding from the concrete after installation. After the concrete has cured, the repressurization tube is gradually compressed, forcing fluid into the cell, to inflate the pressure pad until full contact is restored with the concrete. The pressure transducer will show a pressure increase at the moment when the contact is reestablished.

Flat-Jack Testing. A flat jack is a thin bladder that can be pressurized with hydraulic oil. The instrument is made to be inserted into a mortar joint where a slot is formed to determine the in situ stress, the deformability, and the compressive strength. Flat-jack testing has been used for decades for in situ experiments in rocks and existing structures such as masonry buildings and concrete dams. This method initiates with cutting a slot into concrete. The displacement within a slot by cutting is then measured. Next, a flat jack is inserted into the slot, as shown in Fig. 5-35. The flat jack esti-

Downloaded from ascelibrary.org by Mining World SA on 06/14/19. Copyright ASCE. For personal use only; all rights reserved.

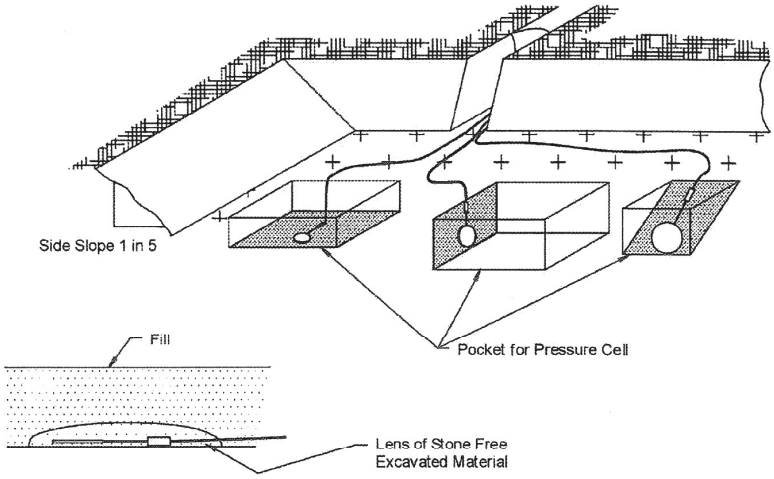

Fig. 5-34. Installation of total pressure cell cluster in fill
Source: ASCE Task Committee on Instrumentation and Monitoring Dam Performance (2000).

Fig. 5-35. Flat-jack testing device

mates stress using an oil pressure jack when the slot returns to its original width.

5.3.5.2 Load Measurement. Load cells measure long-term loads in tie-downs, tiebacks, posttensioned anchors, and rockbolts commonly used for improving the stability of a dam, its foundations, and abutments.

Increasing loads may be taken as an indication of rock movement or movement between the dam and its foundation, (i.e., of decreasing stability). Diminishing loads, on the other hand, may be an indication of anchor slippage and a need to retension the load member. A typical load cell installation is shown in Fig. 5-36. Load cells are also sometimes used to measure loads at the ends of piles and between structural members. Two predominant types are those using electrical resistance strain gauge sensors and those using vibrating-wire sensors. Less commonly used are hydraulic load cells.

Load Cells.

Electrical Resistance Load Cells. The most common style of strain gauge load cell is an annular ring-style electrical resistance cell, shown in Fig. 5-37. Strain gauges are attached to the outer periphery of the load-bearing annulus or cylinder and surrounded by a sealed protective cover. Greater accuracy (less influence from end effects) can be achieved by placing the strain gauges on either side of a shear beam. This latter design has the added advantage of being quite short in height.

Electrical resistance strain gauges may be connected together in a full Wheatstone bridge network. This has the advantage of combining the output from all the strain gauges, thus providing automatic averaging of eccentric and/or uneven loading.

Greater accuracy can also be obtained by using remote-sensing techniques to minimize cable effects. Input voltages at the strain gauges may fluctuate because of varying cable resistances caused by temperature changes, contact resistance changes, cable splicing, and other factors, altering the output voltages. Remote sensing eliminates the problem by using another pair of con-

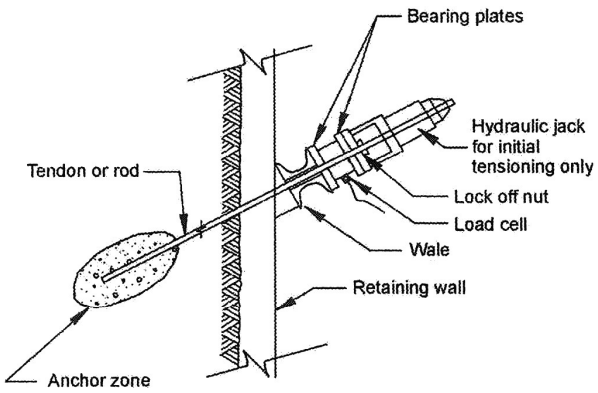

Fig. 5-36. Typical load cell installation on a tieback
Source: ASCE Task Committee on Instrumentation and Monitoring Dam Performance (2000).

Downloaded from ascelibrary.org by Mining World SA on 06/14/19. Copyright ASCE. For personal use only; all rights reserved.

Downloaded from ascelibrary.org by Mining World SA on 06/14/19. Copyright ASCE. For personal use only; all rights reserved.

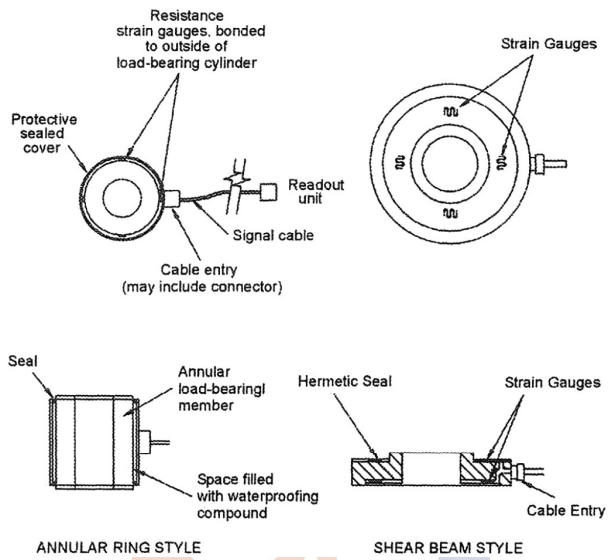

Fig. 5-37. Electrical resistance-type load cells (annular ring type)
Source: ASCE Task Committee on Instrumentation and Monitoring Dam Performance (2000).

© SOLUTIONS 40–50

ductors to measure the input voltage right at the load cell. The readout box is then set up to measure the ratio of input to output voltages.

Vibrating-Wire Load Cells. A typical vibrating-wire load cell is shown in Figs. 5-38A and 5-38B. Three or more vibrating-wire strain gauges are located inside holes drilled along the center of the annulus wall. To measure the load, each strain gauge must be read individually and the readings summed. In practice, it is common to see wide disparities in the output from individual sensors, which are caused by eccentric and uneven loading. In extreme cases, one or more sensors may go out of range and cease reading. The multiplicity of sensors increases the reading difficulty, although multiplexers are available. Multiplexers automatically cycle through the sensors and display an average or total reading on the readout box. Data loggers use additional channels but make the reading of multiple sensors much less difficult. Vibrating-wire load cells have demonstrated long-term stability and are useful when load monitoring is required over a period of several years.

Hydraulic Load Cells. Hydraulic load cells, shown in Fig. 5-39, are made by welding two steel plates together at their edges and leaving a gap between them to be filled with hydraulic fluid. Applied loads squeeze the plates together and build up a pressure in the fluid, which is measured by a Bourdon tube pressure gauge with a dial-type display and/or by an electrical pressure transducer. Bourdon tube gauges are much less accurate and

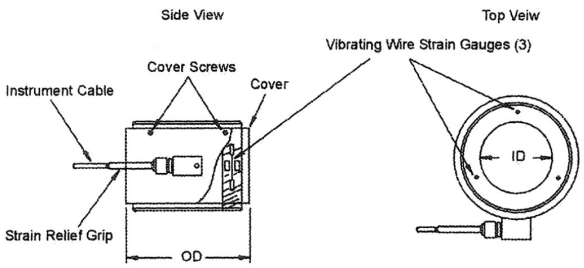

Fig. 5-38A. Vibrating-wire load cell schematic
Source: ASCE Task Committee on Instrumentation and Monitoring Dam Performance (2000).

Fig. 5-38B. Vibrating-wire load cell
Source: RST Instruments, reproduced with permission.

precise than pressure transducers. Also, it is necessary for the dial gauge to be clearly visible. In some situations, the simplicity of reading a load measurement directly from a dial gauge is a benefit.

Design Considerations. Load cells are typically annular or cylindrical in shape. Annular load cells have an internal diameter sufficient to fit around the tieback bolt or tendon bundle and an outer diameter large enough to provide the necessary bearing capacity. Less commonly used in dams is the shear beam type.

Over-Range Capacity. Because of the high probability of eccentric loading, load cells for tiebacks are designed so that the stress at the maximum design load is no more than 25% of the material yield stress (15% in the case of vibrating-wire load cells, where excessive loads could cause one or more of the vibrating-wire sensors to go completely slack and cease reading).

Downloaded from ascelibrary.org by Mining World SA on 06/14/19. Copyright ASCE. For personal use only; all rights reserved.

Downloaded from ascelibrary.org by Mining World SA on 06/14/19. Copyright ASCE. For personal use only; all rights reserved.

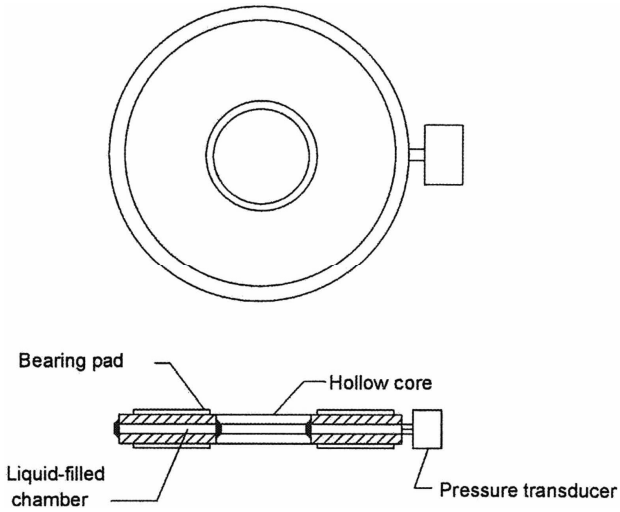

Fig. 5-39. Hydraulic load cell
Source: ASCE Task Committee on Instrumentation and Monitoring Dam Performance (2000).

Material. Materials used for load cells have high strength and high elastic modulus. Typical materials are high-strength alloy steel and aluminum. Titanium load cells have been tested successfully but are not commonly available.

Height. Shorter load cells of annular or cylindrical design suffer more from end effects. Load cells therefore need to be as long as possible consistent with space limitations and buckling propensities. An overall height-to-width ratio in the range of 1:1 to 2:1 is normal. For annular cells, the height-to-width ratio of the wall of the annulus normally falls in the range of 4:1 to 6:1.

Special designs, such as the shear beam type, allow shorter heights without sacrificing accuracy. For a given load capacity, these types of load cells have a larger diameter.

Temperature Effects. Vibrating-wire load cells temperature effects are minimized by matching the material of the sensor to the material of the cell itself so that the thermal coefficients of expansion match. Load cells with resistance strain gauge sensors automatically correct for temperature changes by using a temperature-compensated Wheatstone bridge. With hydraulic load cells, temperature changes cause expansion and contraction of the hydraulic fluid and may have a small effect on the load reading.

Waterproofing. Load cells need to be capable of operating while completely submerged in water. They are hermetically sealed or sealed by O-rings. Particular attention must be paid to any cable entry gland, which

must prevent water from entering the load cell, even if the cable jacket is cut or damaged. Additional waterproofing of the load cell is sometimes obtained by enclosing it inside a grease-filled box.

Electrical resistance-type load cells require the most rigorous waterproofing techniques, because the slightest amount of water penetrating the electric circuitry will render the load cell useless. Vibrating-wire types are more forgiving. The vibrating-wire sensors are themselves fully sealed, and, because their output is a frequency rather than a change of millivolts, they are relatively unaffected by moisture penetration into the wiring or connections.

Hydraulic load cells with non-electrical outputs are the least susceptible to moisture effects. Bourdon tube-type pressure gauges, if used, must be resistant to corrosion. Glycerin-filled types, made from stainless steel, are recommended.

Installation.

Bearing Plates. Loads are usually applied through steel bearing plates placed on both sides of a load cell. Bearing plates need to be big enough to cover the entire load-bearing surfaces of the load cell. Surface finish is not as important as flatness: a surface finish of 160 μm is sufficient as long as the plates are flat.

Load cells of electrical resistance or vibrating-wire types are very rigid. Consequently, any distortion of the bearing plate will cause uneven loading of the load cell and gross calibration errors. Plates cut from cold rolled steel are frequently warped and may become even more warped if any welding is performed on them. Therefore, load cells with bearing surfaces that are machined flat after cutting or welding are preferred.

Bearing plates can become warped because of the uneven surfaces of the structure being loaded. When this occurs, it is beneficial to smooth the surface using quick-setting cement or epoxy or by using layers of deformable material such as hard rubber or plastic sheets. If deformable material is used, it needs to be included in a laboratory calibration. If the bearing surfaces are not parallel, spherical seats or wedge-shaped shims are used.

Calibration. Calibration depends heavily on the way the load is applied. In the laboratory, loads are applied uniformly through flat, parallel platens. In the field, loads are applied through surfaces that are neither flat nor parallel and by hydraulic jacks which, because of a size mismatch with the load cell, may cause the bearing plates to either wrap around the load cell or push through the middle of it. Spherical seats and layers of lubricant or sheets of deformable material such as copper or plastic may be used to make the loading more uniform. Nevertheless, these factors can affect the calibration, such that load values in the field can differ from the laboratory calibrations by as much as 20%. To avoid these discrepancies, it is advisable to duplicate the field conditions in the testing machine by using the same

Downloaded from ascelibrary.org by Mining World SA on 06/14/19. Copyright ASCE. For personal use only; all rights reserved.

combination of bearing plates and jack as will be used in the field. Alternatively, a steel ring with the same dimensions as the jack may be used.

5.3.6 Temperature

Temperature measurements perform a variety of functions in monitoring the performance of dams. Many of the instruments discussed in this chapter have temperature sensors within them, allowing for correction of their temperature coefficient of output change. Concrete dams exhibit deformation from the temperature coefficient of expansion of the concrete itself. Rotations and displacements of concrete dams and appurtenant structures result from temperature changes caused by conductive heat transfer from the reservoir water, conductive heat transfer from the ambient air in contact with the dam, and radiative heat transfer from sunlight on the exposed concrete.

Temperature measurement devices, summarized in Table 5-2, are installed within concrete dams during construction for several reasons. Monitoring concrete temperature during placement indicates the rate of curing and the effectiveness of cooling, especially if cooling coils for cold water or ice are part of the design. Contraction joints in arch dams require grouting when the concrete cools sufficiently to allow the joints to open and accept grout. Grouting contraction joints in gravity dams also may require knowledge of the temperature within the dam body. Linking temperature to structural behavior promotes understanding of seasonal deflections.

Combined strain gauges and temperature sensors allow for correcting the temperature coefficient of strain in addition to measuring the temperature of the concrete. Temperature sensors are also used to locate seepage through embankments, foundations, and existing concrete dams. Temperature gauges (thermistors) integrated within piezometers can be used to detect reaction time to seasonal variations in reservoir temperature, which can be an indication of continuity of seepage paths within the embankment and the reservoir.

The most common temperature-measuring instruments are thermistors, thermocouples, resistance temperature detectors (RTDs), and Carlson instruments. Vibrating-wire and integrated circuit temperature sensors are also used although less frequently. Table 5-2 shows typical applications, the relative accuracy of the device, whether or not the device type is interchangeable with another device of the same part designation without a unique calibration, and the type(s) of signal conditioning required for measurement.

The accuracies of the devices presented in the table are stated in relative terms because families of devices having different accuracy specifications can be selected within each general type. However, each general type of device has an inherent accuracy limitation.

5.3.6.1 Thermistors. The salient characteristic of a thermistor, shown in Figs. 5-40 and 5-41, is that it has a very high temperature coefficient of

Downloaded from ascelibrary.org by Mining World SA on 06/14/19. Copyright ASCE. For personal use only; all rights reserved.

Downloaded from ascelibrary.org by Mining World SA on 06/14/19. Copyright ASCE. For personal use only; all rights reserved.

Table 5-2. Temperature Measurement Devices.

Device type	Where or how used	Relative accuracy	Device interchangeable?	Signal conditioning
Thermistor	(1) Within instruments for temperature compensation (2) seepage mapping on embankment dams	Medium	Yes	2-terminal resistance measurement
Resistance temperature detector (RTD)	(1) Concrete dams for construction and long-term monitoring (2) within instruments for temperature compensation	High	Yes	4-terminal resistance measurement or compensating quarter-bridge
Carlson instrument	Concrete dams for construction and long-term monitoring	Medium	No	4-terminal resistance measurement or compensating half-bridge
Thermocouple	RCC dams for construction monitoring	Low	Yes	Low-level voltage and a suitable thermocouple reference junction

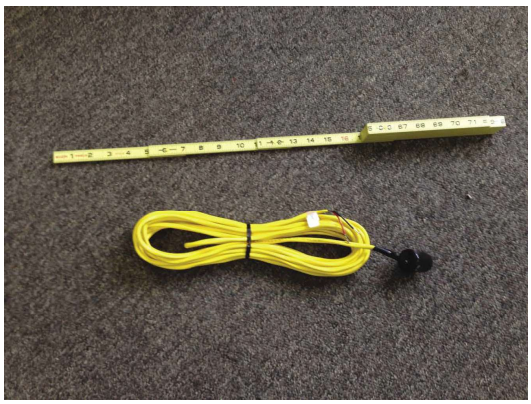

Fig. 5-40. Thermistor

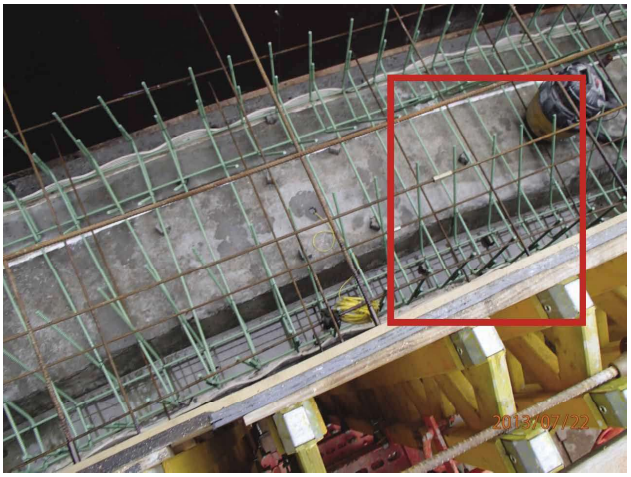

Fig. 5-41. Thermistor embedded in concrete dam

resistance. This high sensitivity makes the output from a thermistor easy to measure using a standard ohmmeter circuit with a 2-terminal connection. Because the nominal resistance of a thermistor at ambient temperatures is high compared with the lead wire resistance and the change in resistance with a change in temperature is also high, the error contribution from the initial resistance and the temperature coefficient of the lead wires is usually not significant. Another advantage of thermistors is that they operate without special signal-conditioning circuitry, which adds to their robustness and economy.

Table 5-2 indicates that interchangeable thermistors of the same part number will yield medium accuracy. Basically, this means that there is an

Downloaded from ascelibrary.org by Mining World SA on 06/14/19. Copyright ASCE. For personal use only; all rights reserved.

accuracy specification given for a particular thermistor model (0.18, 0.9, or 1.8°F, or 0.1, 0.5, 1°C), and devices do not have to be individually calibrated to achieve the accuracy stated by the manufacturer. Manufacturers of vibrating-wire piezometers often embed a thermistor in their instruments to measure the temperature of the surrounding ground water or to correct temperature-related errors of the instrument readings. The thermistor is an ideal device for this situation because it is very low cost and the piezometer manufacturer does not have to perform a special temperature calibration and can state the temperature accuracy specified by the thermistor manufacturer.

Multiple thermistors can also be assembled on a multiconductor cable, as illustrated in Fig. 5-42. Such multipoint thermistor cables are also called thermistor strings. Recently, digital thermistor strings have been developed that can bus up to 256 thermistor nodes on a single 4-conductor cable.

5.3.6.2 Resistance Temperature Sensors. An RTD is a general term for any device that senses temperature by measuring the change in the resistance of a material. RTD can be a term of confusion because it is logical to assume that any device that exhibits a stable temperature coefficient of resistance can be referred to as an RTD. However, in industry practice, RTD generally refers to a metal that is wound onto a ceramic mandrel or else laser-trimmed on a ceramic substrate. The RTD is precision trimmed in manufacture to a specific resistance at a reference temperature. The purity of the metal affects the characteristics and the long-term stability.

RTDs provide the highest accuracy among the four devices described here. The interchangeability error for platinum RTDs is lower than that of any other temperature sensor, and the usable range is appropriate for any dam instrumentation application. For stable long-term temperature mea-

Fig. 5-42. Multipoint thermistor string
Source: RST Instruments, reproduced with permission.

Downloaded from ascelibrary.org by Mining World SA on 06/14/19. Copyright ASCE. For personal use only; all rights reserved.

Downloaded from ascelibrary.org by Mining World SA on 06/14/19. Copyright ASCE. For personal use only; all rights reserved.

surements, platinum RTDs are the best performers. The main drawback is that the signal-conditioning requirements imposed on automated measurement systems makes the total instrumentation system more expensive. In the case of RTDs, unlike thermistors, the RTD resistance is relatively low, and the errors due to lead wire resistance must be eliminated. Lead-compensating bridge completion circuits or 4-terminal resistance measurements are required. Either of these signal-conditioning approaches requires more than one 2-wire data logger measurement channel for each RTD or signal-conditioning electronics at the sensor.

5.3.6.3 Carlson Instruments. Carlson instruments have been used for many years in concrete dams to measure temperature as well as strain. The primary purpose of the Carlson instrument is to measure strain over ranges that are larger than those that can be measured with bonded resistance-type strain gauges. Most contemporary concrete dam construction tends to use vibrating-wire strain gauges where Carlson instruments were formerly used. However, Carlson instruments are still used on many newly constructed concrete dams in developing countries, particularly where there is a local industry that supplies the instruments at lower cost.

The nickel–chromium alloy wire used in Carlson instruments has a fairly stable temperature coefficient of resistance, like the RTDs discussed previously. However, it is not as stable as platinum. Furthermore, Carlson instruments are not trimmed to a specific resistance at a reference temperature. To use Carlson instruments as temperature sensors, the calibration data for temperature are provided with each new instrument. Therefore, they are not interchangeable on measurement channels on a data recording system without also modifying the calibration constants used in data processing.

Carlson instruments have similar complexity in signal conditioning, as previously described for RTDs. The result is a more expensive implementation requirement for automated data acquisition.

5.3.6.4 Thermocouples. Unlike the other three devices, which sense temperature based on a temperature coefficient of resistance, thermocouples generate a voltage difference at the junction of two dissimilar metals that is a function of the junction temperature. Full-scale voltages generated by thermocouples are bipolar in the millivolt range. To achieve the specified accuracy, the measurement circuit must be able to measure accurately below the 10 mV level. In addition, the measurement circuit must include a thermocouple reference junction of known temperature, along with the circuitry and software to compute the compensation. Although thermocouples are relatively inexpensive and interchangeable, the signal-conditioning requirements include a thermocouple reference junction, and higher than usual demands are placed on precision measurement performance, particularly if the measuring unit must operate in outdoor temperatures.

Downloaded from ascelibrary.org by Mining World SA on 06/14/19. Copyright ASCE. For personal use only; all rights reserved.

The predominant use of thermocouples in dam instrumentation applications is to monitor temperatures of roller-compacted concrete (RCC) dams during construction. Thermocouples are the most widely used temperature sensors because of the wide selection of temperature ranges for different thermocouple types, and more specifically because many thermocouples can be used for very high process temperatures. However, this is not a reason to use them for monitoring RCC curing temperatures. The thermocouple for RCC monitoring is a Type T (copper-constant). The interchangeability accuracy for a Type T thermocouple is typically ±1.8°F (±1°C). The largest error contribution usually comes from the electronic reference junction simulation, which is a performance specification of the measurement system.

5.3.6.5 Other Devices. Other vibrating-wire devices and integrated circuit (IC) electronic temperature sensors are both used to a limited extent in dam monitoring. The characteristics of these devices are explained next.

Vibrating-Wire Devices. Some manufacturers have used vibrating-wire strain gauges and piezometers to measure the temperature of their surroundings by using the temperature coefficient of resistance of the excitation and/or pickup coil winding as an "RTD," which is not to be confused with the trimmed platinum RTD described previously. This method of temperature measurement is separate from the frequency measurement of the vibrating-wire gauge and requires an accurate resistance measurement to calculate temperature.

SOLUTIONS 4.0

Although uncommon in terms of usage, an entirely different technique is to employ the thermal expansion of a metal cylinder, isolated within an external housing, to modify the tension of the vibrating wire, and therefore its resonant frequency, in a predictable way. The manufacturer provides a calibration of frequency as a function of temperature. Such a device obviously cannot be used to measure pressure or strain because the sensing element is isolated from external forces.

Whether the vibrating-wire device is sensing temperature by the RTD method or the vibrating-wire method, each transducer is usually provided by the manufacturer with unique calibration coefficients or a calibration curve. The user must obtain the temperature accuracy statement for the device from the manufacturer.

Integrated Circuit Temperature Sensors. IC microchip-based sensors use microcircuitry and the temperature coefficient of silicon semiconductors to produce an output voltage that is directly proportional to temperature. Some IC temperature sensors contain an even higher level of circuit integration, producing the temperature as a digital signal that can be connected directly to microprocessor input/output ports.

Downloaded from ascelibrary.org by Mining World SA on 06/14/19. Copyright ASCE. For personal use only; all rights reserved.

These sensors are used in modern "intelligent instruments," particularly those with a requirement to automatically correct for temperature effects that would otherwise cause errors in the output of the instrument. In addition to temperature corrections, the temperatures of remote instruments and their surroundings can also be reported by an instrument that contains an IC temperature sensor. Therefore, these temperature sensors typically serve a dual purpose in geotechnical or structural instrumentation.

There are many variations of these devices, and their performance is somewhat dependent on how they are employed in the instrument circuit design. Generally, however, their accuracy is similar to that of a thermistor. However, the user does not usually interface directly with these devices because they are "embedded" components used by the manufacturer. Accuracy performance for temperature should therefore be obtained from the instrument maker and not from the IC temperature sensor data sheet.

5.3.7 Mass Movement (Nonstrain)

Movement occurs in all structures in response to internal and external loads. The movement discussed in this section refers to relatively large movements, which can be as high as several feet. The strain that was discussed previously in this chapter refers to small deformations. Monitoring movement may be required to answer a question about a dam's performance. Instruments for monitoring movement such as inclinometers and tiltmeters measure changes in angles. Relative vertical movements (settlement or heave) can also be measured by a variety of instruments, including leveling devices and extensometers, and relative horizontal movements can be measured by convergence and crack meters. Absolute horizontal and vertical movements are generally measured and monitored using the geodetic (survey) methods discussed in Chapter 6.

CE-SOLUTIONS 40-49

5.3.7.1 Inclinometers. There are two basic types of inclinometers: manual and in-place. Both require installation of specialized inclinometer casing. The casing is constructed with two pairs of longitudinal grooves at right angles along the interior surface of the pipe. The grooves prevent a tiltmeter (the inclinometer probe) from rotating when lowered into the pipe. The orientation of the grooves defines the azimuth (bearing) of measured deflections. Pipe sections are typically 10 ft (3 m) long, and sections of pipe are joined together using a coupling. Several coupling designs have been developed, ranging from pop-riveted slip couplings to proprietary self-locking connections.

Casing Installation. Inclinometers used in geotechnical engineering, shown in Figs. 5-43 and 5-44, are composed of tiltmeters with a fixed gauge length. They are used to monitor the lateral deflections of an inclinometer

Fig. 5-43. Inclinometer casing with self-locking connection
Source: RST Instruments, reproduced with permission.

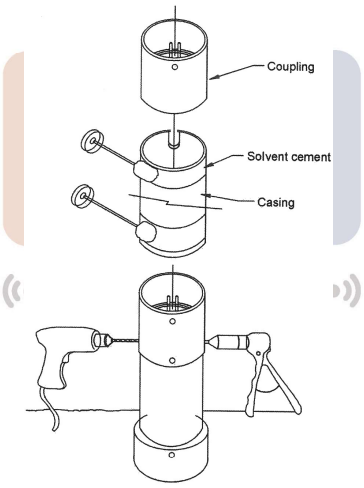

Fig. 5-44. Inclinometer casing with external coupling
Source: ASCE Task Committee on Instrumentation and Monitoring Dam Performance (2000).

casing in a borehole. Although a casing may be installed vertically, horizontally, or inclined, the majority of inclinometer surveys are conducted in vertical casings. Horizontal casings are used to measure settlement. Typically, a baseline survey is performed once the casing is installed. Subsequent surveys allow a determination of the rate of progressive lateral deflection of a borehole. Inclinometers have been used in slopes, embankments, sides of excavations, and concrete dams. Inclinometers are often used to detect sliding movement along weak planes in natural slopes and embankment

Downloaded from ascelibrary.org by Mining World SA on 06/14/19. Copyright ASCE. For personal use only; all rights reserved.

Downloaded from ascelibrary.org by Mining World SA on 06/14/19. Copyright ASCE. For personal use only; all rights reserved.

dams. Installed in the slopes around the reservoir, they can be used to monitor landslides.

Inclinometer casings are generally installed in a vertically drilled borehole with one set of diametrically-opposed grooves oriented downslope. However, an inclinometer casing may be installed in inclined boreholes to measure lateral displacement or in shallow level trenches to measure settlement. It can also be installed on the face of a dam, cast into concrete, or built up by adding sections as an earth fill is raised. Vertically installed casings are usually extended below the foundation of a dam into ground that is unlikely to move. The portion of the casing in nondeforming ground will serve to provide a fixed reference for subsequent surveys, eliminating the need for continued resurveying of the top of the casing.

To prevent buckling of the casing where settlement in excess of 1% is anticipated, telescoping couplings, shown in Fig. 5-45, are used to allow the inclinometer to move with the surrounding soil. Normal telescoping couplings between sections of casing can accommodate from 5 to 10% settlement. Specially designed telescoping casings can accommodate from 10 to 30% settlement.

Vertical inclinometers subjected to large horizontal strain often shear and can no longer be measured. Typical inclinometer casings allow a deflection curvature with a radius of approximately 6.5 to 10.5 ft, depending on the casing design, before they begin to shear. The corresponding horizontal deflection depends on the length of the deflection zone.

Inclinometer casings installed horizontally in trenches must be backfilled carefully with select fill to prevent damage. Horizontal installations are generally limited in length to 500 ft (about 150 m) if a manual inclinometer probe is used because the probe has to be pulled through the casing.

Inclinometer casings are sometimes installed on the upstream faces of concrete-faced rockfill dams and RCC dams to measure the deflection of the face. In this case, the casing is attached to the face of the dam or is embedded in the concrete face, sometimes with expansion joints or other provisions to accommodate thermal expansion and contraction.

Manual Inclinometers. An inclinometer probe, shown in Fig. 5-46, contains two gravity-referenced tilt sensors, oriented 90° apart, with each measuring the angle of the borehole casing with respect to the vertical. The probe has two sets of wheels that ride in grooves on the interior of the

Fig. 5-45. Telescopic inclinometer casing section
Source: RST Instruments, reproduced with permission.

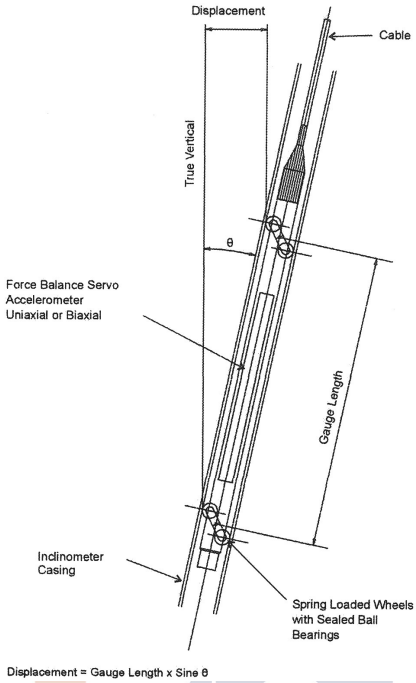

Fig. 5-46. Manual probe inclinometer
Source: ASCE Task Committee on Instrumentation and Monitoring Dam Performance (2000).

inclinometer casings. A wheel spacing of 2 ft (0.5 m) is standard and is referred to as the "gauge length."

Tilt sensors within a manual inclinometer probe are typically MEMS or force balance accelerometers; magnetostrictive and electrolytic sensors have also been used. The sensors are delicate and susceptible to damage and thus require regular recalibration. The typical recommendation from a manufacturer is recalibration every 12 months under moderate usage. Because they are solid-state components, MEMS sensors, shown in Fig. 5-47, are less susceptible to calibration degradation owing to shocks on the probe than other types of sensors.

The inclinometer probe is attached to a control cable that is used to excite the tilt sensors and to transmit the signal back to the readout unit. The cable is marked every 2 ft (0.5 m) to allow the probe to be quickly and repeatedly raised or lowered by its gauge length at successive readings during the survey. The other end of the cable is plugged into a readout unit. Older units display the readings only, requiring the user to manually record each reading. Modern readout units store recorded data in memory to eliminate written records and incorporate a display to visualize the inclinometer profile on-site and identify possible bad readings. This speeds up the survey pro-

Downloaded from ascelibrary.org by Mining World SA on 06/14/19. Copyright ASCE. For personal use only; all rights reserved.

Downloaded from ascelibrary.org by Mining World SA on 06/14/19. Copyright ASCE. For personal use only; all rights reserved.

Fig. 5-47. Digital MEMS inclinometer probe
Source: RST Instruments, reproduced with permission.

cess, eliminates errors in reading handwritten notes, and allows the survey data to be automatically transferred to a computer.

Manual inclinometer surveys are labor intensive, slow, and produce data that require additional processing. This method does not lend itself to real-time monitoring with the ability to automatically activate alarm systems if thresholds are exceeded. Manual surveys may be adequate in situations where little or no movement is expected and reading intervals are long. For projects with questions related to movement of a performance indicator, manual instruments may not be the best choice.

In-Place Inclinometers. An in-place inclinometer, shown in Fig. 5-48, consists of a series of individual inclinometer sensors installed at successive depths in an existing inclinometer casing in a borehole and connected by rods, which are typically 1.65, 3.3, 6.5, or 10 ft (0.5, 1, 2, or 3 m) long, thereby covering the entire length of the borehole and providing a continuous inclinometer profile. A string of in-place inclinometer sensors can also be suspended in an inclinometer casing at a depth of interest, (e.g., a depth at which a shear movement has already been identified by a traditional inclinometer survey using a manual inclinometer probe). Uniaxial in-place inclinometers (measuring tilt in one plane) and biaxial in-place inclinometers (measuring tilt in two orthogonal vertical planes) are available. In-place inclinometers can be installed horizontally, vertically, or inclined.

In-place inclinometers, consisting either of strings covering the full length of an inclinometer casing or strings suspended from the collar, can easily be removed periodically (e.g., yearly) to conduct complete inclinometer profiles with a manual inclinometer to confirm measurements. In-place inclinometer sensors can also be reused elsewhere after removal.

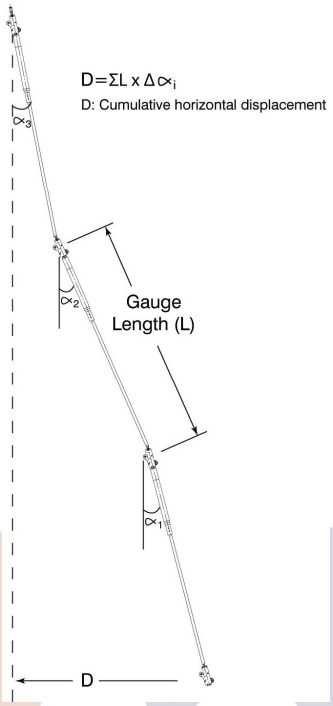

Fig. 5-48. In-place inclinometer
Source: RST Instruments, reproduced with permission.

MEMs, force balance accelerometers, electrolytic tilt sensors, and vibrating-wire sensors have been used in in-place inclinometers. Today, MEMS sensors are the most common as they are available in digital versions that allow them to bus many sensors in a borehole on a single signal cable, making installation and removal much easier.

In addition to greatly reducing the labor required to perform a survey, in-place inclinometers also allow the incorporation of ADASs, thus reducing data-acquisition errors and increasing the likelihood of capturing reliable profiles. ADASs may also be used to retrieve data remotely, and the system can be programmed to automatically and immediately send an alarm if a Threshold or Action Level is exceeded.

5.3.7.2 Shape Accelerometer Arrays. A shape accelerometer array (SAA), shown in Fig. 5-49, is similar to an in-place inclinometer. It consists of an assembly of long, typically 1.65 ft (0.5 m), slender rigid elements connected by special joints that allow bending in any direction. The members are fitted with triaxial MEMS sensors to measure tilt and acceleration. The

Downloaded from ascelibrary.org by Mining World SA on 06/14/19. Copyright ASCE. For personal use only; all rights reserved.

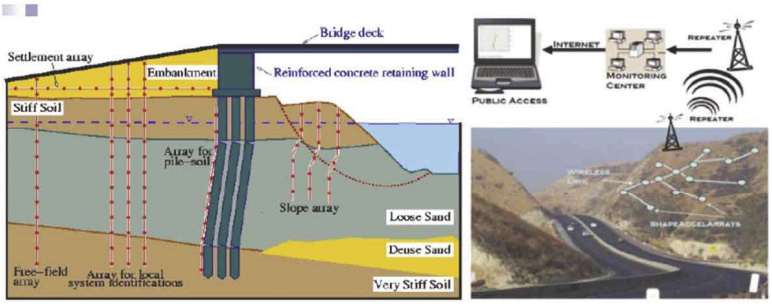

Fig. 5-49. Shape accelerometer array
Source: Bennett et al. (2007), reproduced with permission.

tilt data gained from SAAs are similar to data from a biaxial inclinometer, but SAAs are capable of deforming over much larger deformations than inclinometers. Typical arrays are installed in 1 in. (25 mm) PVC electrical conduits. The conduit can be installed in a borehole similar to an inclinometer casing or it may be fixed to a structural component. Provided that deformations are within allowed limits, the SAA assembly can be removed from the conduit and reused in another location. SAAs can readily be interfaced to a data logger and transmit measurements wirelessly.

SAAs can be installed horizontally, vertically, or inclined. The SAA does not extend or compress and is oriented perpendicular to the anticipated displacement direction.

There are several advantages to this system, which is starting to replace the use of an array of in-place inclinometers for monitoring the movement of an embankment slope. The SAA provides an adaptable, cost-effective means to monitor movement; however, installing several arrays of in-place inclinometers can become extremely expensive. Additional advantages over manual or in-place inclinometers include higher spatial resolution, larger tolerance to shearing, autonomous data collection and ease of calibration, reusable inexpensive casing, low installation and maintenance costs, and full automation.

5.3.7.3 Time-Domain Reflectometry. Time-domain reflectometry (TDR), shown in Fig. 5-50, has been used increasingly for monitoring settlement and slope stability in recent years, but dam-monitoring applications have been few. Originally developed to locate faults in communication and power lines, data collection consists of simply attaching an electronic cable tester to a coaxial cable grouted into a borehole and then taking a reading. The basic principle is similar to that of radar. An electrical pulse is sent down the coaxial cable. When the pulse encounters a break or necking, which causes an electrical impedance change, it is reflected. The reflection

Downloaded from ascelibrary.org by Mining World SA on 06/14/19. Copyright ASCE. For personal use only; all rights reserved.

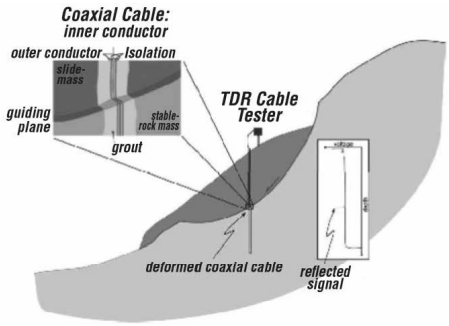

Fig. 5-50. Basic setup of TDR measuring site
Source: Thuro et al. (2007), reproduced with permission.

shows as a "spike" on a plot of reflected signal versus time (Kane 1998). Because the pulse velocity in the cable is known, the depth to the zone of deformation is easily determined, as illustrated in Fig. 5-50 (Thuro et al. 2007).

TDR monitoring is often used on critical slopes to determine the locations of shear planes and often has warning or alarm systems configured with the monitoring program. Cable placements are also oriented to monitor vertical deflections, settlement, or heaving. At present, TDR cannot easily identify the direction or magnitude of deformation, only its location along the cable. There are many factors affecting the correlation of measured impedance to shear deformation: cable strength, composition and diameter, soil and grout interaction, and signal attenuation. There are ongoing studies to develop reliable correlations. A good recommendation is to use TDR cables of the same type and same length in all boreholes of a given instrumentation program, if possible, so that a comparison between reflected signal magnitudes will at least allow qualitative ranking of the magnitude of the deformations in different boreholes.

A TDR cable can exhibit several reflected signals, which would be indicative of a number of deformation zones, as long as the external jacket of the cable does not become damaged and allow water ingress in the cable. The reflected signal becomes very high and unusable past the zone of water ingress. A cut coaxial cable provides a high reflected signal as well.

The advantages of TDR are simplicity, low cost, and rapid data collection. It takes only a few minutes to read any TDR cable, regardless of its length. Small-diameter boreholes and coaxial cable can be used. Half-inch (12.7 mm) coaxial cable is highly recommended because of its relatively low signal attenuation. The borehole is then grouted with no casing required. Used in conjunction with other monitoring instruments, TDR ground deformation monitoring systems can be a cost-effective way to supplement the complete monitoring program for dams and slopes.

Downloaded from ascelibrary.org by Mining World SA on 06/14/19. Copyright ASCE. For personal use only; all rights reserved.

Downloaded from ascelibrary.org by Mining World SA on 06/14/19. Copyright ASCE. For personal use only; all rights reserved.

5.3.7.4 Tiltmeters and Beam Sensors. Tiltmeters measure rotational movement using gravity as the reference datum. Tiltmeters, shown in Fig. 5-51, consist of a mounting bracket or plate and a tilt sensor in a housing that is attached to the mounting bracket. The tilt sensor and housing assembly are referred to as the "tiltmeter." When rigidly attached to a dam, a tiltmeter measures the rotation of the dam in the vicinity of the attachment point. Rotational movements occur when a dam is subjected to applied stresses, bending moments, or shears. These loads arise from reservoir pressures, thermoelastic expansion and contraction, volume changes from alkali–aggregate reactions, and other factors.

Tiltmeters are available in both uniaxial and biaxial versions. Uniaxial tiltmeters measure rotation in one vertical plane that is typically aligned with a principal direction in the dam, such as the upstream–downstream direction. Biaxial tiltmeters measure rotations in two orthogonal vertical planes and can therefore measure longitudinal and transverse rotations simultaneously.

Technologies used in the tiltmeter sensors have included force balance, electrolytic, ceramic, MEMS, and normal and inverted pendulum systems. Variations of the tiltmeter include portable tiltmeters, surface-mount tiltmeters, borehole tiltmeters, and submersible tiltmeters. Each of these is discussed in the following sections.

The rotation data provided by tiltmeters may be used directly to monitor bending and angular movements owing to settlement and to estimate

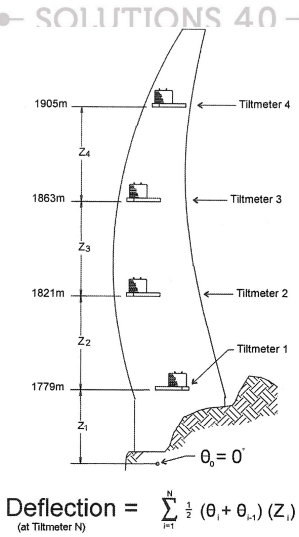

Fig. 5-51. Dam deflections from tiltmeter measurements
Source: ASCE Task Committee on Instrumentation and Monitoring Dam Performance (2000).

overturning forces. Displacements are calculated from tiltmeter data in a manner similar to that used in processing the data from inclinometers. Readings from a vertical array of tiltmeters installed in galleries or on a dam face may be incrementally summed to obtain a lateral displacement (deflection) profile (Dienum 1987). The same process may be used with an array of tiltmeters in a horizontal line to obtain vertical displacements resulting from settlement or other causes.

Because they are capable of very high precision, tiltmeters can detect and track small movements that are below the resolution threshold of some geodetic surveying techniques. Tiltmeters used in dams typically resolve movements of 1 μrad (0.2 arcsec) or smaller.

Surface-Mount Tiltmeters. Surface-mount tiltmeters, shown in Fig. 5-52, consist of a base plate, a sensor, and a readout device. They are installed on structural members or surfaces to measure the vertical rotation of the surface.

Most surface-mount tiltmeters incorporate a MEMS sensor, electrolytic tilt sensor, force balance accelerometer, or vibrating wire as the sensing element. These four types of sensing elements are described next.

In recent years, MEMS tiltmeters have gained considerable acceptance because of their low thermal sensitivity, excellent repeatability (7 arcsec), wide measuring range (±15°), which allows installation without the need to level the tiltmeter, and digital output, which makes it possible to bus several tiltmeters on a single signal cable.

Electrolytic tiltmeters, which have no mechanical moving parts, are the most rugged, offer the greatest precision (<0.1 arcsec = 0.5 μrad), and have good long-term stability.

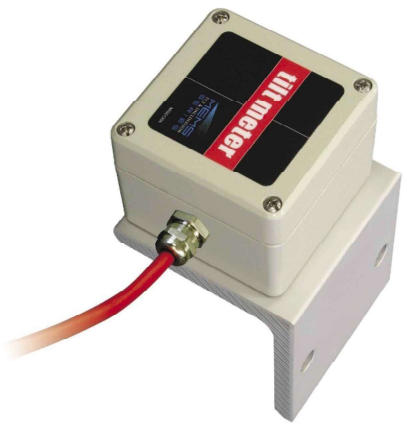

Fig. 5-52. Biaxial surface-mount MEMS tiltmeter (with vertical mounting bracket) Source: RST Instruments, reproduced with permission.

Downloaded from ascelibrary.org by Mining World SA on 06/14/19. Copyright ASCE. For personal use only; all rights reserved.

Downloaded from ascelibrary.org by Mining World SA on 06/14/19. Copyright ASCE. For personal use only; all rights reserved.

Force balance accelerometers output a voltage signal proportional to the sine of the tilt angle. High-gain units have a resolution of about 0.5 arcsec, a precision of 5–8 arcsec, and a range of ±1°. They have the highest power consumption of the four types, which is important if the tiltmeters are to be operated from batteries. They are also much more expensive than their counterparts.

Sensitive tiltmeters installed on structural members easily measure structural deformation caused by thermal expansion and contraction. If the expected thermoelastic strain and tilt of the structural concrete or steel are of the same order of magnitude as the measured tilt, thermoelastic movement is an important contributor to the measurement.

Several steps can be taken to minimize the temperature-induced output change of the tiltmeter itself. First, a tiltmeter with a temperature coefficient that is appropriate for the temperature changes that will occur at the installation point should be selected. Temperature fluctuations can be minimized by installing tiltmeters in the shade or providing a light-colored sun shield over each instrument. Mounting studs should be short and of equal length to minimize differential thermal expansion and contraction. If mounting brackets are used, they should be made as rigid and compact as possible. These considerations are especially important if the tiltmeters will be installed on the face of a dam, where temperature changes can be extreme.

Submersible Tiltmeters. Submersible tiltmeters, shown in Fig. 5-53, perform functions similar to those of dry surface-mount tiltmeters, but they are designed and constructed for use in submerged applications and under extreme hydrostatic pressures. Submersible tiltmeters gain ruggedness from

Fig. 5-53. Biaxial submersible MEMS tiltmeter (with horizontal mounting plate) Source: RST Instruments, reproduced with permission.

the design and construction of their housings and connections. Instrument housings are typically machined from a solid block of metal such as aluminum, stainless steel, or titanium. Connections are typically constructed of neoprene and are rated up to 10,000 psi (70 MPa).

Tilt measurements may be via electrolytic tilt sensors, ceramic tilt sensors, or MEMS. Uniaxial and biaxial versions are available. The dimensions of the housings vary, and variations are available for downhole installation and for use on pipelines. The instruments typically include temperature sensors.

Applications particular to submersible tiltmeters may include measuring tilt in deep layers of an earthen dam, the upstream face of a concrete dam, permanent or temporary cofferdams, foundations or substructures of offshore structures, or submerged pipelines.

Borehole Tiltmeters. Borehole tiltmeters, shown in Fig. 5-54, are installed in holes drilled in concrete, rock, and soils. They may be installed in dams, their abutments, and reservoir slopes. Borehole tiltmeters have long cylindrical bodies and are designed to be semipermanently sanded or permanently grouted into a borehole. Sanding consists of pouring and

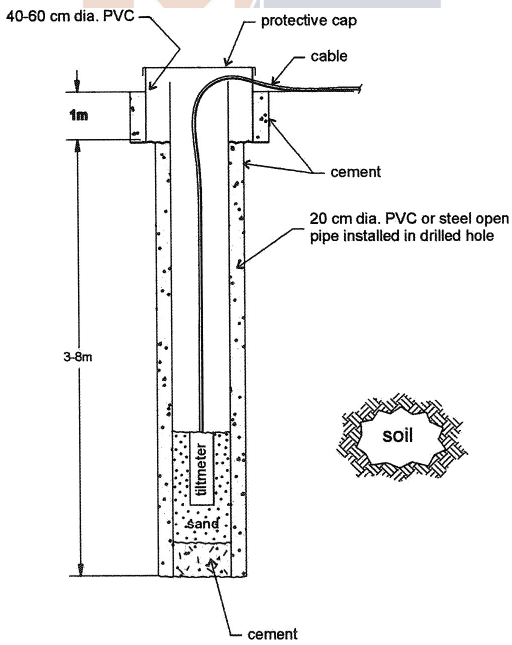

Fig. 5-54. Borehole tiltmeter installation in soil
Source: ASCE Task Committee on Instrumentation and Monitoring Dam Performance (2000).

Downloaded from ascelibrary.org by Mining World SA on 06/14/19. Copyright ASCE. For personal use only; all rights reserved.

Downloaded from ascelibrary.org by Mining World SA on 06/14/19. Copyright ASCE. For personal use only; all rights reserved.

compacting sand around the tiltmeter. This method is simple and fast and allows the tiltmeter to be retrieved at a later time. After an initial settling-in period of a few days to a few weeks, the installation becomes stable. Disturbance to the sand is always a possibility and may result from water-level changes in the hole, vibration (earthquake), or human intrusion. If disturbance is a concern, grouting the tiltmeter into the hole could be considered. Borehole tiltmeters must contain downhole signal-conditioning electronics for maximum output stability and signal quality. Because downhole temperatures are relatively constant, thermal effects are generally less important with borehole tiltmeters than with surface-mount tiltmeters. Most borehole tiltmeters in production today use electrolytic tilt sensors.

Portable Tiltmeters. A portable tiltmeter, shown in Fig. 5-55, is not fixed in place. Instead, an array of tilt plates is attached to the structure by epoxy cement or screws. The portable tiltmeter is then positioned on each of the tilt plates, one plate at a time, to take a set of readings. Currently, force balance accelerometer sensors and electrolytic tilt sensors are used in portable tiltmeters. This method has the advantage of reducing equipment costs, but it requires more labor to collect the data. It also is less precise than fixed-in-place tiltmeters because of errors associated with the repeated manual repositioning of the sensors.

Beam Sensors. Beam sensors, shown in Fig. 5-56, are a special type of tiltmeter in which a uniaxial sensor is mounted on a long beam, typically a square aluminum tube. The two ends of the beam are attached to the structure to be monitored. The beam sensor measures the rotation that

Fig. 5-55. Portable MEMS tiltmeter and tilt plate
Source: RST Instruments, reproduced with permission.

Downloaded from ascelibrary.org by Mining World SA on 06/14/19. Copyright ASCE. For personal use only; all rights reserved.

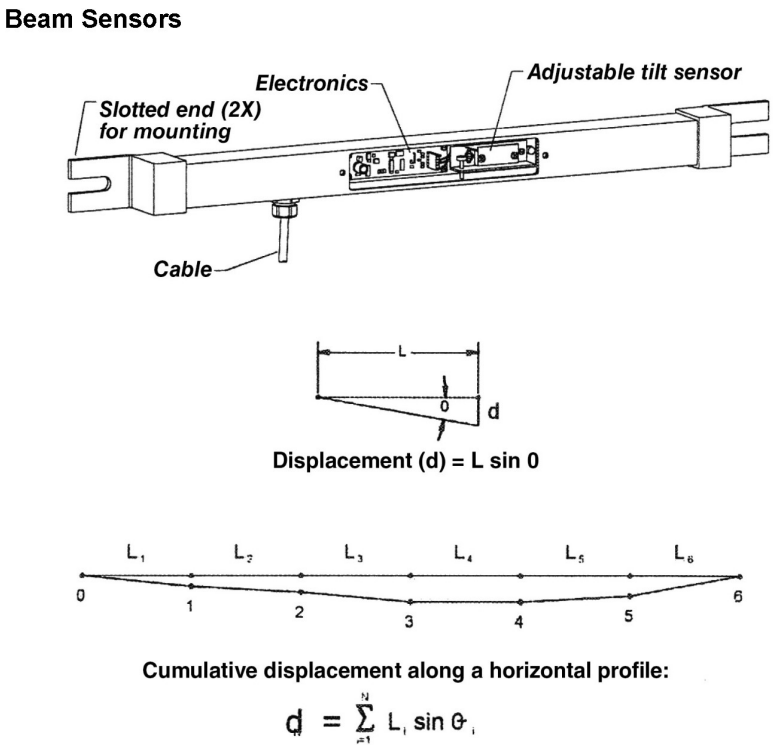

SOLUTIONS 4.0

Fig. 5-56. Beam sensor instrument and interpretation technique for a chain of sensors
Source: ASCE Task Committee on Instrumentation and Monitoring Dam Performance (2000).

occurs in a vertical plane between the two ends of the beam. The beams are typically installed horizontally to measure the vertical displacement of one end with respect to the other or vertically to measure the horizontal displacement of one end with respect to the other. A series of beams attached end-to-end can be used to compute deflections along a horizontal or vertical profile.

Most beam sensors in use today incorporate electrolytic tilt or MEMS sensors because of their relatively low cost compared to force balance accelerometers.

Plumblines and Inverted Pendulums. A plumbline is a gravity-referenced instrument. It consists of a few simple components: a stainless-steel wire attached to a fixed point, a weight, and a damping bucket containing a damping fluid, usually oil, to damp movements of the weight owing to wind, vibration, and air circulation. Plumblines, shown in Fig. 5-57, and

Downloaded from ascelibrary.org by Mining World SA on 06/14/19. Copyright ASCE. For personal use only; all rights reserved.

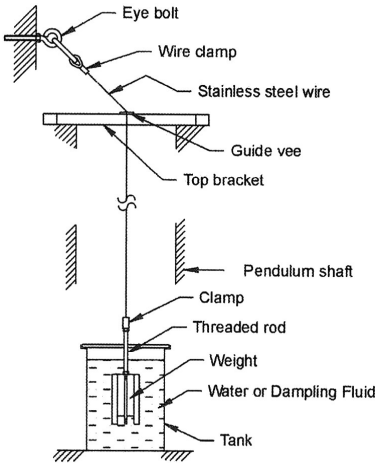

Fig. 5-57. Schematic diagram of a plumbline
Source: ASCE Task Committee on Instrumentation and Monitoring Dam Performance (2000).

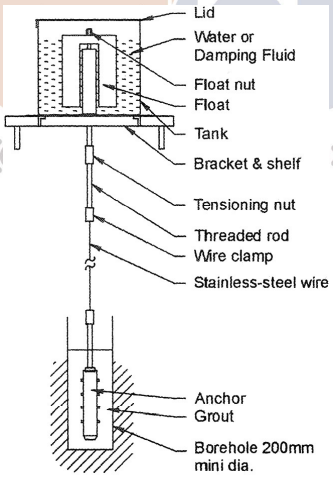

Fig. 5-58. Schematic diagram of an inverted pendulum
Source: ASCE Task Committee on Instrumentation and Monitoring Dam Performance (2000).

inverted pendulums are commonly used in concrete dams to measure changes in the verticality of the structure.

An inverted pendulum, shown in Fig. 5-58, differs from a plumbline in that it is anchored in a borehole in the foundation of the dam, which makes it necessary to locate a float and a damping bucket above the anchoring point.

Plumblines are usually installed in formed shafts extending vertically in the concrete of the dam, for example, from one service gallery level to the next one. Plumbline lengths usually do not exceed 165–260 ft (50–80 m) in a concrete dam. Longer plumblines have been used but are not recommended because of excessive vibration of the wire caused by wind and air circulation in the pendulum shaft. For taller dams, several plumblines can be installed in vertical alignment, one above the other, starting with an inverted pendulum anchored in the foundation, to obtain a complete profile of any change in verticality (Fig. 5-59).

Horizontal movements of the dam with respect to the plumbline wire, both in the upstream and downstream directions and in left bank–right bank directions, have traditionally been measured with mechanical measuring tables or by reading tables. Recently, electromechanical pendulum readout devices that connect plumblines and inverted pendulum systems to ADASs have become available, allowing real-time remote readings.

Mechanical measuring tables are available in several designs. One of them, illustrated in Fig. 5-60, consists of a horizontal metal console attached to the concrete wall of a small chamber through which the pendulum wire runs. The console is equipped with two sets of 3-point reference seats for seating a removable microscope frame, one set for each of the two horizontal directions of movement to be measured. The microscope, mounted on a traveling slide, is used to locate the wire with respect to a graduated scale. A resolution of 0.0008 in. (0.02 mm) and an accuracy of 0.004 in. (0.1 mm)

SOLUTIONS 4.0

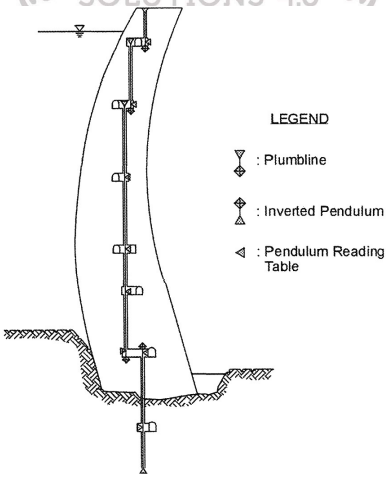

Fig. 5-59. String of several plumblines and one inverted pendulum installed in a concrete arch dam
Source: ASCE Task Committee on Instrumentation and Monitoring Dam Performance (2000).

Downloaded from ascelibrary.org by Mining World SA on 06/14/19. Copyright ASCE. For personal use only; all rights reserved.

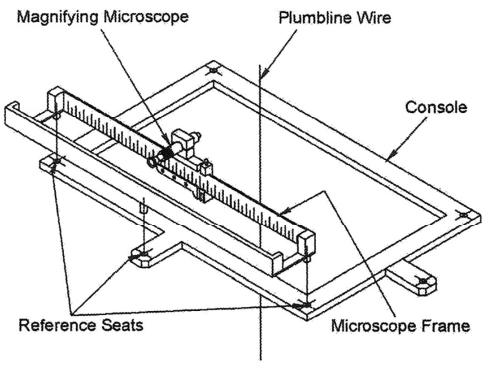

Fig. 5-60. Mechanical measuring table for plumbline wire with removable microscope frame
Source: ASCE Task Committee on Instrumentation and Monitoring Dam Performance (2000).

can normally be achieved with this type of measurement, although measurements to one-tenth of an inch are generally adequate for dam-performance monitoring.

Remote reading tables, often called telependulums, are of the noncontacting type, that is, the reading principle does not involve contact of the pendulum wire to a sensing plunger of any type that could interfere with the wire movement. Most remote reading tables today, examples of which are shown in Fig. 5-61, are based on induction with frequency output, capacitive, or on optical principles, which convert the pendulum wire displacement with respect to a frame into an electrical or a digital signal proportional to the displacement in two horizontal directions. Some reading tables also allow for reading the vertical displacement of the pendulum wire.

Remote reading tables based on optical principles incorporate a light source on one side of the wire, such that the shadow of the wire is projected onto a linear photodiode array attached to the table frame on the opposite side. Averaging techniques are then used to identify the photodiode pixels that receive the maximum light or, conversely, the minimum light so that the wire position with respect to the array can be known. Optical reading tables may be accurate to 0.0004–0.002 in. (0.01–0.05 mm). This type of reading table requires careful use because humidity or condensation on the wire or the photodiode array may compromise the accuracy of the readings. A heated cabinet is very often recommended for proper use of this table.

5.3.7.5 Settlement Gauges.

Borehole Extensometers. In its simplest configuration, a borehole extensometer comprises several basic components: an anchor, a rod, a flexible sleeve, a reference plate, and grout. After boring a hole, the

Downloaded from ascelibrary.org by Mining World SA on 06/14/19. Copyright ASCE. For personal use only; all rights reserved.

Fig. 5-61. Direct and inverted pendulums with optical telependulums

anchor/rod/sleeve assembly is constructed outside the hole. The assembly is then lowered into the hole and the anchor is grouted in place. After this is accomplished, the reference plate is set and the distance between the top (head) of the rod and the reference plate is measured. As the anchor settles with the soil or rock, the rod will be pulled down within the tube, and the distance between the reference plate and the head of the rod will change. For manual readings, the distance can be read with a dial indicator. More sophisticated designs add a vibrating-wire displacement transducer or linear potentiometer to automate readings and allow use of a real-time ADAS. Placing multiple rods in a single borehole with anchors at various elevations allows determination of the settlement of multiple points at a single location.

Several types of anchors are available for use, including grouted anchors, hydraulic anchors, and Borros anchors. A hydraulic anchor does not require grout and thus may also be useful for installation in an upward-directed borehole, such as at the roof of a tunnel in rock. The anchor is set in place by hydraulically inflating a bladder, which secures the anchor against the walls of the borehole.

Borehole extensometers are used in dam foundations and abutments to measure compression and extension movements. Such movements may be caused by the weight of the dam, stresses induced by reservoir filling, slippage along specific geological features, and other factors.

Borehole extensometers may be used to assess the compression of the foundation due to the load of the dam or to monitor extension or compression movement of specific joint, bedding plane, or geological features. In

Downloaded from ascelibrary.org by Mining World SA on 06/14/19. Copyright ASCE. For personal use only; all rights reserved.

special cases, they may be installed in holes drilled in existing concrete dams. They are also used to monitor settlement of embankment dams.

Borehole extensometers are either single-point, measuring the change of distance between a single anchor and a reference head, or multipoint, which incorporate several anchoring points within the borehole. In multipoint borehole extensometers (MPBX), each anchor point is separately connected to the reference head, allowing measurements of the change of distance between each anchoring point and the reference head. Some MPBX models, referred to as single-rod, incremental, or in-line MPBXs, feature a single rod along which the displacements of several anchoring points can be measured, whereas multirod MPBXs have a single rod connected to each anchoring point. These two types of MPBX are described further in the next section.

Multirod MPBX. Multirod-type MPBXs, shown in Fig. 5-62, are read either mechanically or electronically. A typical mechanical readout consists of a dial gauge to measure the distances between the ends of the extension rods and a stainless-steel reference plate.

For digital reading, electronic displacement transducers are attached to the rods and to the reference head at the collar of the hole. It is also possible to design the MPBX for both mechanical and electronic readings, as shown in Fig. 5-63. This is achieved by adding a reference tip to the displacement transducer and a reference surface at the top of the measurement head. A dial gauge set up on this surface is used to sense the reference tip.

SOLUTIONS 4.0

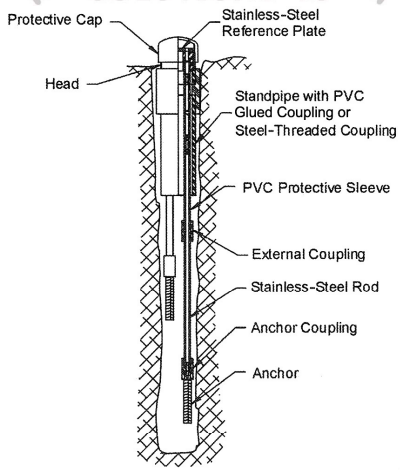

Fig. 5-62. Multirod borehole extensometer, mechanical version
Source: ASCE Task Committee on Instrumentation and Monitoring Dam Performance (2000).

Downloaded from ascelibrary.org by Mining World SA on 06/14/19. Copyright ASCE. For personal use only; all rights reserved.

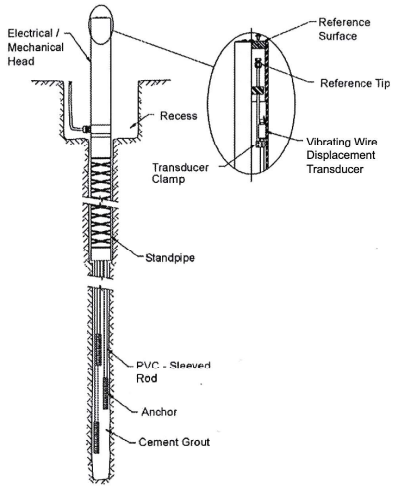

Fig. 5-63. Multirod borehole extensometer, combined electromechanical version Source: ASCE Task Committee on Instrumentation and Monitoring Dam Performance (2000).

Single-Rod (Incremental) MPBX. Single-rod MPBXs are alternative designs in which several displacement transducers are located in a single borehole, each separated from the next one by a length of rod or tubing. The main advantage of this design is that there is no electrical measuring head protruding out of the borehole, as is generally the case with a multirod MPBX. In cramped areas, such as small-diameter galleries, or for aesthetic or functional reasons, this can be an advantage. Single-rod MPBXs are often referred to as incremental or in-line extensometers because total displacement between the bottom anchor and the collar of the hole is equal to the sum of the relative displacements between the individual anchoring points.

Several single-rod MPBX designs are available. One design, illustrated in Fig. 5-64, uses submersible displacement transducers assembled in line with a stainless-steel rod covered by PVC tubing. Many transducers can be pre-assembled in line, inserted, and then grouted in a borehole. Alternatively, in case of highly fractured ground or when grouting is not the preferred anchoring method, hydraulic anchors can be used, as shown in Fig. 5-65. This type of extensometer can use a central steel rod with a 3/8 in. (9.5 mm) diameter or more and is therefore suitable to read both compression and extension movements. The total measurement range of the extensometer is the sum of the ranges of the individual transducers.

Another incremental MPBX model for use in concrete or rock is illustrated in Fig. 5-66. It consists of a series of mechanical anchors, connecting tubes, and centralizers installed one in front of the other in a borehole. The

Downloaded from ascelibrary.org by Mining World SA on 06/14/19. Copyright ASCE. For personal use only; all rights reserved.

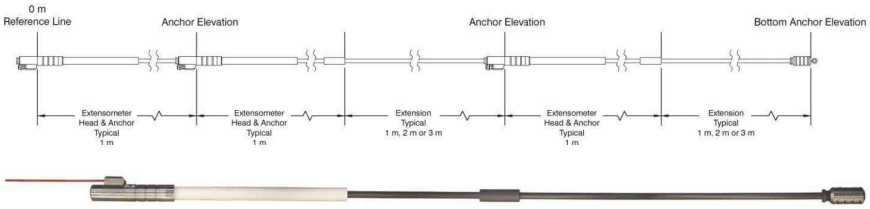

Fig. 5-64. Single-rod (incremental) multipoint borehole extensometer with grouted anchors
Source: RST Instruments, reproduced with permission.

Fig. 5-65. Hydraulic bladder anchor for highly fractured ground
Source: RST Instruments, reproduced with permission.

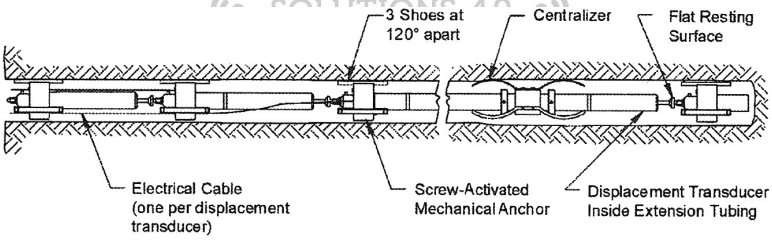

Fig. 5-66. Retrievable incremental multipoint borehole extensometer
Source: ASCE Task Committee on Instrumentation and Monitoring Dam Performance (2000).

anchors are screw-activated using an installation tool that is inserted into the borehole at the time of installation. Three anchor shoes expand in the radial direction to secure the anchor to the borehole wall. This anchoring mechanism allows the complete MPBX to be retrieved at a later time for reinstallation elsewhere. Each connecting tube incorporates a displacement transducer (LVDT or potentiometer), which is mounted longitudinally and has a flat surface at the tip of its spring-loaded feeler arm. During installation, this surface is placed in contact with the mechanical anchor. The feeler

Downloaded from ascelibrary.org by Mining World SA on 06/14/19. Copyright ASCE. For personal use only; all rights reserved.

arm is then compressed backward slightly to allow the transducer to measure both compression and extension movements in the borehole (Thompson et al. 1990).

Probe Extensometers. Probe extensometers consist of an array of targets positioned longitudinally along an access tube into which a probe can be lowered to sense the positions of the targets. The vertical access tube can either be located in a borehole or built into an embankment or fill as it is constructed. Depth readings from probe extensometer surveys are recorded by hand. The reading method is not compatible with monitoring by an ADAS.

Although the rod extensometers described earlier are intended to be permanently installed in boreholes, the sensor probe of a probe extensometer can be used for many boreholes. Also, although the measurement range of fixed extensometers is generally about 2–4 in. (5–10 cm), with some systems having a range of 8 in. (20 cm), probe extensometers can measure settlement greater than 3 ft (1 m).

Magnetic and inductive probe extensometers are not commonly used in the rock foundations and abutments of dams or in concrete dams because of the low resolution.

The working principle of probe extensometers is typically magnetic or inductive. Magnetic and inductive probes are similar in the sense that both types are located at the end of a graduated survey tape and are lowered into the access pipe from a reel. When the sensing element is adjacent to a target, an audible tone is emitted at the reel, which enables the operator to note and record the depth of the target. For magnetic systems, the targets consist of magnets in plate targets and datum targets that activate a reed switch located in the probe, as shown in Fig. 5-67. For inductive systems,

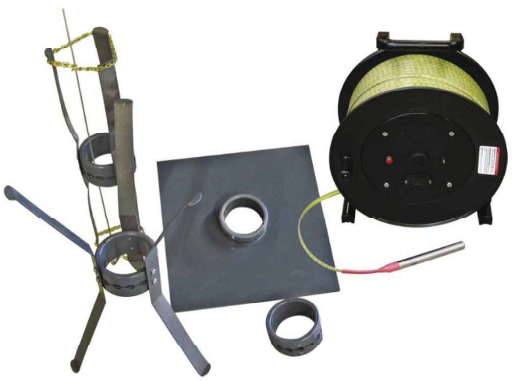

Fig. 5-67. Magnetic settlement system components: Spider targets, plate target, datum target, and reed switch probe
Source: RST Instruments, reproduced with permission.

Downloaded from ascelibrary.org by Mining World SA on 06/14/19. Copyright ASCE. For personal use only; all rights reserved.

stainless-steel wire rings or plates are used as targets, and the induction coil is contained in the probe.

Borros Heave/Settlement Points. Borros heave/settlement points, shown in Fig. 5-68, are mechanical assemblies used to measure vertical movements in soils and fills. The heave/settlement point consists of a three-prong anchor, a .25 in. (6 mm) inner riser pipe, and a 1 in. (25 mm) outer pipe.

The Borros point can be installed in a drilled hole or during fill construction by setting the anchor and adding extension lengths of inner riser pipe and outer pipe. Similar to a borehole extensometer, settlements are measured by observing or measuring the change of distance between the top ends of the inner and outer pipes.

USBR Settlement System. A USBR settlement system, shown in Fig. 5-69, consists of telescoping steel pipe sections with cross arms to anchor the system to the soil. Readings are taken by lowering a probe with spring-loaded fins into the pipe. The fins catch on the bottom end of the smaller-diameter pipe sections, and a tape attached to the tip of the probe gives the depth from the top of the installation. When the nose of the probe hits the

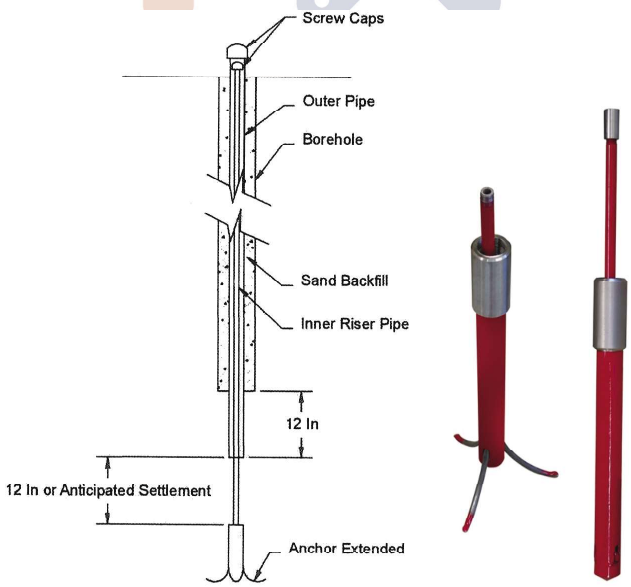

Fig. 5-68. Borros heave/settlement point. Schematic (left) and extended, retracted anchor (right)
Source: RST Instruments, reproduced with permission.

Downloaded from ascelibrary.org by Mining World SA on 06/14/19. Copyright ASCE. For personal use only; all rights reserved.

Fig. 5-69. U.S. Bureau of Reclamation settlement probe
Source: ASCE Task Committee on Instrumentation and Monitoring Dam Performance (2000).

bottom of the hole, the fins are retracted and the probe removed. This system is not in common use today.

Embedment Soil Strain Meter or Soil Extensometer. Long-baseline strain meters or extensometers, shown in Figs. 5-70A and 5-70B, are used in embankment and RCC dams to measure large deformations and cracking. The device incorporates a vibrating-wire displacement transducer, linear potentiometer, or LVDT inside telescoping plastic pipes designed to measure the relative movement of the two flanges at the ends of the pipes. Extensometers have been made up to 30 ft (10 m) long. Chains of them connected end-to-end have been positioned to obtain displacement profiles near the abutments of earth and rockfill dams and along their longitudinal and transversal axes. Chains of extensometers can also obtain profiles of cracking along the axes of RCC dams. These are also described under the strain section of this chapter.

Differential Settlement and Liquid-Level Gauges. Dam embankment and foundation settlement relative to a stable benchmark and differential settlement within the dam can be measured by a variety of hydraulic sensors. Differential settlements can also be measured using horizontal inclinometers and chains of beam sensors. The three principal hydraulic settlement measurement techniques are the

Downloaded from ascelibrary.org by Mining World SA on 06/14/19. Copyright ASCE. For personal use only; all rights reserved.

Downloaded from ascelibrary.org by Mining World SA on 06/14/19. Copyright ASCE. For personal use only; all rights reserved.

- Overflow technique, in which the elevation of a remote sensor is measured knowing that the water level in the two arms of a manometer are equal;
- Water-pressure technique, where the depth of the remote sensor below a known water level is calculated by measuring the water pressure at the sensor; and
- Water-level technique, in which a series of remote sensors is located in a more or less horizontal plane and their elevations are measured with respect to a common water level.

Overflow Technique. To use the overflow technique, shown in Figs. 5-71A and 5-71B, a sealed container is installed in the fill or concrete and connected to a readout station by three nylon tubes. One tube serves as a drain, another as a vent line, and a third is filled with de-aired water or antifreeze solution and connected at the readout location to a transparent, graduated standpipe. In operation, water is added to the standpipe until the water

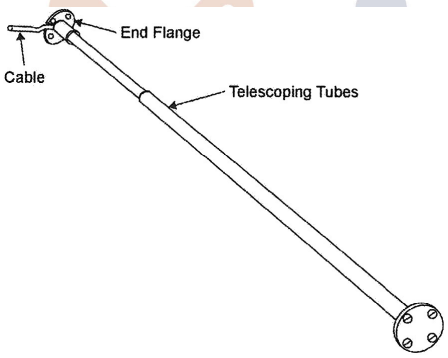

Fig. 5-70A. Soil extensometer schematic
Source: ASCE Task Committee on Instrumentation and Monitoring Dam Performance (2000).

Fig. 5-70B. Soil extensometer
Source: RST Instruments, reproduced with permission.

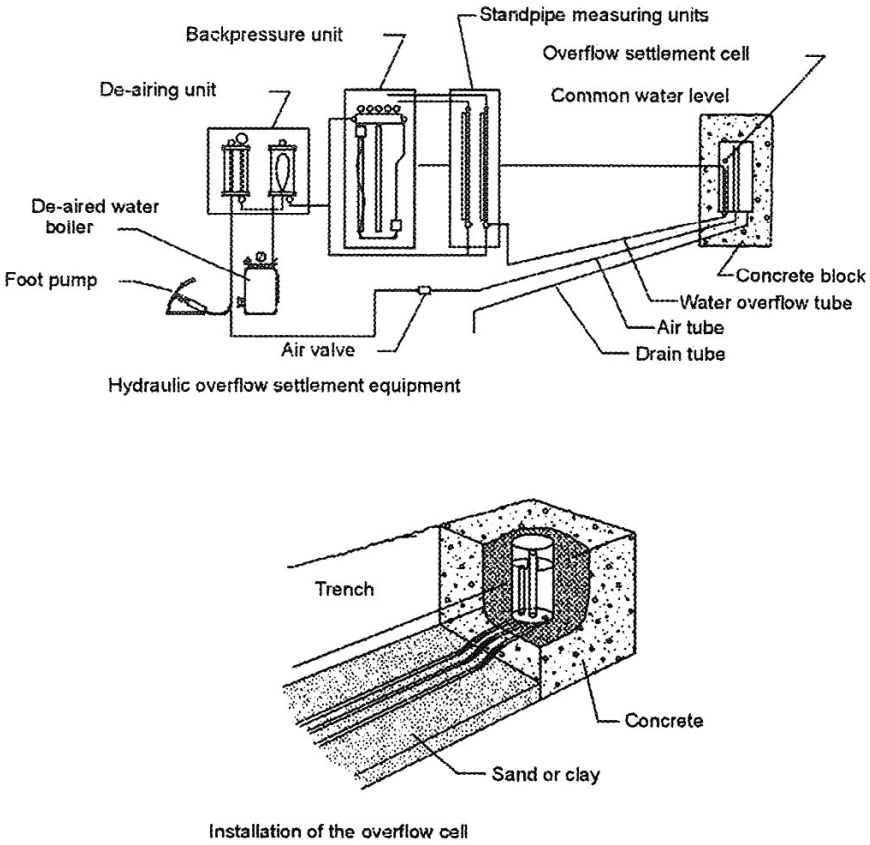

Fig. 5-71A. Hydraulic overflow settlement system
Source: ASCE Task Committee on Instrumentation and Monitoring Dam Performance (2000).

Fig. 5-71B. Hydraulic overflow settlement system installation in a CFRD dam
Source: RST Instruments, reproduced with permission.

Downloaded from ascelibrary.org by Mining World SA on 06/14/19. Copyright ASCE. For personal use only; all rights reserved.

Downloaded from ascelibrary.org by Mining World SA on 06/14/19. Copyright ASCE. For personal use only; all rights reserved.

flows over the lip of the overflow weir inside the sealed container. Excess water drains out of the container through the drain line, and the vent line ensures an equal air pressure on both ends of the liquid column. At overflow, the water level is read on the graduated standpipe. As the overflow cell settles, there will be a corresponding drop of the water level in the standpipe.

Accuracies in the range of 0.02 in. (5 mm) are attainable with this method. The advantage of the system is its inherent simplicity. However, there may be complications:

- The cell needs to be at about the same elevation as the readout location, and the range of settlement is generally restricted to the length of the standpipe, although the range can be extended using manometers and back-pressuring equipment;
- Care must be taken to maintain a constant grade on the tubing to provide free drainage and to prevent the formation of kinks or siphons where air bubbles can become trapped;
- The use of a de-aired fluid is usually necessary, although filtered water (reverse osmosis or other) or antifreeze has also been used successfully. Regular flushing may be required if the water becomes fouled;
- Temperature can affect the readings; and
- The system is difficult to automate.

Liquid Pressure Technique. A typical pressure settlement system is shown in Fig. 5-72. A reservoir is located on stable ground or at a point where its elevation can be easily surveyed. It is connected via two plastic tubes to a pressure sensor (either electrical or pneumatic) located at the point of settlement. The tubes are filled with de-aired water or antifreeze solution. As the sensor settles, the height of the liquid column increases, and the change in pressure is measured by the transducer. Reading this type of system is easily automated when an electrical pressure sensor is used. Twin tubes

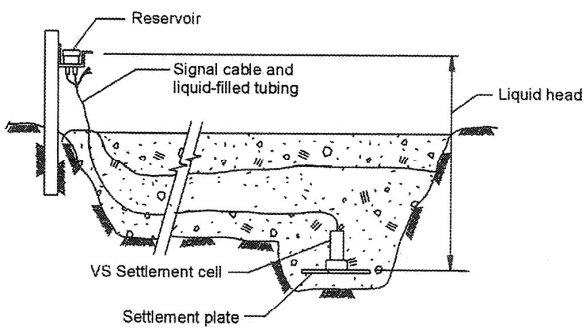

Fig. 5-72. Liquid pressure settlement system—standard type
Source: ASCE Task Committee on Instrumentation and Monitoring Dam Performance (2000).

permit the system to be flushed to purge any air bubbles that may have accumulated.

One advantage of the pressure settlement system is the potential for in situ transducer calibration; this is done by raising and lowering the reservoir. The zero-pressure reading can be calibrated by blowing the liquid out of the lines. With proper care, accuracies of ±0.2 in. (5 mm) are obtainable, although accuracies of ±0.4–0.8 in. (10–20 mm) are more typical. A disadvantage is the long horizontal run of tubing, which must be laid at a relatively constant grade to avoid air traps and which must be back-pressured or flushed periodically to remove air bubbles. Temperature changes of the fluid in the vertical tubing exiting the ground also affect the readings. If water is used, measures must be taken to prevent the growth of algae in the liquid lines.

A variation of the standard water pressure settlement system locates the pressure transducer either directly in bedrock or on a pipe attached to bedrock (Fig. 5-73). It is connected via a liquid-filled tube to the reservoir, which is directly over the transducer and is located at the point of interest. The advantage of this system is that it avoids the need for long horizontal tubing runs and does not require flushing. The disadvantage is that stable bedrock is required and must often be reached by drilling boreholes. Reading this type of system can be automated when an electrical pressure sensor is used.

Hydraulic Settlement Profilers - Standard Types. Another variation of the standard water pressure settlement system is the hydraulic settlement profiler, shown in Fig. 5-74. A pressure transducer inside a torpedo-shaped device is connected by a fluid-filled tube to a liquid reservoir. In use, the torpedo is pulled through an access pipe buried in the foundation or embankment.

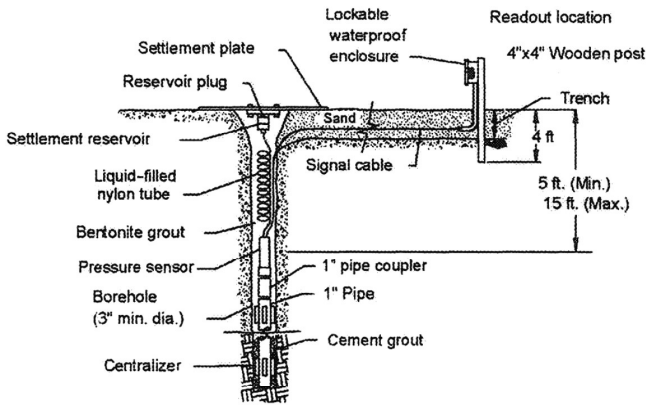

Fig. 5-73. Liquid pressure settlement system—bedrock type
Source: ASCE Task Committee on Instrumentation and Monitoring Dam Performance (2000).

Downloaded from ascelibrary.org by Mining World SA on 06/14/19. Copyright ASCE. For personal use only; all rights reserved.

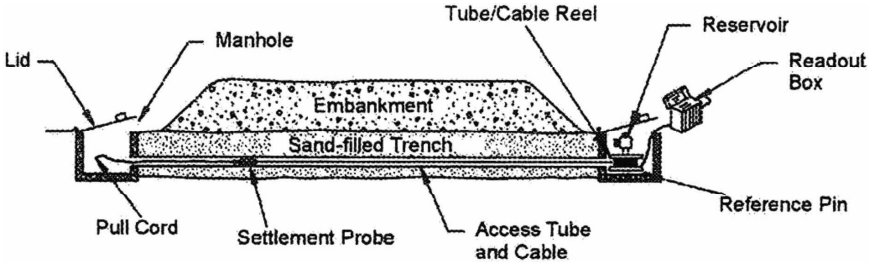

Fig. 5-74. Hydraulic settlement profiler
Source: ASCE Task Committee on Instrumentation and Monitoring Dam Performance (2000).

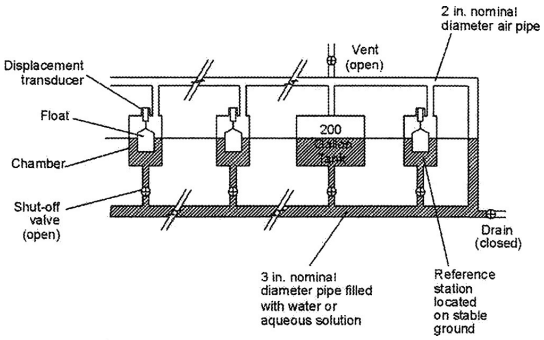

SOLUTIONS 4.0

Fig. 5-75. Liquid-level settlement system
Source: ASCE Task Committee on Instrumentation and Monitoring Dam Performance (2000).

The transducer records the height of the water column between the transducer level and the reservoir level and thus provides a measure of the elevation of the access tube at any point along its length.

The access pipe is open at both ends. If the access pipe dead-ends in the embankment, it is connected at its far end via a U-shaped joint to a second parallel access tube containing the pull-in cable.

A variation of this system is to fill the access pipe with water and pull the transducer through it, thus eliminating the fluid-filled tube. The hardware for this second type of system is somewhat simpler, but if the access pipe develops a leak, it may be impossible to fill with water.

Liquid-Level Technique. In comparison with the other techniques described in this section, greater accuracy and precision can be achieved using a liquid-level settlement system (Fig. 5-75). A series of chambers, all at the same elevation, is connected by a liquid-filled tube so that the water inside each chamber is at the same level. Ideally, one of the chambers should be located

Downloaded from ascelibrary.org by Mining World SA on 06/14/19. Copyright ASCE. For personal use only; all rights reserved.

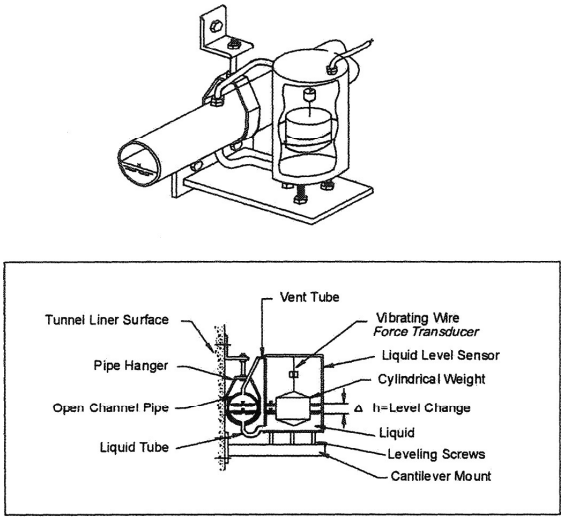

Fig. 5-76. Precision settlement system—water-level type
Source: ASCE Task Committee on Instrumentation and Monitoring Dam Performance (2000).

on solid ground that does not settle. Settlement of any chamber causes an apparent rise in the liquid level in that chamber, which is measured by an electronic displacement transducer attached to a float. A vent line connects the upper portions of all the chambers to equalize the air pressure above the liquid. Systems of this kind can have accuracies of ±0.04 in. (1 mm) and can be read by an ADAS.

An even more precise settlement monitoring system can be made using another water-level technique illustrated in Fig. 5-76. This system uses a 3 in. (76.2 mm) diameter horizontal pipe that is half-filled with water or antifreeze solution. This pipe can be fixed to the wall of an underground gallery running in the dam embankment. At intervals along the pipe are a series of chambers connected hydraulically to the pipe, so that the water level in the chamber is at the same level as the water inside the pipe. The water level in the chamber is measured by a vibrating-wire force transducer, which consists of a weight hanging from the vibrating-wire and is partially submerged in the water so that changes in water level alter the buoyancy force on the weight and the tension in the wire. Settlement of any chamber produces an apparent rise of water level in that chamber. Systems of this kind can measure settlements of as little as 0.001 in. (0.025 mm).

Maintenance of Liquid-Filled Settlement Systems. Hydraulic systems suffer mainly from air bubbles in the liquid-filled tubes and to a lesser extent from blockages in the tubes caused by the growth of algae and bacteria. To minimize these problems, the following measures are recommended:

Downloaded from ascelibrary.org by Mining World SA on 06/14/19. Copyright ASCE. For personal use only; all rights reserved.

Downloaded from ascelibrary.org by Mining World SA on 06/14/19. Copyright ASCE. For personal use only; all rights reserved.

- Use de-aired water or antifreeze.
- Use distilled water rather than tap water.
- Dissolve chlorine bleach or small amounts of copper sulfate (one 6-mm crystal per 10 L) in the water to retard bacteria and algae growth (antifreeze solutions are already toxic to bacteria and algae).
- Use a wetting agent (nonfoaming) to reduce surface tension.
- Use twin tubes rather than a single tube so that the system can be flushed.
- Apply backpressure to water-pressure settlement systems to keep air bubbles in suspension, reducing the need for de-airing. Backpressure must then be measured and deducted from the readings.

5.3.7.6 Convergence Meters. Convergence meters are used to measure the change of distance between two points located on the walls of underground openings or at the surface of concrete or rock structures. They can be removable or nonremovable. Removable convergence meters are usually called tape extensometers, shown in Fig. 5-77, and comprise the following components: an extensometer head that applies a constant tension to the tape and includes a dial indicator graduated to 0.0004 in. (0.01 mm), a measuring tape attached to the extensometer, and anchored reference points. The overall repeatability of tape extensometer measurements, however, is reduced in practice to about 0.01 in. because of variations in tensioning the tape each time measurements are taken and in connecting and removing the tape to the eye-bolt anchors.

Recent advances in laser distance measurement technology have been used to develop laser extensometers, shown in Fig. 5-78, which can measure the distance between a reference anchor point to which the laser is temporarily mounted and a number of reflective monitoring points around the perimeter of the underground opening with high repeatability [typically 0.0125 in. (0.3 mm)]. The main advantage of a laser extensometer is that manual manipulation, which poses a difficulty for tape extensometer measurements, is not required.

Fixed convergence meters, shown in Fig. 5-79, are prop-up instruments that rest against the two surfaces between which convergence is to be measured.

5.3.7.7 Joint Meters and Crack Meters. Cracking in concrete dams may result from many factors: differential settlements of the foundation, elevated temperatures during concrete curing, shrinkage and swelling with changes in moisture content, alkali–aggregate reaction (AAR), and changes in reservoir levels. Attempts are made to control this cracking by inducing it to occur along construction joints, which may be sealed using water stops or grouted shut at a later date. In earth dams, as a result of differential settlements,

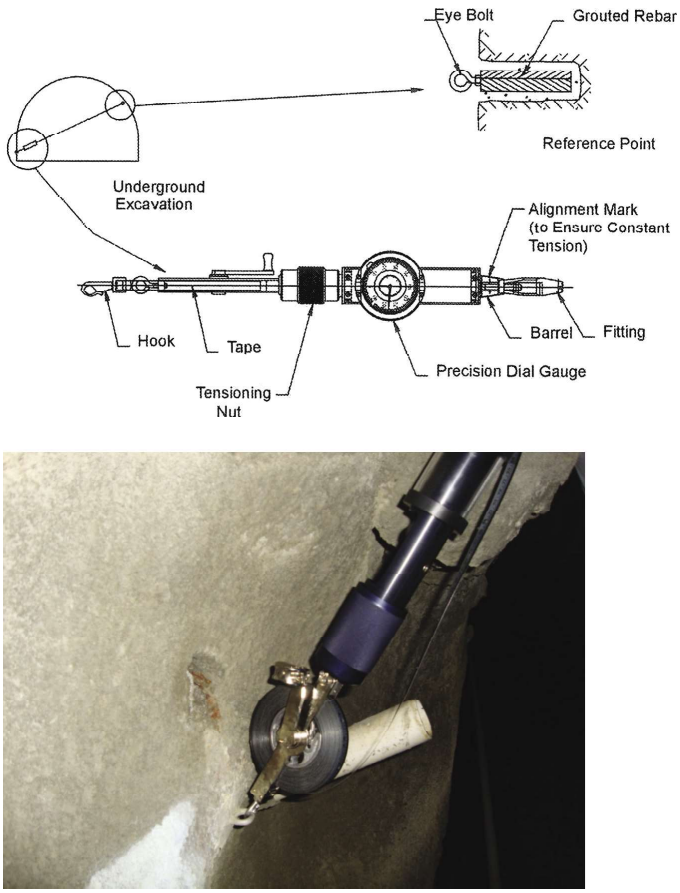

Fig. 5-77. Measurement with tape extensometer

zones of high shear or tension can cause cracking, especially at the abutments. Many types of crack meters exist for manual or remote monitoring of both surface cracks and interior cracks in one, two, or three dimensions. Instruments known as joint meters are used to monitor the opening or closing of construction joints.

Manual Crack Meters. A simple crack meter is made by Avongard, shown in Fig. 5-80. Two plates overlap for part of their length. The bottom plate is fixed to one side of the crack and bears a grid pattern calibrated in millimeters. The overlapping upper plate, fixed to the other side of the crack, is transparent and is marked with a crosshair. As the crack opens and closes or shears in the plane of the surface, the amount of movement is shown by the position of the crosshair above the underlying grid.

Downloaded from ascelibrary.org by Mining World SA on 06/14/19. Copyright ASCE. For personal use only; all rights reserved.

Downloaded from ascelibrary.org by Mining World SA on 06/14/19. Copyright ASCE. For personal use only; all rights reserved.

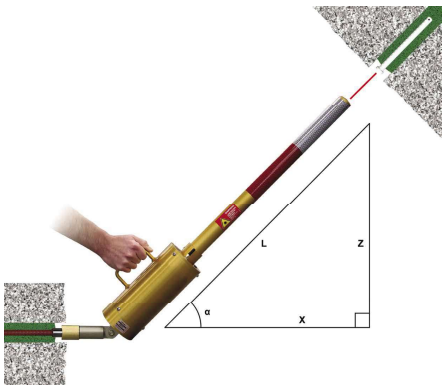

Fig. 5-78. Laser extensometer for convergence measurement
Source: RST Instruments, reproduced with permission.

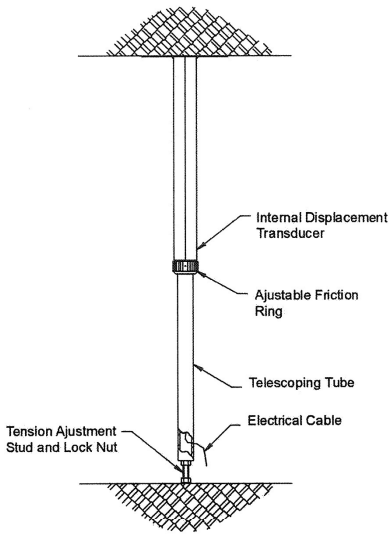

Fig. 5-79. Prop-up convergence meter
Source: ASCE Task Committee on Instrumentation and Monitoring Dam Performance (2000).

Movement of surface cracks or joints can be monitored in three dimensions using a dial indicator and a block system. A portable dial gauge is inserted into the openings to measure the gap between the two blocks in three orthogonal directions. The advantages of manual crack meters are their simplicity, low cost, and ease of use; disadvantages include the lack of real-time, continuous, automatic readings. A manual 3D crack meter,

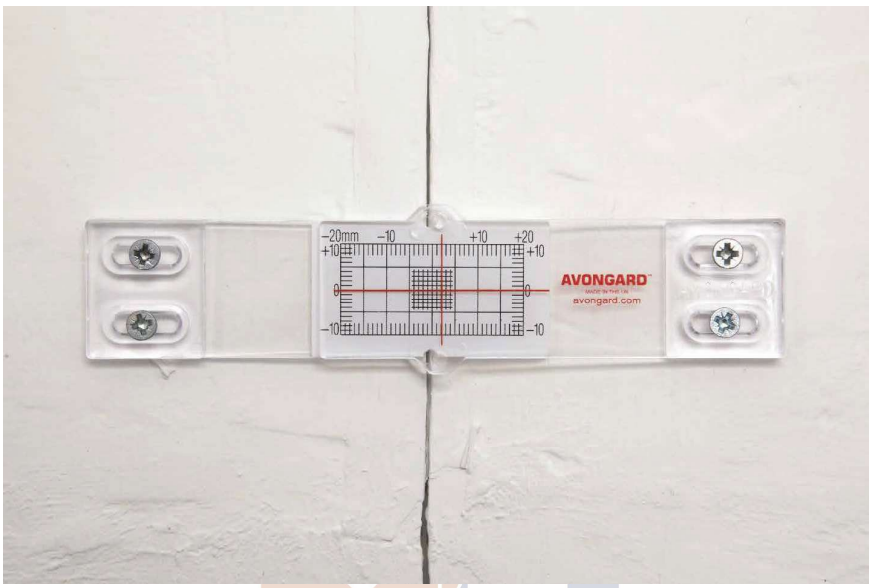

Fig. 5-80. Telltale crack meter
Source: Avongard.com, reproduced with permission.

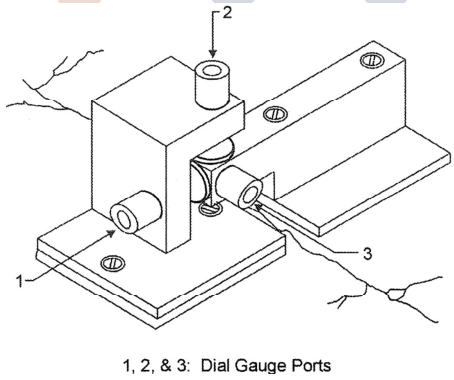

Fig. 5-81. Manual 3D crack meter
Source: ASCE Task Committee on Instrumentation and Monitoring Dam Performance (2000).

shown in Fig. 5-81, can be automated by the addition of displacement sensors, overcoming the disadvantages of simple manual crack meters. The sensors can be of the vibrating-wire, linear potentiometer, or LVDT type. The major advantage of implementing electronics is the potential for continuous, real-time, remote sensing and recording.

Downloaded from ascelibrary.org by Mining World SA on 06/14/19. Copyright ASCE. For personal use only; all rights reserved.

Downloaded from ascelibrary.org by Mining World SA on 06/14/19. Copyright ASCE. For personal use only; all rights reserved.

Electronic Crack Meters. A simple one-dimensional electronic crack meter is shown in Fig. 5-82. The meter is designed to be held by lag bolts or anchors drilled into the concrete or masonry on either side of the crack. The crack meter shown works on the vibrating-wire principle, but similar crack meters are available using LVDT transducers (Fig. 5-83).

Submersible Crack Meters. Submersible crack meters, shown in Fig. 5-84, are designed to monitor movement at submerged joints and cracks in concrete dams, tunnels, and tanks. Measurements are made by vibrating-wire sensors or potentiometer-based sensors. Uniaxial, biaxial, and triaxial

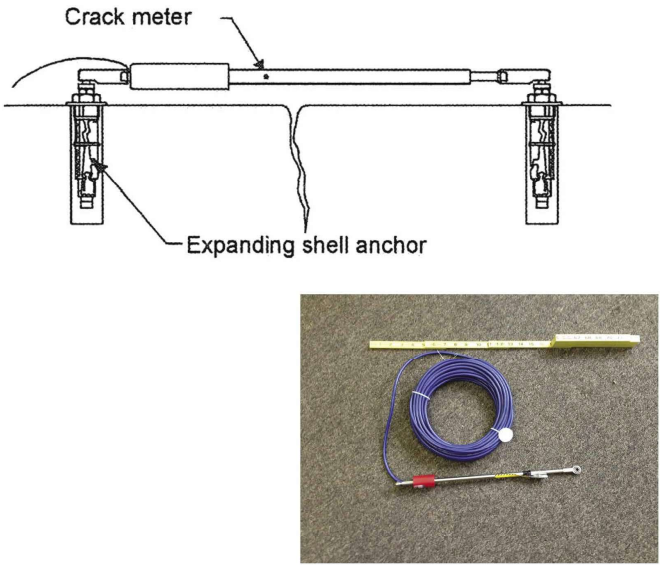

Fig. 5-82. Electronic crack meter with vibrating-wire transducer

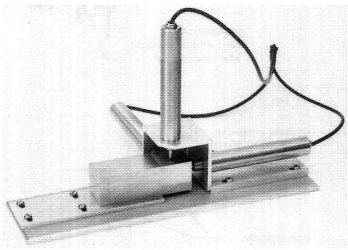

Fig. 5-83. 3D electronic crack meter with linear potentiometer transducers
Source: ASCE Task Committee on Instrumentation and Monitoring Dam Performance (2000).

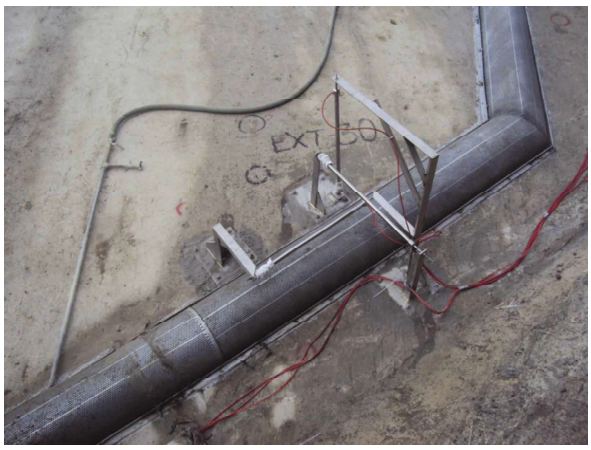

Fig. 5-84. 3D vibrating-wire submersible crack meter
Source: RST Instruments, reproduced with permission.

versions are available. The instruments are rated for use in up to 820 ft (250 m) of hydrostatic water pressure. Readings may be made manually or automatically. Data loggers capable of providing output for an array of crack meters are available.

Applications particular to submersible crack meters may include measuring crack progression in submerged concrete or rock, such as on the face of a dam, at dam abutments, or at the dam/abutment interface.

Embedment Joint Meters. Contraction joints are created between adjacent monoliths of concrete dams. Joints are also formed at each concrete lift. To monitor the opening and closing of these joints at points within the dam, an embedment-type joint meter may be used. Joint meters most commonly use vibrating-wire transducers, but Carlson transducers, based on the electrical resistance principle, also are used. The method of installation is in Figs. 5-85 and 5-86.

5.3.8 Seismic Response (Movement, Pressure, and Load)

Ground-motion measurements are not used as a predictive monitoring tool because they record earthquakes, without providing any warning prior to the event. There are a variety of devices that measure ground motion and can also record acceleration, velocity, and/or displacement over time. Records from these devices may trigger the need for other surveillance or measurements at the site to evaluate responses to ground shaking. Data from ground-shaking measurements at or near a site are used to analyze how the dam performed during an earthquake compared to its predicted

Downloaded from ascelibrary.org by Mining World SA on 06/14/19. Copyright ASCE. For personal use only; all rights reserved.

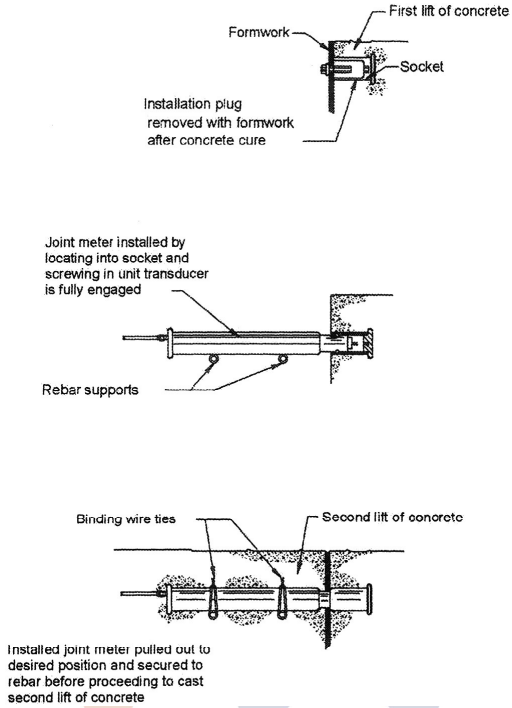

Fig. 5-85. Embedment joint meter
Source: ASCE Task Committee on Instrumentation and Monitoring Dam Performance (2000).

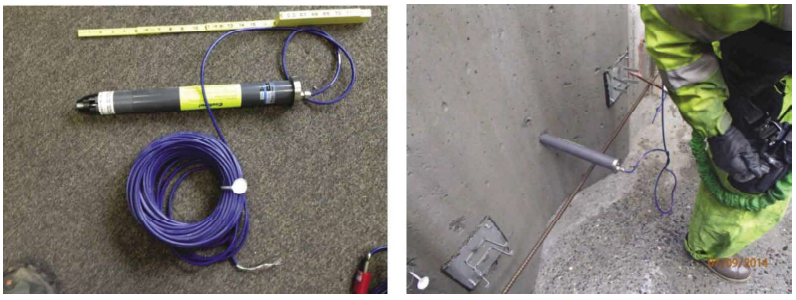

Fig. 5-86. Joint meter prior to and after installation

Downloaded from ascelibrary.org by Mining World SA on 06/14/19. Copyright ASCE. For personal use only; all rights reserved.

performance. Seismic response measurements described in this section are limited to strong-motion accelerographs. Mechanical seismic recorders are not discussed.

A strong-motion accelerograph combines one or more accelerometers and data-recording capabilities. It is used to measure and record dynamic ground accelerations produced by large earthquakes. The data are used to evaluate the response of an existing dam and to provide time histories to aid in the design of future dams (USCOLD 1989).

Ideally, seismic instruments would be placed in the free field (a location not influenced by the dam or other large structures), as well as on the dam crest or other pertinent structures. The response of the free-field instrument is representative of the baseline earthquake motion, and the crest instrument shows how the dam responds to the shaking.

An accelerograph, shown in Fig. 5-87, continually monitors accelerometer data until a user-set threshold is reached or exceeded. When this threshold is exceeded, the data is stored in 2–3-min data record increments, including the 30 s prior to the event. Standard accelerographs record data at 200 samples/s or more. It is standard practice to attach a GPS receiver to the accelerograph to obtain an accurate and reliable time stamp. One seismogeodetic system available is now adding GNSS (Global Navigation Satellite System) position recordings to significantly enhance the information recorded from the accelerograph. This generates more accurate histories of velocity and position data than is possible by integrating the acceleration data alone.

SOLUTIONS 4.0

Strong-motion accelerographs typically come equipped with at least three channels and include an internal triaxial force balance accelerometer (two orthogonal horizontal accelerometers plus one vertical accelerometer). Instruments can be stand-alone, and recorded events can either be downloaded automatically by modem or manually retrieved by a laptop computer or by collecting the removable memory card. Alternatively, instruments can be connected in a network, typically fiber optic, and interfaced to an external LAN. Most instruments are supplied with software for making time history plots and generating ASCII file formats for data analysis. Instruments usually have a relay output to trigger actions when a user-set threshold is reached. One seismogeodetic system combines an accelerograph with a geodetic positioning GNSS receiver, as illustrated in Fig. 5-88, and relay data using the same GNSS network.

Seismic measurements require high rates of data sampling and recording to accurately capture ground shaking. Because most general-purpose data-acquisition systems do not support the required high data rates and high resolution, accelerographs are typically self-contained units with their own data-recording capabilities. For accurate recording of earthquake events, accelerographs must be securely anchored (1) to rock to capture foundation base motion and (2) to a point(s) of interest on the dam—typically

Downloaded from ascelibrary.org by Mining World SA on 06/14/19. Copyright ASCE. For personal use only; all rights reserved.

Downloaded from ascelibrary.org by Mining World SA on 06/14/19. Copyright ASCE. For personal use only; all rights reserved.

Fig. 5-87. Digital accelerographs

the crest. Installation is accomplished by attaching the accelerograph to a concrete floor or prepared rock surface using anchor bolts.

Temporary seismographs may be installed during construction to monitor vibrations induced by blasting, dynamic compaction, or other activities that induce large vibrations. Seismographs measure pressure-wave velocities, and the velocities are evaluated to assess the potential for damaging structures or initiating a dam construction failure sequence.

Fig. 5-88. Real-time fully digital accelerometer, which can relay data via GNSS
Source: Courtesy of Trimble, reproduced with permission.

There are two basic categories of strong-motion accelerographs widely used: analog and digital accelerographs. These are described in the next section (Shakal and Huang 1996).

5.3.8.1 Analog Accelerographs. These pioneering devices, developed in the 1930s, are triggered by earthquakes and record the time versus acceleration on film. These devices were not always reliable, and it proved difficult to interpret results due to inconsistency in the x, y, and z components. An analog record may also need to be digitized, which is expensive and time-consuming. The instrument's current applicability is in regions of low likelihood of activity, where few records are expected over the lifetime of the instrument.

Rapid use of the data is not possible because of the need to develop the film and then digitize it. Analog accelerometers are legacy devices and are not in general use today.

5.3.8.2 Early Digital Accelerographs. First introduced in the 1970s, these accelerographs digitally record earthquakes on magnetic tape. Early digital accelerographs required significant maintenance to keep them functioning, and the magnetic tape was difficult to utilize with developing computer interfaces. These instruments are being replaced by improved accelerographs.

5.3.8.3 Intermediate Digital Accelerographs. These instruments were introduced in the 1980s and are much more reliable and easier to use than the early digital accelerographs. The drawback is that electrical demands

Downloaded from ascelibrary.org by Mining World SA on 06/14/19. Copyright ASCE. For personal use only; all rights reserved.

Downloaded from ascelibrary.org by Mining World SA on 06/14/19. Copyright ASCE. For personal use only; all rights reserved.

preclude the use of batteries, and so these devices are only operable at dams where power is available. Electrical service is often interrupted during earthquakes, and standby generators require a few seconds to transfer power. The consequence is that there may be gaps in the data when power is lost. Intermediate digital accelerographs have a greater dynamic range than the early film recorders because they record in a 12-bit format.

5.3.8.4 Modern High-Resolution Digital Accelerographs. The newest accelerographs record in a 24-bit format, and they have a much higher resolution than the intermediate digital accelerographs. Power consumption is still a problem for remote operation. For a comparison of instruments, see Table 5-3 at the end of this chapter.

5.3.9 Weather (Rainfall and Wind)

Total amounts of precipitation and precipitation intensity (i.e., hourly rate of precipitation) are important hydrological parameters to consider during the planning, design, and operational phases of a dam, its spillway, and its outlet works. Rainfall measurements can be useful in understanding the regional hydrologic factors that help to determine the appropriate design flood loading that could be expected at the dam. Rainfall measurements are also useful when evaluating instrumentation data from piezometers and weirs, reservoir-level data, etc., as rainfall affects spikes and trends. Wind speed and direction monitoring can be important to understand wave run-up affecting dams. These parameters may also be important in the evaluation of slope stability or avalanche risk on the reservoir side slopes.

AS SOLUTIONS 40 - 49

5.3.9.1 Design Considerations. Not every dam requires a weather station. Often, meteorological data can be obtained from nearby sources. If a weather station is required, then the following considerations are applicable.

Placement of a weather station is important to get a representative sampling of measurements. The National Oceanic and Atmospheric Administration (NOAA) and weather station manufacturers provide guidelines and specifications for locating weather monitoring instruments; however, variations from that guidance may be justified to meet the objectives of the user, cable length limits, radio transmission distance limits, or other factors. Wind causes errors in precipitation measurements, and the errors become more significant for snow and frozen precipitation. Trees, buildings, or other tall objects located close to gauges may deflect precipitation because of wind turbulence. To avoid wind and the resulting turbulence problems, rain gauges should be located in wide open spaces or on elevated sites, such as the tops of buildings. The best site for a gauge is one where it is

protected in all directions, such as in an opening in a grove of trees. The height of the protection should not exceed twice its distance from the gauge. Research to optimize manufactured windscreens for snow is ongoing, but accepted designs such as the Alter windscreen and others have existed for many years.

Helpful advice is available from NOAA's guidance for its Cooperative Observer Program: http://www.nws.noaa.gov/om/coop/standard.htm.

Snow depth and water content may be helpful to estimate seasonal runoff to inform flood management. Snow surveys can provide these data.

Anemometers for wind magnitude and direction are best mounted on a rooftop or on a high pole. The anemometer should be mounted at least 6 ft above a roof line for best results. For ground installations, the anemometer should be placed on a pole in an open area, unobstructed to the wind, and at least 5 ft above the ground.

The distance between a measurement and a readout point may have important implications when deciding whether to use a precipitation gauge compatible with an ADAS.

Access also may be an issue for service and maintenance.

Manual gauges require no power. However, gauges need power if they use ADAS, motorized equipment, or require heating. If power is impractical to provide at a gauge location, electric heat and motorized equipment are not possible. However, the low power required to energize a gauge's transducer can still be provided through signal cables, from batteries, or from solar cells at the gauge location.

SOLUTIONS 4.0

5.3.9.2 Rain Gauges. Although precipitation gauge manufacturing dates back over a century in the United States, important design improvements were made in the 1980s in the sensing and data-collection functions of precipitation gauges.

Mechanically, the two principal types of precipitation gauges are pan-type gauges and bucket gauges. Pan-type gauges are usually placed in an array or grid with a large surface area and are used principally for calibration and research; therefore, such gauges are not further discussed in this chapter. Bucket gauges are further subdivided into three classes: weighing gauges, tipping gauges, and manual gauges. Typical bucket capacities are 12 in. (300 mm), 24 in. (600 mm), and 30 in. (750 mm) of precipitation. The buckets have a cylindrical chimney or stack. The orifice of the stack is normally a specified height above the ground, for example, 60 in. (1.5 m), to minimize ground effects. Orifice diameters range from 6 to 12 in. (150 to 300 mm).

If snow is collected, the outside surface of the stack may be painted dark to absorb the maximum heat and aid in melting. To minimize the tendency for snow to adhere to the inside of the stack, nonstick coatings may be applied. Buckets are made of a material that tolerates cold weather

Downloaded from ascelibrary.org by Mining World SA on 06/14/19. Copyright ASCE. For personal use only; all rights reserved.

without cracking and has low friction to avoid snow sticking. Certain types of plastics meet this criterion and are inexpensive. When temperatures are below freezing, adding antifreeze to the bucket melts the snow that collects.

Measurement units in the United States are inches (in.), with a customary resolution of ±0.01 in. Outside the United States, the SI system of measurement prevails and precipitation is measured in millimeters (mm), with a typical resolution of ±0.1 mm.

Weighing Bucket Gauges. Weighing bucket gauges measure, as their name implies, by weighing the precipitation in a collection bucket. Resolution is better than 0.004 in. (0.1 mm) versus a tipping bucket gauge resolution of 0.01 in. (0.25 mm). Better resolution improves intensity measurements. Because they can operate without heating, weighing bucket gauges are the most practical type for measuring snowfall. The weighing sensor may be a load cell on one of the chains that supports a platform in which the bucket rests. Other methods of weighing include weighing the support platform of the bucket and measuring the pressure of the liquid precipitation with a pressure transducer at the bottom of the bucket. The weighing mechanism is typically a vibrating-wire or resistance strain gauge load cell. In the gauge shown in Fig. 5-89, a vibrating-wire load cell is filled on one of three internal chains supporting the bucket platform. Accurate measurements require the bucket to be level. Vibrating-wire load cells used in weighing buckets have the same advantages as other types of vibrating-wire instruments. These include simple design, minimal long-term error due to drift, minimal temperature effects, and error-free transmission over long signal cables (one mile or more).

ICE SOLUTIONS 40 – 50

Weighing bucket gauges use antifreeze (ethylene glycol) to melt frozen precipitation. A drawback is that this reduces capacity and requires more frequent maintenance to empty the bucket. Typically, the capacity of a 24-in. (600-mm) bucket would be reduced to about 60% capacity when enough antifreeze is used to protect down to –13°F (–25°C). With the use of antifreeze comes the need for environmentally proper disposal of the collected precipitation/antifreeze mix in waste containers. To minimize evaporation, a thin layer of aircraft hydraulic oil can be added to the bucket. The precipitation drops through the oil without emulsifying when oil of the correct viscosity is used.

For precipitation measurements at dams and reservoirs where automated data acquisition is used, weighing bucket gauges may be superior to pan or tipping-type gauges.

Tipping Bucket Gauges. Tipping bucket gauges are designed to tip upon collection of a fixed amount of precipitation, typically 0.01 in. (.25 mm) of water. The collected water is then discharged to the ground or a collection

Downloaded from ascelibrary.org by Mining World SA on 06/14/19. Copyright ASCE. For personal use only; all rights reserved.

Fig. 5-89. Weighing bucket precipitation gauge with double-alter shield
Source: Geonor, reproduced with permission.

bucket. Hence, they have unlimited capacities if the precipitation is discharged to the ground. The tipping action causes a reed switch or a mercury switch to trigger a pulse counter. Pulses may be easily interfaced to an ADAS. A disadvantage for remote operation in freezing temperatures is the need for heating, usually from an AC power source. A disadvantage of using electrical heating is the need for temperature controls; in other words, if the heater is continuously powered, melted precipitation may evaporate. Another disadvantage is that debris can foul a tipping bucket. For these reasons, tipping buckets are generally not suitable for measurement of snowfall or for use in remote locations. The presence of moving parts also creates a need for maintenance and cleaning.

Manual Precipitation Gauges. Manually read gauges are low in initial cost, but they are labor intensive. They are not suitable for remote, hard-to-access locations, or where intensity measurements are needed.

5.4 FACTORS AFFECTING INSTRUMENT PERFORMANCE

Long-term performance of dam-monitoring instrumentation is sensitive to the maintenance of devices, connections, and cabling. Exposed cabling is susceptible to damage. Connections are susceptible to damage if cables can be easily pulled or snagged. Moisture entering connections

Downloaded from ascelibrary.org by Mining World SA on 06/14/19. Copyright ASCE. For personal use only; all rights reserved.

and causing corrosion is a common maintenance problem. Dry connections allow the instrumentation system to work properly.

5.4.1 Cabling, Tubing, Junction Boxes, Terminal Boxes

Because they are easily damaged during handling and installation, cables and tubing are often the weak link in instrument installations. Cables need to be sufficiently robust to survive handling during installation and the long-term effects of water and chemicals in the ground. As discussed in this section, lightning protection is also essential to monitoring systems with potential lightning exposure.

A cable, shown schematically in Fig. 5-90, consists of insulated conductors, a shield, a drain wire, and an outer jacket. The conductors are usually stranded copper (AWG 20–24) with polypropylene insulation. Stranded conductors are preferred because they are less likely to fatigue as the cable is bent. For sensor signals that can be affected by noise, cables with twisted-pair construction are used. An overall shield and drain wire also help prevent interference from electrical noise. The shield is terminated at the sensor without being connected to the sensor. At the surface, the shield is connected to ground.

The cable jacket is usually polyvinyl chloride (PVC), polyurethane, or polyethylene. The jacket provides overall protection to the components of the cable and electrical insulation from transient ground currents. The jacket is required to provide a minimum insulation of 300 V. PVC is the most commonly used jacket material as it can be sealed in the sensor with potting.

Polyurethane is more expensive than PVC, but it provides better long-term waterproofing and better resistance to abrasion. Polyethylene has an even better resistance to water absorption, but it requires an expensive mechanical seal because potting will not adhere to it. The most common jacket is black, which contains ultraviolet (UV) inhibitors to protect the jacket from UV light. Black is used if the cable is to be exposed for any length of

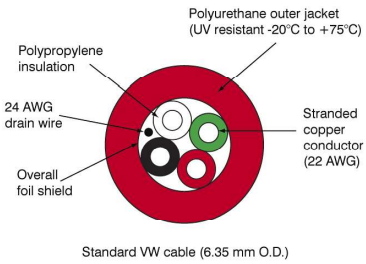

Fig. 5-90. Typical construction of 4-conductor cable for vibrating-wire instruments Source: RST Instruments, reproduced with permission.

Downloaded from ascelibrary.org by Mining World SA on 06/14/19. Copyright ASCE. For personal use only; all rights reserved.

time. Water-blocked cable may be specified where tearing of the cable jacket is a possibility: armored and reinforced cable is also available.

For individual sensor installations in boreholes, cables are usually terminated at the top of the borehole in a waterproof enclosure. Large installations usually require a central readout point with cables routed from the borehole to the readout point in trenches. Whenever cable is exposed aboveground, it must be enclosed in conduit to protect it from UV light, physical damage, and animals (rodents like to take bites out of it).

Cables routed through earth embankments must be flexible enough (stretch) to accommodate settlement that may occur. Cables are typically laid in a trench, backfilled with 6 in. to 1 ft (150–300 mm) of granular fill above and below the cable, the fill having been passed through a #40 sieve. The fill in the trench is compacted to the same relative compaction as the embankment using hand-operated equipment. Trenches do not pass through the impermeable zone of a dam because they form a potential leakage path. Bentonite seals are often placed at regular intervals in trenches to serve as waterstops.

Cables passing from one zone of the dam to another or passing through coarse fill are protected in grease-filled conduits. Burying cable splices below ground level is not advised for long-term projects. If buried, splices are required, and splices need to be strong enough to withstand burial and maintain a waterproof connection.

Junction boxes and terminal boxes are commonly metal or fiberglass. If they are sealed, they contain a silica-gel desiccant to prevent condensation. The desiccant must be changed on a regular basis. The cable entry point can be sealed with grommets or putty.

ICE Solutions 40 – 32

5.4.2 Lightning and Transient Protection

As mentioned previously, instruments with electronic or electrical components are highly susceptible to damage from electrical transients caused by lightning discharges. The degree of susceptibility depends on the type of components employed in the instrument, the instrument location, and the manner in which signal cables are connected to and extended from the instrument. Instruments that are installed outdoors on embankment dams are especially vulnerable to lightning-induced transients because this environment lacks the usual first line of defense against lightning effects, a grounded building or structure. Destructive surges can also be caused by other mechanisms such as electrostatic discharge (ESD), which is typically a handling issue, and ground potential surges, which can be violent and frequent in the vicinity of switchyards. In the case of permanent installations, the protection strategies are essentially the same for all types of surges. Several extensive monitoring arrays have been destroyed by lightning. Instrument manufacturers and suppliers are the best source

Downloaded from ascelibrary.org by Mining World SA on 06/14/19. Copyright ASCE. For personal use only; all rights reserved.

of site- and instrument-specific advice regarding lightning and transient protection.

5.4.3 Calibration and Maintenance

Instrument maintenance requires accessibility. Buried instruments are normally not recoverable and should be selected with high long-term, low-maintenance reliability in mind. Buried instruments intended to last the design life of the dam require careful research before selection. Existing instrument performance data over periods of several decades may not be available to aid in instrument selection. Judgment must be exercised to select an appropriate instrument with a view to maximizing needed data, maintenance requirements, and cost. It may be advisable to locate as many instruments as possible in recoverable installations so that they can be replaced if necessary.

Instruments should be calibrated at the factory prior to shipment, and calibration data must be furnished with each instrument. Whenever possible, the calibration should be checked again after it is received to make sure the instrument was not damaged in shipment. Items such as pressure gauges used to measure uplift and weirs used to monitor seepage should be calibrated regularly. Calibration of the readout devices is also very important and should be done on a scheduled basis, at least annually.

Maintenance is generally the responsibility of the technicians charged with taking the instrument readings. It is important that an engineer or representative responsible for dam safety periodically inspect the condition of the instrumentation to ensure that it is being properly maintained. Readout boxes and terminals are often subject to wet or damp conditions. Keeping them as dry as possible will help prevent corrosion to the terminals. A record of each instrument on a dam including its location, the date of its last inspection, its condition, and a photograph of the instrument, if possible, add value to a performance-monitoring plan.

Maintenance of an instrument should also be a key consideration when selecting the proper instrument. An example of the importance of this can be seen in the manifolds where piezometer tubes at a dam are encrusted with calcium deposits. The very-small-diameter plastic tubes are brittle and cannot be cleaned out, nor can the calcium buildup be removed because more damage to the tubes would occur. This has led to the concern that as the bundles of tubes pass through the core of the dam, piping of core material could occur.

Downloaded from ascelibrary.org by Mining World SA on 06/14/19. Copyright ASCE. For personal use only; all rights reserved.

Downloaded from ascelibrary.org by Mining World SA on 06/14/19. Copyright ASCE. For personal use only; all rights reserved.

Table 5-3. Instrument Comparison.

	Instrument Name					
		In-place inclinometers (MEM Sensors)				
	Manual inclinometers	Multiple-interval	Multiple-point	Inclinometer casing	Shape accelerometer arrays (SAA)	Time-domain reflectometry (TDR), Section 5.3.7.3
DEFORMATION AND MOVEMENT						
Inclinometers, Section 5.3.7.1						
Parameter measured	Lateral deflections of inclinometer casing in a borehole.	Lateral deflections of inclinometer casing in a borehole.	Lateral deflections of inclinometer casing in a borehole.	Required for manual inclinometer and in-place inclinometers.	Lateral deflections of inclinometer casing or PVC access pipe in a borehole.	Determine locations of active shear plane in a borehole.
Common applications	Slope stability in dam embankment and abutments, reservoir slopes.	Slope stability in dam embankment and abutments, reservoir slopes.	Slope stability in dam embankment and abutments, reservoir slopes.	Access casing for inclinometer surveys.	Slope stability in dam embankment and abutments, reservoir slopes.	Slope stability in dam abutments and reservoir slopes.
Current practice or legacy instrument?[a]	Current	Current	Legacy/current	Current	Current	Current
Installation specifics/ease of installation	Requires inclinometer casing. Inclinometer probe, 2 ft long, lowered in casing using marked signal cable and raised to take readings at fixed intervals (typically every 2 ft).	Requires inclinometer casing. String of sensors with rigid 2 to 10 ft extension rods between wheels.	Requires inclinometer casing. String of point sensors separated by flexible spacer rods, 2 to 10 ft long.	Casing lowered and grouted in borehole. Buoyancy must be controlled in holes with high water table, or casing raised in embankment during construction of new dam. May break at slide plan.	Preassembled tubular string of 1.6 ft long sensors ready for insertion in casing or access pipe.	Coaxial cable grouted in borehole or inclinometer casing or access pipe.

Downloaded from ascelibrary.org by Mining World SA on 06/14/19. Copyright ASCE. For personal use only; all rights reserved.

General considerations	Requires operator dexterity for repeatable readings.	Sensor string can be lowered to depth of anticipated movement. Can be removed and reused in another borehole.	Sensor string can be lowered to depth of anticipated movement. Can be removed and reused in another borehole.	ABS casing, 2.75 or 3.34 in. diameter. Groove spiral must be minimal. Maximum settlement accommodated without telescopic sections is 1%.	Sensor string can be lowered to depth of anticipated movement. Can be removed and reused in another borehole.	Coaxial cable, 12.7 mm (0.5 in.) diameter preferred for stronger signal.
General methods of reading output[b]	Portable data logging readout to collect readings as probe is raised manually in the casing.	Portable readout, ADAS.	Portable readout, ADAS.	N/A	Portable readout, ADAS with dedicated conditioning interface.	Portable TDR readout unit or ADAS with dedicated TDR conditioning interface given.
Sensor options	MEMS accelerometer, servo-accelerometer.	MEMS accelerometer, electrolytic tilt sensors.	MEMS accelerometer, electrolytic tilt sensors.	N/A	MEMS accelerometer.	Time-domain reflectometry.
Sensitivity	0.0006 deg. (MEMS digital) typical.	0.0006 deg. (MEMS digital) typical.	0.0006 deg. (MEMS digital) typical.	N/A	N/A	Provides only location of shear movement, not magnitude.
Accuracy	±0.002 deg. (MEMS digital) typical.	±0.002 deg. (MEMS digital) typical.	±0.002 deg. (MEMS digital) typical.	N/A	±0.029 deg.	Shear location along cable within 2 to 5 ft depending on cable length.
Repeatability	±1 to 3 mm per 30 m of profile (system accuracy for MEMS digital).	±0.002 deg. (MEMS digital) typical.	±0.002 deg. (MEMS digital) typical.	N/A	±1.5 mm per 32 m of profile.	2 to 5 ft.

Downloaded from ascelibrary.org by Mining World SA on 06/14/19. Copyright ASCE. For personal use only; all rights reserved.

Table 5-3. (*Continued*) Instrument Comparison.

	Instrument Name					
		In-place inclinometers (MEM Sensors)				
	Manual inclinometers	Multiple-interval	Multiple-point	Inclinometer casing	Shape accelerometer arrays (SAA)	Time-domain reflectometry (TDR), Section 5.3.7.3
Accuracy/ Repeatability[c]	Probe requires calibration annually, or when checksums become too high.	Ensure stable positioning of the string in the casing. Connectors between sensors must be waterproof.	Ensure stable positioning of the string in the casing. Connectors between sensors must be waterproof.	Protect collar end of casing from damage.	Ensure stable positioning of the string in the access pipe.	If coaxial cable jacket gets damaged, water ingress will corrupt the TDR signal.
Longevity[d]	Probe: YYYY Cable: YYY	YYYY	YYYY	YYYYY	YYYY	YYYY
Maintenance requirements	Periodic probe calibration. Periodic cable inspection.	Verify surface cable integrity Removing or lifting string can be considered.	Verify surface cable integrity Removing or lifting string can be considered.	Verify casing integrity. Silt and dirt can accumulate in casing grooves.	Verify surface cable integrity Removing or lifting string can be considered.	Verify surface cable integrity.
Relative expense[e]	Instrument: $$$$ Readout: $$$ ADAS: N/A	Instrument: $$ Readout: $$$ ADAS: $$$ to $$$$	Instrument: $$ Readout: $$$ ADAS: $$$ to $$$$	Instrument: $ Readout: N/A ADAS: N/A	Instrument: $$$$ Readout: N/A ADAS: $$$$	Instrument: $ Readout: $$$ ADAS: $$$$

[a]"Current practice or legacy" refers to common practice in current U.S. applications. However, legacy instruments may still be in use and available and may have some advantages in particular applications.
[b]General methods of reading output: can include manual, on-demand, and output that can accommodate ADAS (Automated Data Acquisition Systems).
[c]Accuracy/repeatability considerations: include thermal exposure and long-term stability.
[d]Longevity: Y, 1 year or less; YY, 1–5 years; YYY, 5–10 years; YYYY, 10–15 years; and YYYYY, more than 15 years.
[e]Relative expense: $, $1–$199; $$, $200–$999; $$$, $1,000–$2,999; $$$$, $3,000–$9,999; and $$$$$, more than $10,000.

Downloaded from ascelibrary.org by Mining World SA on 06/14/19. Copyright ASCE. For personal use only; all rights reserved.

	Instrument Name				
	Surface-mount tiltmeters	Submersible tiltmeters	Borehole tiltmeters	Portable tiltmeters	Beam sensors
Tiltmeters and Beam Sensors, Section 5.3.7.4					
Parameter measured	Rotational movement using gravity as the reference datum.	Rotational movement using gravity as the reference datum.	Rotational movement using gravity as the reference datum.	Rotational movement using gravity as the reference datum.	Rotational movement using gravity as the reference datum.
Common applications	Tilt in gravity dams, appurtenant concrete structures.	Settlement-induced tilt of inclined concrete face in CFRD dams, other submerged applications (typically up to 700 ft depth).	Localized tilt in dam embankments, superficial overburden layers.	Tilt in gravity dams.	Horizontal settlement profile in inspection gallery, dam crest.
Current practice or legacy instrument?[a]	Current	Current	Current	Current	Current
Installation specifics/ease of installation	Vertical or horizontal mounting bracket.	Vertical or horizontal mounting bracket, protective cover recommended.	Grouted in borehole.	Fixed horizontal or vertical reference tilt plates read with a portable tiltmeter.	Series of beams attached end to end.
General considerations	Concrete or steel structure on which tiltmeter is mounted can also display temperature-dependent tilt movements. Temperature measurement to tilt can assist in assessing temperature effects.	Concrete or steel structure on which tiltmeter is mounted can also display temperature-dependent tilt movements. Temperature measurement to tilt can assist in assessing temperature effects.	Concrete or steel structure on which tiltmeter is mounted can also display temperature-dependent tilt movements. Temperature measurement to tilt can assist in assessing temperature effects.	Concrete or steel structure on which tiltmeter is mounted can also display temperature-dependent tilt movements. Temperature measurement to tilt can assist in assessing temperature effects.	Concrete or steel structure on which tiltmeter is mounted can also display temperature-dependent tilt movements. Temperature measurement to tilt can assist in assessing temperature effects.
General methods of reading output[b]	Portable readout, ADAS.	Portable readout, ADAS.	Portable readout, ADAS.	Portable readout.	Portable readout, ADAS.

Downloaded from ascelibrary.org by Mining World SA on 06/14/19. Copyright ASCE. For personal use only; all rights reserved.

Table 5-3. (*Continued*) Instrument Comparison.

	Instrument Name				
	Surface-mount tiltmeters	Submersible tiltmeters	Borehole tiltmeters	Portable tiltmeters	Beam sensors
Sensor options	MEMS accelerometer, electrolytic tilt sensors.	MEMS accelerometer, electrolytic tilt sensors.	MEMS accelerometer, electrolytic tilt sensors.	MEMS accelerometer, electrolytic tilt sensors.	MEMS accelerometer, electrolytic tilt sensors.
Sensitivity	0.0006 deg. (MEMS digital) typical.	0.0006 deg. (MEMS digital) typical.	0.0006 deg. (MEMS digital) typical.	0.0006 deg. (MEMS digital) typical.	0.0006 deg. (MEMS digital) typical.
Accuracy	±0.002 deg. (MEMS digital) typical.	±0.002 deg. (MEMS digital) typical.	±0.002 deg. (MEMS digital) typical.	±0.002 deg. (MEMS digital) typical.	±0.002 deg. (MEMS digital) typical.
Repeatability	±0.002 deg. (MEMS digital) typical.	±0.002 deg. (MEMS digital) typical.	±0.002 deg. (MEMS digital) typical.	±0.01 deg. (system accuracy for MEMS digital).	±0.01 deg. (system accuracy for MEMS digital).
Accuracy/ Repeatability[c]	Must be protected from direct sun exposure.	Protect from vibrations and external shocks.	Protect from vibrations and external shocks.	Requires operator proficiency for repeatable readings.	Protect from vibrations and external shocks.
Longevity[d]	YYYY	YYYYY	YYYYY	YYY	YYY
Maintenance requirements	Protect from any contact or shock. Consider secondary enclosure.	Protect from any contact or shock. Consider secondary enclosure.	Verify surface cable integrity.	Periodic tiltmeter calibration.	Protect from any contact or shock. Periodic inspection.
Relative expense[e]	Instrument: $$ Readout: $$ ADAS: $$$ to $$$$	Instrument: $$$ Readout: $$ ADAS: $$$ to $$$$	Instrument: $$$ Readout: $$ ADAS: $$$ to $$$$	Instrument: $$$ Readout: $$ to $$$ ADAS: N/A	Instrument: $$$ Readout: $$ ADAS: $$$ to $$$$

[a]"Current practice or legacy" refers to common practice in current U.S. applications. However, legacy instruments may still be in use and available and may have some advantages in particular applications.
[b]General methods of reading output: can include manual, on-demand, and output that can accommodate ADAS (Automated Data Acquisition Systems).
[c]Accuracy/Repeatability considerations: include thermal exposure and long-term stability.
[d]Longevity: Y, 1 year or less; YY, 1–5 years; YYY, 5–10 years; YYYY, 10–15 years; and YYYYY, more than 15 years.
[e]Relative expense: $, $1–$199; $$, $200–$999; $$$, $1,000–$2,999; $$$$, $3,000–$9,999; and $$$$$, more than $10,000.

Downloaded from ascelibrary.org by Mining World SA on 06/14/19. Copyright ASCE. For personal use only; all rights reserved.

	Instrument Name	
	Plumblines	Inverted pendulums
Plumblines and Inverted Pendulums, under Section 5.3.7.4 (Tiltmeters and Beam Sensors)		
Parameter measured	Rotational movement using gravity as the reference datum.	Rotational movement using gravity as the reference datum.
Common applications	Overall inclination in concrete gravity and arch dams.	Overall inclination in concrete gravity and arch dams relative to foundation. Used when access to bottom of well will be inconvenient after installed.
Current practice or legacy instrument?[a]	Current	Current
Installation specifics/ease of installation	Requires vertical shaft, typically 8–12 in. diameter extending from dam crest to foundation.	Requires vertical 8–12 in. diameter borehole in foundation.
General considerations	Suspension cable should not exceed 200 ft in length. Protection against water dripping in shaft is required. Simpler than inverted pendulum.	Suspension cable should not exceed 200 ft in length. Protection against water dripping in shaft is required. Simpler than inverted pendulum.
General methods of reading output[b]	Mechanical reading table, or electromechanical or optical automatic readout interfaced to ADAS.	Mechanical reading table, or electromechanical or optical automatic readout interfaced to ADAS.
Sensor options	Mechanical, electromechanical, or optical.	Mechanical, electromechanical, or optical.
Sensitivity	0.01 mm (0.0004 in.) typical with optical readout.	0.01 mm (0.0004 in.) typical with optical readout.

Downloaded from ascelibrary.org by Mining World SA on 06/14/19. Copyright ASCE. For personal use only; all rights reserved.

Table 5-3. (*Continued*) Instrument Comparison.

	Instrument Name	
	Plumblines	Inverted pendulums
Accuracy	0.05 mm (0.002 in.) typical with optical readout.	0.05 mm (0.002 in.) typical with optical readout.
Repeatability	0.05 mm (0.002 in.) typical with optical readout.	0.05 mm (0.002 in.) typical with optical readout.
Accuracy/ Repeatability[c]	Damping fluid must be checked periodically. No friction in tank and in shaft. No air draft in shaft.	Damping fluid must be checked periodically. No friction in tank and in shaft. No air draft in shaft.
Longevity[d]	YYYY	YYYY
Maintenance requirements	Change damping fluid and clean all components periodically. Verify obstructions.	Change damping fluid and clean all components periodically. Verify obstructions.
Relative expense[e]	Instrument: $$$ Readout: $$$$ ADAS: $$$$$	Instrument: $$$$ Readout: $$$$ ADAS: $$$$$

[a]"Current practice or legacy" refers to common practice in current U.S. applications. However, legacy instruments may still be in use and available and may have some advantages in particular applications.
[b]General methods of reading output: can include manual, on-demand, and output that can accommodate ADAS (Automated Data Acquisition Systems).
[c]Accuracy/Repeatability considerations: include thermal exposure and long-term stability.
[d]Longevity: Y, 1 year or less; YY, 1–5 years; YYY, 5–10 years; YYYY, 10–15 years; and YYYYY, more than 15 years.
[e]Relative expense: $, $1–$199; $$, $200–$999; $$$, $1,000–$2,999; $$$$, $3,000–$9,999; and $$$$$, more than $10,000.

Downloaded from ascelibrary.org by Mining World SA on 06/14/19. Copyright ASCE. For personal use only; all rights reserved.

	Instrument Name					
	Multirod MPBX	Single-rod (Incremental) MPBX	Probe extensometers	Borros heave/ settlement points (Geonor settlement probes)	Bureau of Reclamation Settlement System	Convergence meters, Section 5.3.7.6
Borehole Extensometers, under Section 5.3.7.5 (Settlement Gauges)						
Parameter measured	Compression and extension movements along axis of borehole.	Compression and extension movements along axis of borehole.	Compression and extension movements along axis of borehole.	Compression and extension movements along axis of borehole.	Compression and extension movements along axis of borehole.	Change of distance between two points located on the walls of underground openings.
Common applications	Compression in concrete dam foundations. Movements of geological features in dam abutments.	Compression in concrete dam foundations. Movements of geological features in dam abutments.	Settlement in earth dams.	Settlement in earth dams.	Settlement in earth dams.	Underground powerhouse, diversion tunnel.
Current practice or legacy instrument?[a]	Current	Current	Current	Current	Legacy	Current
Installation specifics/ease of installation	Requires 75–100 mm diameter borehole, grouted anchors or other types (hydraulic bladder . . .).	Requires 75–100 mm diameter borehole, grouted anchors or other types (hydraulic bladder . . .).	Requires vertical access pipe (25–35 mm diameter) or inclinometer casing, and magnetic settlement plates or targets along pipe.	Riser pipe and concentric inner rigid rod connected to bottom anchor.	Telescoping steel pipe sections with cross arms.	Measuring tape extended between reference anchors or laser measurement.

Downloaded from ascelibrary.org by Mining World SA on 06/14/19. Copyright ASCE. For personal use only; all rights reserved.

Table 5-3. (*Continued*) Instrument Comparison.

	Instrument Name					
	Multirod MPBX	Single-rod (Incremental) MPBX	Probe extensometers	Borros heave/settlement points (Geonor settlement probes)	Bureau of Reclamation Settlement System	Convergence meters, Section 5.3.7.6
General considerations	If compression is anticipated, rods must be rigid enough to not bend.	Electrical head is recessed in borehole.	Requires operator dexterity for repeatable readings. Survey from bottom to top of hole must be done in a similar way every time.	Requires operator dexterity for repeatable readings. Survey from bottom to top of hole must be done in a similar way every time.	Requires operator dexterity for repeatable readings. Survey from bottom to top of hole must be done in a similar way every time.	Requires operator dexterity for repeatable readings.
General methods of reading output[b]	Mechanical reading (depth gauge) or electrical (VW displacement transducers, potentiometers, CVDT).	Electrical (VW displacement transducers, potentiometers . . .).	Manual reading only: probe lowered in access pipe. Depth read on graduated electric tape.	Manual reading: inner rod displacement relative to riser pipe.	Manual reading only: probe lowered in pipe.	Dial gauge (mechanical or digital) or laser.
Sensor options	VW, potentiometer, or many other options.	VW or potentiometer.	Reed switch probe.	Manual reading scale. Can also be automated with electric displacement transducer.	Cannot be automated.	Laser distance sensor accuracy varies between 0.1 and 1 mm.
Sensitivity	0.001–0.05 mm (0.00004–0.002 in.) typical.	0.001–0.05 mm (0.00004–0.002 in.) typical.	0.1–0.5 mm (0.04–0.2 in.).	0.5 mm (0.02 in.) (for manual reading) typical.	0.5 mm (0.02 in.) typical.	0.01 mm (0.0004 in.) for dial gauge.
Accuracy	0.01–0.05 mm (0.0004–0.002 in.) typical.	0.01–0.05 mm (0.0004–0.002 in.) typical.	0.1–0.5 mm (0.04–0.2 in.).	0.5 mm (0.02 in.) (for manual reading) typical.	0.5 mm (0.02 inch) typical.	0.01–0.05mm (0.0004–0.002 in.) for dial gauge.

Downloaded from ascelibrary.org by Mining World SA on 06/14/19. Copyright ASCE. For personal use only; all rights reserved.

Repeatability	0.01–0.05 mm (0.0004 to 0.002 in.) typical.	0.01–0.05 mm (0.0004–0.002 in.) typical.	0.1–0.5 mm (0.04–0.2 in.).	0.5 mm (0.02 in.) (for manual reading) typical.	0.5 mm (0.02 in.) typical.	0.1–0.3 mm (0.004–0.01 in.) for dial gauge, 0.1–1 mm for laser.
Accuracy/ Repeatability[c]	Rigid rods provide better reading accuracy and repeatability, especially when compression movements are anticipated.	Rigid rods provide better reading accuracy and repeatability, especially when compression movements are anticipated.		Friction or shear movements in borehole can affect readings.	Survey from bottom to top of hole must be done in a similar way every time.	Temperature dilation of measuring tape can be significant source of error.
Longevity[d]	YYYYY	YYYYY	YYYY	YYYY	YYYY	YYY
Maintenance requirements	Periodic check of electrical head. Verify surface cable integrity.	Verify surface cable integrity.	Periodic inspection of readout and graduated electric tape.	Periodic inspection.	Periodic instrument inspection.	Periodic instrument and anchor points inspection.
Relative expense[e]	Instrument: $$$ to $$$$ Readout: $$$ ADAS: $$$ to $$$$	Instrument: $$$ to $$$$ Readout: $$$ ADAS: $$$ to $$$$	Instrument: $$ Readout: $$ ADAS: N/A	Instrument: $$ to $$$ (if electric transducer) Readout: $$ ADAS: N/A or $$$ to $$$$ (if electric transducer)	Instrument: $$$ Readout: $ ADAS: N/A	Instrument: $ Readout: $$$$ ADAS: N/A

[a]"Current practice or legacy" refers to common practice in current U.S. applications. However, legacy instruments may still be in use and available and may have some advantages in particular applications.
[b]General methods of reading output: can include manual, on-demand, and output that can accommodate ADAS (Automated Data Acquisition Systems).
[c]Accuracy/Repeatability considerations: include thermal exposure and long-term stability.
[d]Longevity: Y, 1 year or less; YY, 1–5 years; YYY, 5–10 years; YYYY, 10–15 years; and YYYYY, more than 15 years.
[e]Relative expense: $, $1–$199; $$, $200–$999; $$$, $1,000–$2,999; $$$$, $3,000–$9,999; and $$$$$, more than $10,000.

Downloaded from ascelibrary.org by Mining World SA on 06/14/19. Copyright ASCE. For personal use only; all rights reserved.

Table 5-3. (*Continued*) Instrument Comparison.

	Instrument Name				
	Manual crack meters	Electric crack meters	Submersible crack meters	Embedment joint meters	Embedment soil strain meter or soil extensometer
Joint Meters and Crack Meters, Section 5.3.7.7					
Parameter measured	1D, 2D, and 3D movement of surface cracks or joints.	1D, 2D, and 3D movement of surface cracks or joints.	1D, 2D, and 3D movement of surface cracks or joints.	1D extension/ contraction of joints between concrete blocks.	1D horizontal extension/compression in earth embankments.
Common applications	Concrete surfaces, rock joints.	Concrete joints and cracks in dams, tension cracks in slopes.	Upstream face of concrete dams and appurtenant structures.	RCC dams, CFRD dams.	Extension/compression in earth core and shells of embankment dams, or rockfill of CFRD dams.
Current practice or legacy instrument?[a]	Current	Current	Current	Current	Current
Installation specifics/ease of installation	Surface mounting, generally with grouted or mechanical anchors.	Surface mounting, generally with grouted or surface anchors.	Surface mounting, generally with grouted anchors.	Embedded in concrete between joints during construction.	Extensometer with length of 2 to 10 ft embedded during embankment construction.

Downloaded from ascelibrary.org by Mining World SA on 06/14/19. Copyright ASCE. For personal use only; all rights reserved.

General considerations	Requires operator dexterity for repeatable readings.	Concrete or steel structure on which crack meter is mounted can also display temperature-dependent tilt movements.	Concrete or steel structure on which crack meter is mounted can also display temperature-dependent tilt movements.	Concrete or steel structure on which crack meter is mounted can also display temperature-dependent tilt movements.	String of multiple extensometers can be installed in series.
General methods of reading output[b]	Mechanical reading: micrometer or depth gauge.	Portable readout, ADAS.	Portable readout, ADAS.	Portable readout, ADAS.	Portable readout, ADAS.
Sensor options	Removable spring-loaded potentiometer or LVDT.	VW displacement transducers, potentiometers, LVDT.	VW displacement transducers, potentiometers, LVDT.	VW displacement transducers, potentiometers, LVDT.	VW displacement transducers, potentiometers, LVDT.
Sensitivity	0.01 mm (0.0004 in.) for dial gauge.	0.01–0.04 mm (0.0004–0.0016 in.) typical for VW, depending on measuring range.	0.01–0.04 mm (0.0004–0.0016 in.) typical for VW, depending on measuring range.	0.01–0.04 mm (0.0004–0.0016 in.) typical for VW, depending on measuring range.	0.01–0.04 mm (0.0004–0.0016 in.) typical for VW, depending on measuring range.
Accuracy	0.02–0.05 mm (0.0008–0.002 in.).	0.01–0.1 mm (0.0004–0.004 in.) (±0.2% F.S. for VW typical).	0.01–0.1 mm (0.0004–0.004 in.) (±0.2% F.S. for VW typical).	0.01–0.1 mm (0.0004–0.004 in.) (±0.2% F.S. for VW typical).	0.01–0.1 mm (0.0004–0.004 in.) (±0.2% F.S. for VW typical).
Repeatability	0.02–0.05 mm (0.001–0.002 in.).	0.01–0.1 mm (0.0004–0.004 in.) depending on transducer type and measuring range.	0.01–0.1 mm (0.0004–0.004 in.) depending on transducer type and measuring range.	0.01–0.1 mm (0.0004–0.004 in.) depending on transducer type and measuring range.	0.01–0.1 mm (0.0004–0.004 in.) depending on transducer type and measuring range.

Downloaded from ascelibrary.org by Mining World SA on 06/14/19. Copyright ASCE. For personal use only; all rights reserved.

Table 5-3. (*Continued*) Instrument Comparison.

	Instrument Name				
	Manual crack meters	Electric crack meters	Submersible crack meters	Embedment joint meters	Embedment soil strain meter or soil extensometer
Accuracy/ Repeatability[c]	Ensure repeatable positioning of micrometer. Use reference measuring bar.	VW displacement transducers have temperature correction factor.	VW displacement transducers have temperature correction factor.	VW displacement transducers have temperature correction factor.	VW displacement transducers have temperature correction factor.
Longevity[d]	YYY	YYYY	YYYYY	YYYY	YYYY
Maintenance requirements	Periodic instrument and anchor points inspection.	Protect from any contact or shock. Periodic inspection.	Protect from any contact or shock.	Verify surface cable integrity.	Verify surface cable integrity.
Relative expense[e]	Instrument: $ Readout: $$$ ADAS: N/A	Instrument: $$ Readout: $$$ ADAS: $$$ to $$$$	Instrument: $$ Readout: $$$ ADAS: $$$ to $$$$	Instrument: $$ Readout: $$$ ADAS: $$$ to $$$$	Instrument: $$ Readout: $$$ ADAS: $$$ to $$$$

[a]"Current practice or legacy" refers to common practice in current U.S. applications. However, legacy instruments may still be in use and available and may have some advantages in particular applications.
[b]General methods of reading output: can include manual, on-demand, and output that can accommodate ADAS (Automated Data Acquisition Systems).
[c]Accuracy/Repeatability considerations: include thermal exposure and long-term stability.
[d]Longevity: Y, 1 year or less; YY, 1–5 years; YYY, 5–10 years; YYYY, 10–15 years; and YYYYY, more than 15 years.
[e]Relative expense: $, $1–$199; $$, $200–$999; $$$, $1,000–$2,999; $$$$, $3,000–$9,999; and $$$$$, more than $10,000.

Downloaded from ascelibrary.org by Mining World SA on 06/14/19. Copyright ASCE. For personal use only; all rights reserved.

	Instrument Name					
	Overflow technique	Liquid pressure technique	Hydraulic settlement profilers - standard types	Hydraulic settlement profiler - double fluid type	Liquid-level settlement system	Precision settlement system - water-level type
Differential Settlement Gauges and Liquid-Level Gauges, under Section 5.3.7.5 (Settlement Gauges)						
Parameter measured	Settlement of earth core and shoulders, settlement of concrete face.	Settlement of earth core and shoulders, settlement of concrete face.	Continuous settlement profile.	Continuous settlement profile.	Precision settlement.	Precision settlement.
Common applications	Embankment dams, CFRD dams.	Embankment dams, CFRD dams.	Small embankments.	Embankment dams.	Tunnels, powerhouse.	Tunnels, powerhouse.
Current practice or legacy instrument?[a]	Current	Current	Current	Legacy	Current	Current
Installation specifics/ease of installation	Overflow cells embedded during construction, connected by hydraulic tubing to a graduated vertical-level indicator glass tube in downstream station. Vent and drain tubing also required.	Settlement plates incorporating a pressure transducer embedded during construction, connected by twin hydraulic tubing to a reservoir in downstream station.	Torpedo-mounted pressure transducer connected to fluid-filled tube embedded during construction.	Loop of tubing filled with de-aired water embedded during construction.	Fluid-filled chambers connected along horizontal 2–3 in. diameter tubing.	Fluid-filled chambers connected laterally along horizontal 4–8 in. diameter tubing.

Downloaded from ascelibrary.org by Mining World SA on 06/14/19. Copyright ASCE. For personal use only; all rights reserved.

Table 5-3. (*Continued*) Instrument Comparison.

	Instrument Name					
	Overflow technique	Liquid pressure technique	Hydraulic settlement profilers - standard types	Hydraulic settlement profiler - double fluid type	Liquid-level settlement system	Precision settlement system - water-level type
General considerations	Smooth slope (1–2% approx.) of tubing downward to cells is required. De-aired or filtered water must be used.	Smooth slope of tubing downward to cells is required. De-aired water or a water–glycol solution must be used. Subsequent de-airing is needed periodically to remove air bubbles. Diameter of tubing must be larger to remove bubbles.	Requires operator dexterity for repeatable readings.	Requires mercury.	Horizontal tubing must be reasonably level to avoid air bubble traps.	Horizontal tubing must be level within tight tolerance (less than half the diameter of the tubing).
General methods of reading output[b]	Manual reading on vertical scale or low-range pressure transducer at bottom of indicator tube.	Change of fluid head read on low-range pressure transducer.	Pressure transducer pulled along tube and pressure read at intervals.	Mercury pumped from one end. Pumping pressure read continuously to provide profile.	Displacement transducer connected to a float in chamber.	VW force transducer connected to a float positioned laterally to the horizontal tubing.
Sensor options	Manual (graduated vertical scale) and/or VW or 4–20 mA pressure transducer.	VW or 4–20 mA pressure transducer.	VW or 4–20 mA pressure transducer.	VW or 4–20 mA pressure transducer.	VW or 4–20 mA pressure transducer.	VW or 4–20 mA pressure transducer.
Sensitivity	1 mm (0.04 in.) or 0.25 mm (0.01 in.) typical if electric transducer.	0.25–1 mm (0.01–0.04 in.) depending on measuring range of transducer.	0.25–1 mm (0.01–0.04 in.) depending on measuring range of transducer.	10 mm (0.4 in.) typical, depending on measuring range of transducer.	0.1 mm (0.004 in.) typical.	0.025 mm (0.001 in.) typical.

Downloaded from ascelibrary.org by Mining World SA on 06/14/19. Copyright ASCE. For personal use only; all rights reserved.

Accuracy	1–2 mm (0.04–0.08 in.) for manual and 0.5 mm (0.02 in.) typical for electric.	0.5–2 mm (0.02–0.08 in.) typical.	0.5–2 mm (0.02–0.08 in.) typical.	10 mm (0.4 in.) typical.	0.25–1 mm (0.01–0.04 in.) typical.	0.025 mm (0.001 in.) typical.
Repeatability	1–2 mm (0.04–0.08 in.) for manual and 0.5 mm (0.02 in.) typical for electric.	0.5–2 mm (0.02–0.08 in.) typical.	0.5–2 mm (0.02–0.08 in.) typical.	10 mm (0.4 in.) typical.	0.25–1 mm (0.01–0.04 in.) typical.	0.025 mm (0.001 in.) typical.
Accuracy/ Repeatability[c]	Air bubbles can develop in tubing and will cause considerable reading scatter if not purged.	Air bubbles can develop in tubing and will cause considerable reading scatter if not purged. One reference cell can be used to correct for barometric pressure changes (if unvented transducer) and for fluid density changes with temperature.	Ensure repeatable positioning of the pressure transducer at each interval.	Air bubbles can develop in tubing and will cause considerable reading scatter if not purged.	One reference chamber mounted on a stable location can be used to improve accuracy.	One reference chamber mounted on a stable location can be used to improve accuracy.
Longevity[d]	YYYYY	YYYY	YYY	YYYYY	YYYYY	YYYYY
Maintenance requirements	Periodic overall flushing.	Periodic flushing or de-airing of fluid with suitable apparatus.	Periodic readout inspection.	Periodic flushing with suitable apparatus.	Periodic flushing and inspection.	Periodic flushing and inspection.
Relative expense[e]	Instrument: $$ Readout: $$$ ADAS: $$$$	Instrument: $$ Readout: $$$ ADAS: $$$ to $$$$	Instrument: $$$ Readout: $$$$ ADAS: N/A	Instrument: $$ Readout: $$$ ADAS: $$$$	Instrument: $$$ Readout: $$$ ADAS: $$$$	Instrument: $$$$ Readout: $$$ ADAS: $$$$

[a]"Current practice or legacy" refers to common practice in current U.S. applications. However, legacy instruments may still be in use and available and may have some advantages in particular applications.
[b]General methods of reading output: can include manual, on-demand, and output that can accommodate ADAS (Automated Data Acquisition Systems).
[c]Accuracy/Repeatability considerations: include thermal exposure and long-term stability.
[d]Longevity: Y, 1 year or less; YY, 1–5 years; YYY, 5–10 years; YYYY, 10–15 years; and YYYYY, more than 15 years.
[e]Relative expense: $, $1–$199; $$, $200–$999; $$$, $1000–$2,999; $$$$, $3,000–$9,999; and $$$$$, more than $10,000.

Downloaded from ascelibrary.org by Mining World SA on 06/14/19. Copyright ASCE. For personal use only; all rights reserved.

Table 5-3. (*Continued*) Instrument Comparison.

	Instrument Name	
	Open standpipe piezometers	Observation well
GROUNDWATER LEVEL AND PORE WATER PRESSURES		
Open Standpipe Piezometers (Casagrande Piezometers) and Observation Wells, Section 5.3.1.3		
Parameter measured	Pore water pressure and water level in embankment dams.	Water level in embankment dams.
Common applications	Pore water pressure or water level in downstream filter, chimney and blanket drain, downstream shell.	Water level in downstream shell or foundation.
Current practice or legacy instrument?[a]	Current	Current
Installation specifics/ease of installation	Vertical PVC or steel pipe installed during construction or in borehole, with filter tip at bottom end.	Vertical PVC or steel pipe installed during construction with slotted section at bottom end or along full length.
General considerations	Filter tip can become clogged with time. Needs to be cleaned or purged if instrument becomes unresponsive to water column.	Filter tip can become clogged with time. Needs to be cleaned or purged if instrument becomes unresponsive to water column.
General methods of reading output[b]	Manual: water-level indicator.	Manual: water-level indicator.
Sensor options	VW or strain gauge pressure transducer hanging from collar of standpipe.	VW or strain gauge pressure transducer hanging from collar of standpipe.

Downloaded from ascelibrary.org by Mining World SA on 06/14/19. Copyright ASCE. For personal use only; all rights reserved.

Sensitivity	1 mm or 0.01 ft tape markings.	1 mm or 0.01 ft tape markings.
Accuracy	2 mm (0.08 in.) typical with water-level indicator.	2 mm (0.08 in.) typical with water-level indicator.
Repeatability	2 mm (0.08 in.) typical with water-level indicator.	2 mm (0.08 in.) typical with water-level indicator.
Accuracy/ Repeatability[c]	Water drops on wall of deep standpipes can cause erroneous readings.	Water drops on wall of deep standpipes can cause erroneous readings.
Longevity[d]	YYYY to YYYYY	YYYY to YYYYY
Maintenance requirements	Periodic response testing by adding water and confirming return to previous level. Flushing may be required.	Periodic response testing by adding water and confirming return to previous level. Flushing may be required.
Relative expense[e]	Instrument: $$ Readout: $$ ADAS: N/A	Instrument: $$ Readout: $$ ADAS: N/A

[a]"Current practice or legacy" refers to common practice in current U.S. applications. However, legacy instruments may still be in use and available and may have some advantages in particular applications.
[b]General methods of reading output: can include manual, on-demand, and output that can accommodate ADAS (Automated Data Acquisition Systems).
[c]Accuracy/Repeatability considerations: include thermal exposure and long-term stability.
[d]Longevity: Y, 1 year or less; YY, 1–5 years; YYY, 5–10 years; YYYY, 10–15 years; and YYYYY, more than 15 years.
[e]Relative expense: $, $1–$199; $$, $200–$999; $$$, $1000–$2,999; $$$$, $3,000–$9,999; and $$$$$, more than $10,000.

Downloaded from ascelibrary.org by Mining World SA on 06/14/19. Copyright ASCE. For personal use only; all rights reserved.

Table 5-3. (*Continued*) Instrument Comparison.

	Instrument Name					
	Pneumatic piezometers	Twin-tube hydraulic piezometers	Resistance strain gauge piezometers, Section 5.3.1.5	Vibrating-wire piezometers, Section 5.3.1.6	Fiber optic piezometers, Section 5.3.1.7	Quartz pressure sensors, Section 5.3.1.8
Pneumatic and Hydraulic Piezometers, Section 5.3.1.4						
Parameter measured	Pore water pressure and water level in embankment dams.	Pore water pressure and water level in embankment dams.	Pore water pressure and water level in embankment dams.	Pore water pressure and water level in embankment dams.	Pore water pressure and water level in embankment dams.	High-accuracy water pressure.
Common applications	Pore water pressure or water level in downstream filter, chimney and blanket drain, downstream shell.	Pore water pressure or water level in downstream filter, chimney and blanket drain, downstream shell.	Pore water pressure or water level in downstream filter, chimney and blanket drain, downstream shell.	Pore water pressure or water level in earth core, downstream filter and blanket drain, downstream shell, at foundation contact, in foundation behind grout curtain.	Pore water pressure or water level in earth core, downstream filter and blanket drain, downstream shell, at foundation contact, in foundation behind grout curtain.	Specialized applications (upper and lower reservoir level, seepage weirs, others. . . .). Fairly uncommon for dams.
Current practice or legacy instrument?[a]	Legacy /limited current	Legacy	Current	Current	Current	Current
Installation specifics/ease of installation	Direct embedment in zone of interest or in open standpipe piezometer.	Direct embedment in zone of interest.	Lowered in open standpipe piezometer or direct embedment in zone of interest (less common).	Direct embedment in zone of interest or lowered in open standpipe piezometer. Can be installed in boreholes (rock or soil) by the fully-grouted method.	Direct embedment in zone of interest or lowered in open standpipe piezometer. Can be installed in boreholes (rock or soil) by the fully-grouted method.	N/A

Downloaded from ascelibrary.org by Mining World SA on 06/14/19. Copyright ASCE. For personal use only; all rights reserved.

General considerations	Twin tubing for nitrogen circulation can be subject to kinking or crushing. Must be suitably protected.	De-aired water or a water–glycol solution required. Subsequent de-airing often needed to remove air bubbles.	More sensitive to lightning and transient damage than VW piezometers.	May require lightning and transient damage protection if surface cable runs extend more than approx. 150–300 ft. Signal cable is 4-conductors plus shield. Heavy-duty cable recommended if permanently embedded in earth dams subject to differential movements.	Immune to lightning and transient damage. Cable splicing in case of damage requires specialized equipment.	N/A
General methods of reading output[b]	Portable readout. Automation is possible but requires elaborate hardware and electronics.	Manual readout (Bourdon gauge). Automation is possible with electric pressure transducers.	Manual readout and ADAS.	Manual readout and ADAS.	Manual readout and ADAS.	Manual readout and ADAS.
Sensor options	Portable readout can be designed for low or high water pressure.	VW or 4–20 mA pressure transducer.	Analog (4–20 mA or 0–5 VDC) or digital (RS485) outputs.	Frequency output (typically between 2,000 and 3500 Hz). Digital is possible but uncommon.	Fabry–Perot or Bragg grating interferometry.	Frequency or digital (RS232 and RS485) outputs.
Sensitivity	0.1% F.S. typical	10 mm (0.4 in.) typical, depending on measuring range of transducer.	0.025% F.S. typical.	0.025% F.S. typical.	0.025% F.S. typical.	0.000001% F.S. typical.
Accuracy	±0.25% F.S. typical.	10 mm (0.4 in.) typical.	±0.1% F.S. typical.	±0.1% F.S. typical.	±0.1% F.S. typical.	±0.01% F.S. typical.
Repeatability	0.1% F.S. typical.	10 mm (0.4 in.) typical.	0.025% F.S. typical.	0.025% F.S. typical.	0.025% F.S. typical.	±0.01% F.S. typical.

Downloaded from ascelibrary.org by Mining World SA on 06/14/19. Copyright ASCE. For personal use only; all rights reserved.

Table 5-3. (*Continued*) Instrument Comparison.

	Instrument Name					
	Pneumatic piezometers	Twin-tube hydraulic piezometers	Resistance strain gauge piezometers, Section 5.3.1.5	Vibrating-wire piezometers, Section 5.3.1.6	Fiber optic piezometers, Section 5.3.1.7	Quartz pressure sensors, Section 5.3.1.8
Accuracy/ Repeatability[c]	Very long tubing can reduce accuracy of readings.	Air bubbles can develop in tubing and will cause considerable reading scatter if not purged.	Long lead cables can degrade the signal (for 0–5 VDC especially) and increase risk of lightning damage.	Some VW piezometers have exhibited zero drift in the past. Issue is now controlled by manufacturers but should be spot-checked if piezometers will be permanently embedded.	Zero drift should be spot-checked if piezometers will be permanently embedded.	Digital version is fully characterized and exhibits better accuracy and thermal properties.
Longevity[d]	YYYY to YYYYY	YYYY to YYYYY	YYY to YYYY	YYYYY	Unknown	YYY to YYYY
Maintenance requirements	Verify surface tubing integrity.	Verify surface tubing integrity. Calibrate Bourdon gauge.	Verify surface tubing integrity. If possible, periodic (5 year?) transducer recalibration.	Verify surface tubing integrity. If possible, periodic (5 year?) transducer recalibration.	Verify surface tubing integrity. If possible, periodic (5 year?) transducer recalibration.	Verify surface tubing integrity. If possible, periodic (5 year?) transducer recalibration.
Relative expense[e]	Instrument: $ to $$ Readout: $$$$ ADAS: N/A	Instrument: $$ Readout: $$ or $$$ (if electric) ADAS: N/A or $$$$ (if electric)	Instrument: $$ Readout: $$$ ADAS: $$$ to $$$$	Instrument: $$ Readout: $$$ ADAS: $$$ to $$$$	Instrument: $$ Readout: $$$$ ADAS: $$$$ to $$$$$	Instrument: $$$ Readout: $$$ ADAS: $$$ to $$$$

[a]"Current practice or legacy" refers to common practice in current U.S. applications. However, legacy instruments may still be in use and available and may have some advantages in particular applications.
[b]General methods of reading output: can include manual, on-demand, and output that can accommodate ADAS (Automated Data Acquisition Systems).
[c]Accuracy/Repeatability considerations: include thermal exposure and long-term stability.
[d]Longevity: Y, 1 year or less; YY, 1–5 years; YYY, 5–10 years; YYYY, 10–15 years; and YYYYY, more than 15 years.
[e]Relative expense: $, $1–$199; $$, $200–$999; $$$, $1,000–$2,999; $$$$, $3,000–$9,999; and $$$$$, more than $10,000.

Downloaded from ascelibrary.org by Mining World SA on 06/14/19. Copyright ASCE. For personal use only; all rights reserved.

	Instrument Name		
	Fully grouted piezometers	The Westbay System	The Waterloo System
Multiple Piezometers in a Single Borehole, under Section 5.3.7.5 (Settlement Gauges)			
Parameter measured	Multilevel pore water pressure in soils and interstitial pressure in rocks.	Multilevel pore water pressure in soils and interstitial pressure in rocks.	Multilevel pore water pressure in soils and interstitial pressure in rocks.
Common applications	Multilevel water pressure in embankment dams and dam foundations (rock or soil).	Multilevel water pressure in embankment dams and dam foundations (rock or soil).	Multilevel water pressure in embankment dams and dam foundations (rock or soil).
Current practice or legacy instrument?[a]	Current	Current	Current
Installation specifics/ease of installation	Grouted with bentonite–cement mix in a borehole. Grout mix proportions of cement, bentonite, and water must be adjusted according to surrounding soil or rock type.	Casing couplers incorporating valve measurement port and inflatable packers permanently installed in a borehole.	Series of special double packers with sample entry ports in-between, connected by watertight casing.
General considerations	Individual piezometers can be grouted in, or strings of piezometers pre-assembled on a multiconductor cable can be grouted at once.	Specialized installation procedure. System allows other purposes: fluid sampling or pumping, chemical sensing.	Specialized installation procedure. System can be customized: open tube or dedicated pressure measurement, sampling, purging.
General methods of reading output[b]	Portable readout and ADAS.	Water pressure measured by probe lowered in casing.	Water pressure measured by pressure transducers in sample entry ports. Can be connected to ADAS.
Sensor options	Generally, VW piezometers or other types with low displacement diaphragms.	4–20 mA pressure transducer.	4–20 mA pressure transducer.

Downloaded from ascelibrary.org by Mining World SA on 06/14/19. Copyright ASCE. For personal use only; all rights reserved.

Table 5-3. (*Continued*) Instrument Comparison.

	Instrument Name		
	Fully grouted piezometers	The Westbay System	The Waterloo System
Sensitivity	Depending on piezometer type used.	0.025% F.S. typical.	0.025% F.S. typical.
Accuracy	Depending on piezometer type used.	±0.1% F.S. typical.	±0.1% F.S. typical.
Repeatability	Depending on piezometer type used.	0.025% F.S. typical.	0.025% F.S. typical.
Accuracy/ Repeatability[c]	Permeability of grout mix must be similar, within a tolerance range of 2–3 orders of magnitude, to the permeability of surrounding rock or soil.	Proper installation and sealing with packers is key to multilevel measurements.	Proper installation and sealing with packers is key to multilevel measurements.
Longevity[d]	YYYYY	YYYY to YYYYY	YYYY to YYYYY
Maintenance requirements	Verify surface cable integrity.	Periodic inspection.	Periodic inspection.
Relative expense[e]	Instrument: $$ Readout: $$$ ADAS: $$$ to $$$$	Instrument: $$$ Readout: $$$ ADAS: $$$$	Instrument: $$$ Readout: $$$ ADAS: $$$$

[a]"Current practice or legacy" refers to common practice in current U.S. applications. However, legacy instruments may still be in use and available and may have some advantages in particular applications.
[b]General methods of reading output: can include manual, on-demand, and output that can accommodate ADAS (Automated Data Acquisition Systems).
[c]Accuracy/Repeatability considerations: include thermal exposure and long-term stability.
[d]Longevity: Y, 1 year or less; YY, 1–5 years; YYY, 5–10 years; YYYY, 10–15 years; and YYYYY, more than 15 years.
[e]Relative expense: $, $1–$199; $$, $200–$999; $$$, $1,000–$2,999; $$$$, $3,000–$9,999; and $$$$$, more than $10,000.

Downloaded from ascelibrary.org by Mining World SA on 06/14/19. Copyright ASCE. For personal use only; all rights reserved.

	Instrument Name		
	Calibrated containers and stopwatch	Parshall flumes	V-Notch weirs
SEEPAGE, FLOW, AND TURBIDITY, under Section 5.3.2.1 (Flow Measurement)			
Parameter measured	Water flow rate (gal./min).	Water flow rate (gal./min).	Water flow rate (gal./min).
Common applications	Downstream seepage flow.	Downstream seepage flow.	Downstream seepage flow.
Current practice or legacy instrument?[a]	Current	Current	Current
Installation specifics/ease of installation	Must be sized according to expected flow rate. Requires channeling seepage waters to measuring point.	Must be sized according to expected flow rate. Requires channeling seepage waters to measuring point.	Must be sized according to expected flow rate. Requires channeling seepage waters to measuring point.
General considerations	Manual method. No continuous data.	Can accommodate variable seepage flows and high solids content?	More suitable for lower flow rates. Requires periodic maintenance to ensure proper flow tends to trap sediment.
General methods of reading output[b]	Time to fill calibrated container is converted to flow rate.	Many options: staff gauge, pressure sensor, VW weir monitor, ultrasonic level transducer (see following).	Many options: staff gauge, pressure sensor, VW weir monitor, ultrasonic level transducer (see following).
Sensor options	N/A	Vented strain gauge or vented VW level pressure transducer, 1 or 2 m (3.28 to 6.56 ft) range typical.	Vented strain gauge or vented VW level pressure transducer, 1 or 2 m (3.28 to 6.56 ft) range typical.
Sensitivity	N/A	Depending on level measurement sensor used (see following).	Depending on level measurement sensor used (see following).

Downloaded from ascelibrary.org by Mining World SA on 06/14/19. Copyright ASCE. For personal use only; all rights reserved.

Table 5-3. (*Continued*) Instrument Comparison.

	Instrument Name		
	Calibrated containers and stopwatch	Parshall flumes	V-Notch weirs
Accuracy	0.1 gal./min, depending on container size.	Depending on level measurement sensor used (see following).	Depending on level measurement sensor used (see following).
Repeatability	0.1 gal./min, depending on container size.	Depending on level measurement sensor used (see following).	Depending on level measurement sensor used (see following).
Accuracy/ Repeatability[c]	Operator dependent.	Water level in flume converts to flow rate using conversion equation. System is less accurate at lower end of flow capacity.	Water level in flume converts to flow rate using conversion equation. System is less accurate at lower end of flow capacity.
Longevity[d]	YY		YYYYY
Maintenance requirements	No maintenance. Periodic replacement.	Periodic cleaning.	Periodic cleaning.
Relative expense[e]	Instrument: $ to $$ Readout: N/A ADAS: N/A	Instrument: $$$ Readout: N/A ADAS: N/A	Instrument: $$$ Readout: N/A ADAS: N/A

[a]"Current practice or legacy" refers to common practice in current U.S. applications. However, legacy instruments may still be in use and available and may have some advantages in particular applications.
[b]General methods of reading output: can include manual, on-demand, and output that can accommodate ADAS (Automated Data Acquisition Systems).
[c]Accuracy/Repeatability considerations: include thermal exposure and long-term stability.
[d]Longevity: Y, 1 year or less; YY, 1–5 years; YYY, 5–10 years; YYYY, 10–15 years; and YYYYY, more than 15 years.
[e]Relative expense: $, $1–$199; $$, $200–$999; $$$, $1,000–$2,999; $$$$, $3,000–$9,999; and $$$$$, more than $10,000.

Downloaded from ascelibrary.org by Mining World SA on 06/14/19. Copyright ASCE. For personal use only; all rights reserved.

	Instrument Name				
	Low-range pressure sensors	Vibrating-wire (VW) weir monitor	Ultrasonic and radar level sensors	Flowmeters (velocity meters)	Turbidity meters
Water-Level Measurement Sensors for Flumes and Weirs, under Section 5.3.2.2 (Water-Level Measurement)					
Parameter measured	Water level in flumes and weirs.	Water level in flumes and weirs.	Water level in flumes and weirs.	Water flow rate (gal./min).	Water turbidity.
Common applications	Downstream seepage flow.	Downstream seepage flow.	Downstream seepage flow.	Downstream seepage flow.	Suspended solids in downstream seepage waters.
Current practice or legacy instrument?[a]	Current	Current	Current	Current	Current
Installation specifics/ease of installation	Measurement range must correspond to expected water height in flume or weir.	Measurement range must correspond to expected water height in flume or weir.	Measurement range must correspond to expected water height in flume or weir.	Various design and working principles: generally fitted to a pipe in which water is channeled. Can also be used in open channels but requires separate level measurement.	Submerged in water.
General considerations	Freezing in winter can damage sensor. Vented pressure transducer requires periodic replacement of desiccant cartridge.	Vented VW transducer requires periodic replacement of desiccant cartridge.	Mounted on bracket above water surface. Instrument may be susceptible to lightning or transient damage.	Pipe must be full of water for proper measurement.	Recent models need no maintenance or recalibration, others require periodic wiper replacement.
General methods of reading output[b]	Portable readout or ADAS.	Portable readout or ADAS.	Portable readout or ADAS.	Portable readout or ADAS.	Portable readout or ADAS.
Sensor options	Vented strain gauge or vented VW level pressure transducer, 1 or 2 m (3.28–6.56 ft) range typical.	Vented VW force transducer, 0.15–1.5 m range (0.5–5 ft) range typical.	4–20 mA, 0–10 VDC or digital output, 0.1–3 m (0.3–10 ft) typical.	4–20 mA transmitter, others. 1–1,000 gal./min min–max flow typical.	4–20 mA, 0–10 VDC or digital output, 0.1–400 or 1,000 NTU range typical.

Downloaded from ascelibrary.org by Mining World SA on 06/14/19. Copyright ASCE. For personal use only; all rights reserved.

Table 5-3. (*Continued*) Instrument Comparison.

	Instrument Name				
	Low-range pressure sensors	Vibrating-wire (VW) weir monitor	Ultrasonic and radar level sensors	Flowmeters (velocity meters)	Turbidity meters
Sensitivity	0.025% F.S. typical.	0.025% F.S. typical.	0.025% F.S. typical.	0.025% F.S. typical.	0.025% F.S. typical.
Accuracy	±0.1% F.S. typical.	±0.1% F.S. typical.	±0.1–0.2% F.S. typical.	±0.25% F.S. typical.	±1.00% to ±3.00% F.S. typical.
Repeatability	0.025% F.S. typical.	0.025% F.S. typical.	±0.025% F.S. typical.	0.025% F.S. typical.	0.025% F.S. typical.
Accuracy/ Repeatability[c]	Protect from external shocks, freezing and water/humidity ingress in vent tube.	Protect from external shocks, freezing and water/humidity ingress in vent tube.	Repeatability can be affected by water surface and environment.	Minimum–maximum flow range vary with pipe diameter (1–4 in. typical, or bigger).	Fouling of optical surface can compromise repeatability.
Longevity[d]	YYY to YYYY	YYYY	YYY to YYYY	YYYY	YYYY
Maintenance requirements	Periodic inspection and cleaning. Periodic (5 year?) transducer recalibration.	Periodic inspection and cleaning. Periodic (5 year?) transducer recalibration.	Periodic inspection and cleaning. Periodic (5 year?) transducer recalibration.	Periodic inspection and cleaning. Periodic (5 year?) transducer recalibration.	Periodic inspection and cleaning. Periodic (5 year?) transducer recalibration.
Relative expense[e]	Instrument: $$$ Readout: $$$ ADAS: $$$ to $$$$	Instrument: $$$ Readout: $$$ ADAS: $$$ to $$$$	Instrument: $$$ to $$$$ Readout: $$$ ADAS: $$$ to $$$$	Instrument: $$$$ Readout: $$$ ADAS: $$$ to $$$$	Instrument: $$$ Readout: $$$ ADAS: $$$ to $$$$

[a]"Current practice or legacy" refers to common practice in current U.S. applications. However, legacy instruments may still be in use and available and may have some advantages in particular applications.
[b]General methods of reading output: can include manual, on-demand, and output that can accommodate ADAS (Automated Data Acquisition Systems).
[c]Accuracy/Repeatability considerations: include thermal exposure and long-term stability.
[d]Longevity: Y, 1 year or less; YY, 1–5 years; YYY, 5–10 years; YYYY, 10–15 years; and YYYYY, more than 15 years.
[e]Relative expense: $, $1–$199; $$, $200–$999; $$$, $1,000–$2,999; $$$$, $3,000–$9,999; and $$$$$, more than $10,000.

Downloaded from ascelibrary.org by Mining World SA on 06/14/19. Copyright ASCE. For personal use only; all rights reserved.

	Instrument Name					
		Electrical strain gauges				
	Mechanical strain gauges	Resistance (Carlson strain meters)	Vibrating-wire gauges	Sister bar	Strain gauge rosettes in concrete, Section 5.3.4.2	Dummy gauges in concrete, Section 5.3.4.3
STRESS AND STRAIN						
Strain Measurement Instruments, Section 5.3.4						
Parameter measured	Strain	Strain	Strain	Strain	Strain	Strain
Common applications	Strain in concrete, steel.	Strain in concrete, steel.	Strain in concrete, steel.	Strain in concrete.	2D and 3D strain.	Correction for hydration effects.
Current practice or legacy instrument?[a]	Current	Current/legacy	Current	Current	Current	Current
Installation specifics/ease of installation	Reference studs bonded or grouted to concrete/steel surface, approx. 10 cm (4 in.) apart.	Embedded in concrete.	Embedded in concrete or surface-mounted on steel.	Embedded in concrete.	2–6 strain gauges mounted in different orientations on a bracket.	Strain gauge installed in container with padded sides.
General considerations	Requires operator dexterity for repeatable readings.	Length of gauge should be 3–4 times size the maximum size of concrete aggregate.	Length of gauge should be 3–4 times size the maximum size of concrete aggregate.	Installed parallel to larger diameter rebar, or used in replacement of VW embedment strain gauge.	Considerable care required during concrete casting.	Considerable care required during concrete casting.

Downloaded from ascelibrary.org by Mining World SA on 06/14/19. Copyright ASCE. For personal use only; all rights reserved.

Table 5-3. (*Continued*) Instrument Comparison.

	Instrument Name					
		Electrical strain gauges				
	Mechanical strain gauges	Resistance (Carlson strain meters)	Vibrating-wire gauges	Sister bar	Strain gauge rosettes in concrete, Section 5.3.4.2	Dummy gauges in concrete, Section 5.3.4.3
General methods of reading output[b]	Mechanical reading: high-resolution micrometer.	Carlson portable readout or ADAS.	VW portable readout or ADAS.	VW portable readout or ADAS.	VW portable readout or ADAS.	VW portable readout or ADAS.
Sensor options	Micrometer or removable spring-loaded potentiometer or LVDT.	Carlson	VW	VW	VW	VW
Sensitivity	0.001 mm (0.0004 in.), e.g., 10 micro-strains.	2–5 micro-strains depending on base length of strain gauge.	0.4 micro-strain.	0.4 micro-strain.	Same as VW strain gauges.	Same as VW strain gauges.
Accuracy	0.001 mm (0.0004 in.), e.g., 10 micro-strains.	±0.5% F.S. typical (±0.1% F.S. if individually calibrated).	±0.5% F.S. for VW typical (±0.1% F.S. if individually calibrated).	±0.25% F.S. typical.	Same as VW strain gauges.	Same as VW strain gauges.
Repeatability	0.001 mm (0.0004 in.), e.g., 10 micro-strains.	2–5 micro-strains depending on base length of strain gauge.	1 micro-strain.	1 micro-strain.	Same as VW strain gauges.	Same as VW strain gauges.

Downloaded from ascelibrary.org by Mining World SA on 06/14/19. Copyright ASCE. For personal use only; all rights reserved.

Accuracy/ Repeatability[c]	Ensure repeatable positioning of micrometer. Use reference measuring bar.	Carlson strain gauges are typically not calibrated individually. Full scale is 1,000–4,000 micro-strains depending on base length of strain gauge.	VW strain gauges are typically not calibrated individually. Full scale is typically 3,000 micro-strains.	Sister bars are typically calibrated individually. Full scale is typically 3,000 micro-strains.	Same as VW strain gauges.	Same as VW strain gauges.
Longevity[d]	YYYY	YYYYY	Surface-mounted: YYYYY Embedded: YYYYY	YYYYY	YYYYY	YYYYY
Maintenance requirements	Periodic instrument and reference stud inspection.	Verify surface cable integrity.	Verify surface cable integrity, inspect gauge if surface mounted.	Verify surface cable integrity.	Verify surface cable integrity.	Verify surface cable integrity.
Relative expense[e]	Instrument: $ Readout: $$$ ADAS: N/A	Instrument: $$ Readout: $$$ ADAS: $$$ to $$$$	Instrument: $ Readout: $$$ ADAS: $$$ to $$$$	Instrument: $$ Readout: $$$ ADAS: $$$ to $$$$	Instrument: $$ Readout: $$$ ADAS: $$$ to $$$$	Instrument: $ Readout: $$$ ADAS: $$$ to $$$$

[a]"Current practice or legacy" refers to common practice in current U.S. applications. However, legacy instruments may still be in use and available and may have some advantages in particular applications.
[b]General methods of reading output: can include manual, on-demand, and output that can accommodate ADAS (Automated Data Acquisition Systems).
[c]Accuracy/Repeatability considerations: include thermal exposure and long-term stability.
[d]Longevity: Y, 1 year or less; YY, 1–5 years; YYY, 5–10 years; YYYY, 10–15 years; and YYYYY, more than 15 years.
[e]Relative expense: $, $1–$199; $$, $200–$999; $$$, $1,000–$2,999; $$$$, $3,000–$9,999; and $$$$$, more than $10,000.

Downloaded from ascelibrary.org by Mining World SA on 06/14/19. Copyright ASCE. For personal use only; all rights reserved.

Table 5-3. (*Continued*) Instrument Comparison.

	Instrument Name			
		Total pressure cells and concrete stress cells		
	Stress inclusions	Diaphragm	Hydraulic	Distributed strain measurement using optical fiber, Section 5.3.4.4
Stress Measurements, Section 5.3.5				
Parameter measured	Stress	Stress	Stress	Strain
Common applications	Stress in concrete and rock.	Total stress.	Total stress acting perpendicular to the cell.	Distributed strain in soil embankments and concrete.
Current practice or legacy instrument?[a]	Current	Legacy	Current	Current
Installation specifics/ease of installation	Wedged in small diameter diamond-drilled borehole (EX, BX, or NX) with installation tool.	Direct embedment in concrete.	Direct embedment in soil or concrete.	Fiber optical cable embedded in soil or concrete, or mounted on concrete surface.
General considerations	Proper installation is critical. Can be a delicate process.	Cell stiffness must be similar to concrete stiffness.	If in soil, suitable compaction around cell required so that cell does not become a rigid or soft inclusion.	Specialized splicing in case of cable break.
General methods of reading output[b]	VW portable readout or ADAS.	Portable readout.	VW portable readout or ADAS.	ADAS with specialized optical interface.

Downloaded from ascelibrary.org by Mining World SA on 06/14/19. Copyright ASCE. For personal use only; all rights reserved.

Sensor options	VW	Carlson or resistive strain gauge.	VW or 4–20 mA pressure transducer.	Brillouin optical scattering.
Sensitivity	2–10 psi depending on borehole diameter.	0.1% F.S. typical.	0.025% F.S. typical.	10 micro-strains typical, 3 ft spatial resolution typical.
Accuracy	20%, full-scale range of 10,000 psi.	±0.5% F.S. typical.	±0.1 to 0.5% F.S. typical.	20 micro-strains typical, depends on cable length and measurement time.
Repeatability	N/A (0.5–5% estimated).	±0.5% F.S. typical.	±0.025% F.S. typical.	10–20 micro-strains typical.
Accuracy/Repeatability[c]	Protect from vibrations. Installation in highly fractured rock less accurate.	Proper contact of cell with concrete must be ensured.	Uniform soil compaction is important so that cell does not respond as soft inclusion.	Accuracy can be improved by increasing measurement time.
Longevity[d]	YYY	YYYYY	YYYYY	Unknown (YYYYY?)
Maintenance requirements	Verify surface cable integrity.	Verify surface cable integrity.	Verify surface cable integrity.	Verify surface cable integrity.
Relative expense[e]	Instrument: $$ Readout: $$$ ADAS: $$$ to $$$$	Instrument: $$ Readout: $$$ ADAS: $$$ to $$$$	Instrument: $$ Readout: $$$ ADAS: $$$ to $$$$	Instrument: $ (price of fiber optic cable only) Readout and ADAS: $$$$$

[a]"Current practice or legacy" refers to common practice in current U.S. applications. However, legacy instruments may still be in use and available and may have some advantages in particular applications.
[b]General methods of reading output: can include manual, on-demand, and output that can accommodate ADAS (Automated Data Acquisition Systems).
[c]Accuracy/Repeatability considerations: include thermal exposure and long-term stability.
[d]Longevity: Y, 1 year or less; YY, 1–5 years; YYY, 5–10 years; YYYY, 10–15 years; and YYYYY, more than 15 years.
[e]Relative expense: $, $1–$199; $$, $200–$999; $$$, $1,000–$2,999; $$$$, $3,000–$9,999; and $$$$$, more than $10,000.

Downloaded from ascelibrary.org by Mining World SA on 06/14/19. Copyright ASCE. For personal use only; all rights reserved.

Table 5-3. (*Continued*) Instrument Comparison.

	Instrument Name		
	Strain gauge load cells (electrical-resistance-type)	Vibrating-wire load cells	Hydraulic load cells
LOAD, SECTION 5.3.5.2			
Parameter measured	Load	Load	Load
Common applications	Load in ground anchors and rockbolts.	Load in ground anchors and rockbolts.	Load in ground anchors and rockbolts.
Current practice or legacy instrument?[a]	Current	Current	Current
Installation specifics/ease of installation	Thick bearing plates for uniform load spreading are required.	Thick bearing plates for uniform load spreading are required.	Thick bearing plates for uniform load spreading are required.
General considerations	Eccentric or uneven loading should be avoided.	Eccentric or uneven loading should be avoided.	Eccentric or uneven loading should be avoided.
General methods of reading output[b]	Portable readout or ADAS.	Portable readout or ADAS.	Bourdon gauge, portable readout or ADAS.
Sensor options	Resistive strain gauge.	VW	Bourdon gauge, VW or 4–20 mA pressure transducer.
Sensitivity	0.025% F.S. typical.	0.025% F.S. typical.	0.25 to 1% F.S. typical with Bourdon gauge.

Downloaded from ascelibrary.org by Mining World SA on 06/14/19. Copyright ASCE. For personal use only; all rights reserved.

Accuracy	±0.5% F.S. typical.	±0.5% F.S. typical.	±0.25 to 1% F.S. typical with Bourdon gauge.
Repeatability	±0.025% F.S. typical.	±0.025% F.S. typical.	±0.25 to 1% F.S. typical with Bourdon gauge.
Accuracy/ Repeatability[c]	Accuracy can vary depending on thickness of end bearing plates and if load is nonaxial.	Accuracy can vary depending on thickness of end bearing plates and if load is nonaxial.	Accuracy can vary depending on thickness of end bearing plates and if load is nonaxial.
Longevity[d]	YYYYY	YYYYY	YYYYY
Maintenance requirements	Verify surface cable integrity, inspect load cell.	Verify surface cable integrity, inspect load cell.	Verify surface cable integrity, inspect load cell.
Relative expense[e]	Instrument: $$$ Readout: $$$ ADAS: $$$ to $$$$	Instrument: $$$ Readout: $$$ ADAS: $$$ to $$$$	Instrument: $$$ Readout: $$$ ADAS: $$$ to $$$$

[a]"Current practice or legacy" refers to common practice in current U.S. applications. However, legacy instruments may still be in use and available and may
have some advantages in particular applications.
[b]General methods of reading output: can include manual, on-demand, and output that can accommodate ADAS (Automated Data Acquisition Systems).
[c]Accuracy/Repeatability considerations: include thermal exposure and long-term stability.
[d]Longevity: Y, 1 year or less; YY, 1–5 years; YYY, 5–10 years; YYYY, 10–15 years; and YYYYY, more than 15 years.
[e]Relative expense: $, $1–$199; $$, $200–$999; $$$, $1,000–$2,999; $$$$, $3,000–$9,999; and $$$$$, more than $10,000.

Downloaded from ascelibrary.org by Mining World SA on 06/14/19. Copyright ASCE. For personal use only; all rights reserved.

Table 5-3. (*Continued*) Instrument Comparison.

	Instrument Name			
	Thermistors, Section 5.3.6.1	RTDs (resistance temperature devices), Section 5.3.6.2	Carlson instruments Section 5.3.6.3	Thermocouples Section 5.3.6.4
TEMPERATURE				
Parameter measured	Temperature	Temperature	Temperature	Temperature
Common applications	Leakage detection in embankments, concrete and dam foundations, concrete curing temperature during construction to avoid cracking, temperature-induced deflections in dams.	Leakage detection in embankments, concrete and dam foundations, concrete curing temperature during construction to avoid cracking, temperature-induced deflections in dams.	Leakage detection in embankments, concrete and dam foundations, concrete curing temperature during construction to avoid cracking, temperature-induced deflections in dams.	Leakage detection in embankments, concrete and dam foundations, concrete curing temperature during construction to avoid cracking, temperature-induced deflections in dams.
Current practice or legacy instrument?[a]	Current	Current	Current/legacy	Current
Installation specifics/ease of installation	Installed in boreholes or direct embedment in soil or concrete. All vibrating-wire instruments incorporate a thermistor.	Installed in boreholes or direct embedment in soil or concrete. All vibrating-wire instruments incorporate a thermistor.	Installed in boreholes or direct embedment in soil or concrete. All vibrating-wire instruments incorporate a thermistor.	Installed in boreholes or direct embedment in soil or concrete. All vibrating-wire instruments incorporate a thermistor.
General considerations	Single thermistor at end of 2-conductor cable, or string of thermistors, up to 48, on multiconductor cable if analog or up to 256 on 4-conductor cable if digital.	Single sensor at end of 2-conductor cable.	Single sensor at end of 2-conductor cable.	Single sensor at end of 2-conductor cable.

Downloaded from ascelibrary.org by Mining World SA on 06/14/19. Copyright ASCE. For personal use only; all rights reserved.

General methods of reading output[b]	Portable readout or ADAS.	Portable readout or ADAS.	Portable readout or ADAS.	Portable readout or ADAS.
Sensor options	NTC (negative temperature coefficient) 2,252; 3K; 5K; 10K Ω.	100–1K Ω.	Carlson resistance.	J, K, T, and E types.
Sensitivity	±0.16°F typical.	±0.16°F typical.	0.1°F typical.	0.3°F typical.
Accuracy	±0.16°F typical.	±0.16°F typical.	±0.5°F typical.	±0.3°F typical.
Repeatability	±0.16°F typical.	±0.16°F typical.	±0.1°F typical.	±0.3°F typical.
Accuracy/ Repeatability[c]	Higher-resistance thermistor suitable for long lead length, but less accurate. 3K Ω is a good compromise. Limited to 300°F.	Not suitable for long lead cable. Can measure higher temperatures than thermistors.	Long lead cables can degrade the signal.	Suitable for long leads. Reference required. Wide temperature range.
Longevity[d]	YYYY to YYYYY (if embedded)	YYYY to YYYYY	YYYYY	YYY to YYYY
Maintenance requirements	Verify surface cable integrity.	Verify surface cable integrity.	Verify surface cable integrity.	Verify surface cable integrity.
Relative expense[e]	Instrument: $ Readout: $$$ ADAS: $$$ to $$$$	Instrument: $ Readout: $$$ ADAS: $$$ to $$$$	Instrument: $ Readout: $$$ ADAS: $$$ to $$$$	Instrument: $ Readout: $$ ADAS: $$$ to $$$$

[a]"Current practice or legacy" refers to common practice in current U.S. applications. However, legacy instruments may still be in use and available and may have some advantages in particular applications.
[b]General methods of reading output: can include manual, on-demand, and output that can accommodate ADAS (Automated Data Acquisition Systems).
[c]Accuracy/Repeatability considerations: include thermal exposure and long-term stability.
[d]Longevity: Y, 1 year or less; YY, 1–5 years; YYY, 5–10 years; YYYY, 10–15 years; and YYYYY, more than 15 years.
[e]Relative expense: $, $1–$199; $$, $200–$999; $$$, $1,000–$2,999; $$$$, $3,000–$9,999; and $$$$$, more than $10,000.

Downloaded from ascelibrary.org by Mining World SA on 06/14/19. Copyright ASCE. For personal use only; all rights reserved.

Table 5-3. (*Continued*) Instrument Comparison.

	Instrument Name		
	Vibrating-wire devices	Integrated circuit (IC) temperature sensors	Distributed temperature measurement using optical fiber, Section 5.3.4.4
Other Devices, Section 5.3.6.5			
Parameter measured	Temperature	Temperature	Temperature
Common applications	Leakage detection in embankments, concrete and dam foundations, concrete curing temperature during construction to avoid cracking, temperature-induced deflections in dams.	Leakage detection in embankments, concrete and dam foundations, concrete curing temperature during construction to avoid cracking, temperature-induced deflections in dams.	Temperature in embankments for leakage detection.
Current practice or legacy instrument?[a]	Current	Current	Current
Installation specifics/ease of installation	Installed in boreholes or direct embedment in soil or concrete. All vibrating-wire instruments incorporate a thermistor.	Incorporated in certain types of instruments, e.g., tiltmeters.	Fiber optical cable embedded in soil or installed in observation wells.
General considerations	Single sensor at end of 2-conductor cable.	Single sensor at end of 2-conductor cable.	Specialized splicing in case of cable break.
General methods of reading output[b]	Portable readout or ADAS.	Portable readout or ADAS.	ADAS with specialized optical interface.
Sensor options	VW	Analog or digital output.	Raman optical scattering.