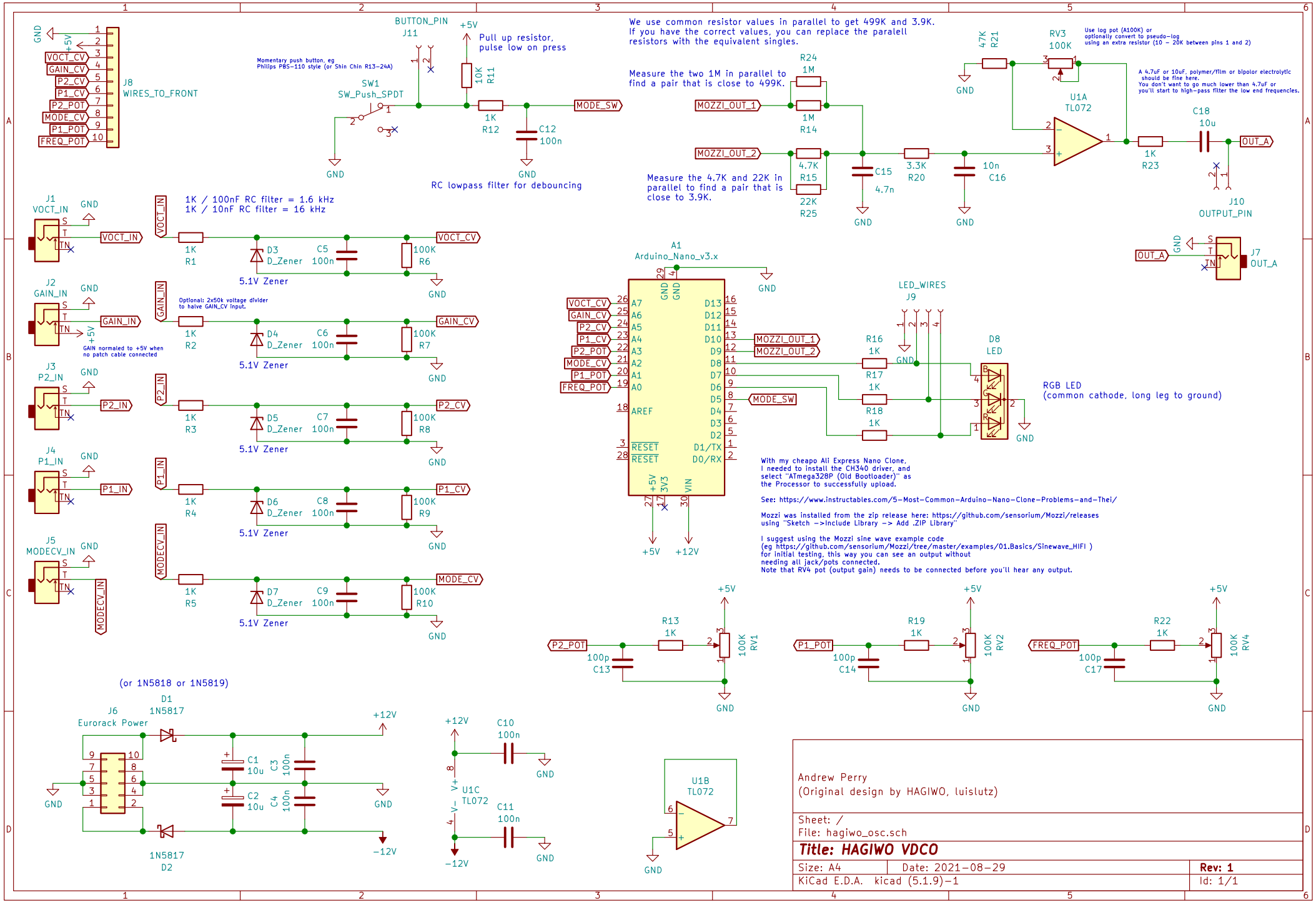
J8
WIRES_TO_FRONT
GND
+5V
VOCT_CV
GAIN_CV
P2_CV
P1_CV
P2_POT
MODE_CV
P1_POT
FREQ_POT
BUTTON_PIN
J11
+5V
Pull up resistor,
pulse low on press
Momentary push button, eg
Philips PB5-110 style (or Shin Chin R13-24A)
SW1
SW_Push_SPDT
10K
R11
1K
R12
C12
100n
MODE_SW
GND
RC lowpass filter for debouncing
We use common resistor values in parallel to get 499K and 3.9K.
If you have the correct values, you can replace the paralell
resistors with the equivalent singles.
Measure the two 1M in parallel to
find a pair that is close to 499K.
R24
1M
1M
R14
MOZZI_OUT_1
MOZZI_OUT_2
4.7K
R15
22K
R25
Measure the 4.7K and 22K in
parallel to find a pair that is
close to 3.9K.
C15
4.7n
3.3K
R20
10n
C16
47K
R21
RV3
100K
Use log pot (A100K) or
optionally convert to pseudo-log
using an extra resistor (10 - 20K between pins 1 and 2)
U1A
TL072
A 4.7uF or 10uF, polymer/film or bipolar electrolytic
should be fine here.
You don't want to go much lower than 4.7uF or
you'll start to high-pass filter the low end frequencies.
C18
10u
1K
R23
OUT_A
J10
OUTPUT_PIN
J7
OUT_A
J1
VOCT_IN
J2
GAIN_IN
GAIN normaled to +5V when
no patch cable connected
J3
P2_IN
J4
P1_IN
J5
MODECV_IN
1K / 100nF RC filter = 1.6 kHz
1K / 10nF RC filter = 16 kHz
Optional: 2x50k voltage divider
to halve GAIN_CV input.
1K
R1
R2
R3
R4
R5
D3
D4
D5
D6
D7
D_Zener
5.1V Zener
C5
C6
C7
C8
C9
100n
100K
R6
R7
R8
R9
R10
A1
Arduino_Nano_v3.x
AREF
RESET
D13
D12
D11
D10
D9
D8
D7
D6
D5
D4
D3
D2
D1/TX
D0/RX
+5V
3V3
VIN
+12V
LED_WIRES
J9
R16
1K
R17
1K
R18
1K
D8
LED
RGB LED
(common cathode, long leg to ground)
With my cheapo Ali Express Nano Clone,
I needed to install the CH340 driver, and
select "ATmega328P (Old Bootloader)" as
the Processor to successfully upload.
See: https://www.instructables.com/5-Most-Common-Arduino-Nano-Clone-Problems-and-Thei/
Mozzi was installed from the zip release here: https://github.com/sensorium/Mozzi/releases
using "Sketch ->Include Library -> Add .ZIP Library"
I suggest using the Mozzi sine wave example code
(eg https://github.com/sensorium/Mozzi/tree/master/examples/01.Basics/Sinewave_HIFI)
for initial testing, this way you can see an output without
needing all jack/pots connected.
Note that RV4 pot (output gain) needs to be connected before you'll hear any output.
R13
1K
100p
C13
100K
RV1
R19
1K
100p
C14
100K
RV2
R22
1K
100p
C17
100K
RV4
(or 1N5818 or 1N5819)
D1
1N5817
J6
Eurorack Power
C1
10u
C2
10u
C3
100n
C4
100n
1N5817
D2
-12V
C10
100n
U1C
TL072
C11
100n
U1B
TL072
Andrew Perry
(Original design by HAGIWO, luislutz)
Sheet: /
File: hagiwo_osc.sch
Title: HAGIWO VDCO
Size: A4
Date: 2021-08-29
Rev: 1
KiCad E.D.A. kicad (5.1.9)-1
Id: 1/1