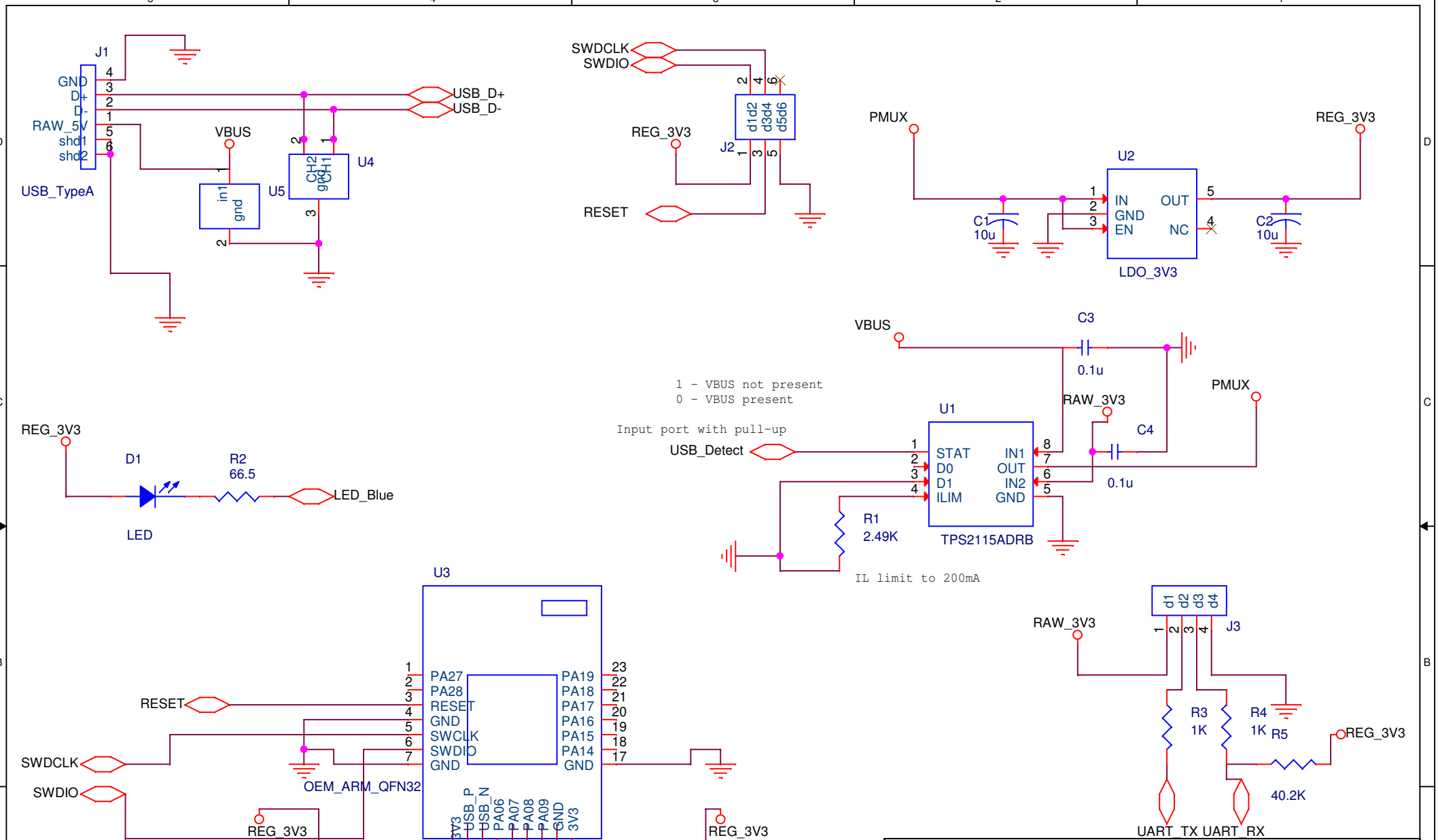

Kirale Technologies

General Vara de Rey 9, 5B
26001 Logrono
La Rioja
Spain

Title
KTDG102

Size	Document Number	Rev
A	Schematic	1

Date: Friday, November 17, 2017 Sheet 1 of 1