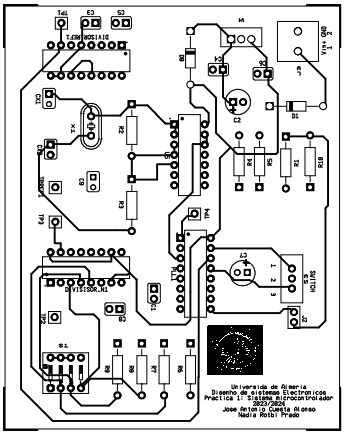Ultiboard-Design2 - 10/05/2024 - 21:30:52