# Rapid Prototyping Application of Additive Manufacturing

Jose Rodriguez

Department of Mechanical Engineering, The University of Texas at Dallas, TX, USA

## Problem Statement

Fused Deposition Modeling (FDM) is an extended branch of additive manufacturing process under material extrusion [1]. This technique involves the layer-by-layer deposition of material to create intricate and finer components. In this project explores the design and analysis of a turbinelike structure using FDM. The focus is on understanding the transient thermal and static behavior of the design through FEA simulations employing tools like ANSYS.

## Introduction

The project involves simulating the FDM three-dimensional printing process for a miniature turbine blade. The material, typically supplied as a continuous filament wound on spools, is heated to a semi-liquid state before being precisely deposited according to computer-controlled paths. As each layer solidifies and bonds with the previous layer, a three-dimensional structure emerges, such as this turbine structure. FDM technology has revolutionized manufacturing by enabling the production of intricate components that would be challenging or impossible to create using conventional manufacturing techniques, particularly for small-scale, customized parts like miniature blades. Its accessibility, relatively low cost, and compatibility with various thermoplastics have made FDM a milestone technology in rapid prototyping applications across engineering disciplines.

## Methodology

The turbine blade geometry used in this analysis is based on Design 1 provided in the project specifications. The CAD model (Design1.x_t) represents a miniature turbine blade with the following key geometric features: a rectangular base to rest the blade geometry on top and easy to remove after printing. Key notable features of this design consist of 10 turbine blades printed for this geometry and 10 layers starting from the top of the glass base. The overall average surface area of the blades (according to the mesh details) is approximately 22.95$mm^2$, fairly small yet optimizable enough to simulate a the capabilities of FDM at a miniature scale. Geometry preparations required the specimen to be oriented in a fixed position  to the glass plate. Layer adhesion, strength, surface finish, material consumption, etc. are all necessary for support structures. Some parts can be exhibiting greater strength along the horizontal (x) plane compared to vertical (Z) direction where layer interfaces create potential failure points.

: 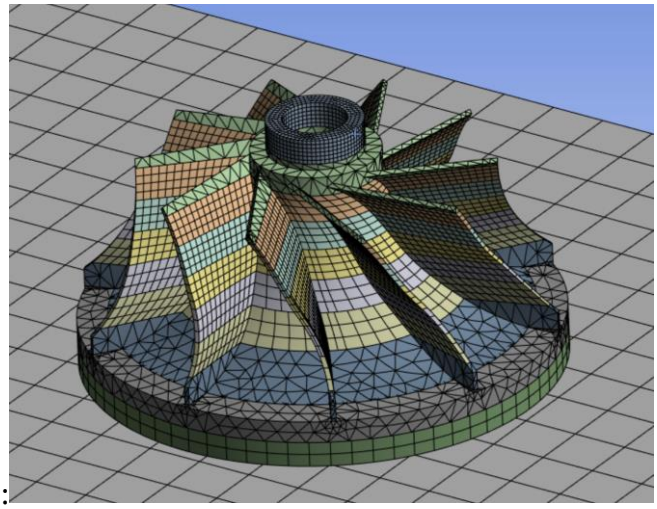

**Illustration 1**: mesh view of 10-fin turbine

## Materials Selection and Properties

The material property for each parts are specifically thermoplastic polymers for comparative analysis used in this study. the turbine geometry consists of the following in table 1[2]

Materials and their properties

| Properties | ABS HIGH-IMPACT |
|---|---|
| **Density** | 1.03 $\frac{g}{cm^3}$ |
| **Youngs Modulus** | 2.2 **GPa** |
| **Poisson ration** | 0.35-0.38 |
| **Thermal Conductivity** | 0.14-0.21 $\frac{W}{m*k}$ |
| **Specific Heat Capacity** | 1.26 – 1.68 $\frac{J}{gK}$ |
| **Thermal Expansion Coefficient** | 72 – 108 *10^-6 °C |
| **Melting Temperature** | 220°C - 250°C<br>(428ºF-482ºF) |

**Table 1:** material and properties of ABS HIGH-IMPACT

| Properties | GLASS, SODA-LIME |
|---|---|
| **Density** | 2.5 $\frac{g}{cm^3}$ |
| **Youngs Modulus** | 72 **GPa** |
| **Poisson ration** | 0.23 |

| | |
|---|---|
| **Thermal Conductivity** | 0.7-1.3 |
| **Specific Heat Capacity** | $0.88 \frac{kj}{kg*K}$ |
| **Thermal Expansion Coefficient** | $8.3 * 10^{-6}$ /°C |
| **Melting Temperature** | 1400-1600°C<br>(2550-2912 ºF) |

**Table 2:** Glass soda-lime material details

These specific materials were chosen for their bond and ease of removal after printing. ABS is the perfect material chosen for the type of use due to the extremities the turbine may experience such as tension, tensile stress, pressure and more. For the base of the print job, Glass soda-lime is perfect especially in context of low-temperature glass 3D printing. This makes it easier to process in 3D printing methods that rely on heating and softening of materials.

The finite element mesh was generated with specific attention to critical areas of the turbine blade geometry to ensure accurate simulation of thermal and mechanical behavior. Mesh sensitivity analysis indicates high sensitivity on the blades than compared to the bottom base of the turbine.

The element type, size, and resolution are chosen to balance computational efficiency and result precision, ensuring that the analysis accurately captures the transient thermal and mechanical behavior of the turbine's component. Each component is discretised into finite elements. The minimum element size for finite element analysis depends on the geometry. Based on the results chosen are recorded on table below:

| | Turbine design |
|---|---|
| Minimum element size | 0.5 mm to 1.0 mm in the heat affected zone |
| Resolution | 4 |
| Number of elements | 15466 |
| Number of nodes | 68857 |
| Shape | Hexahedral/ Tetrahedral |

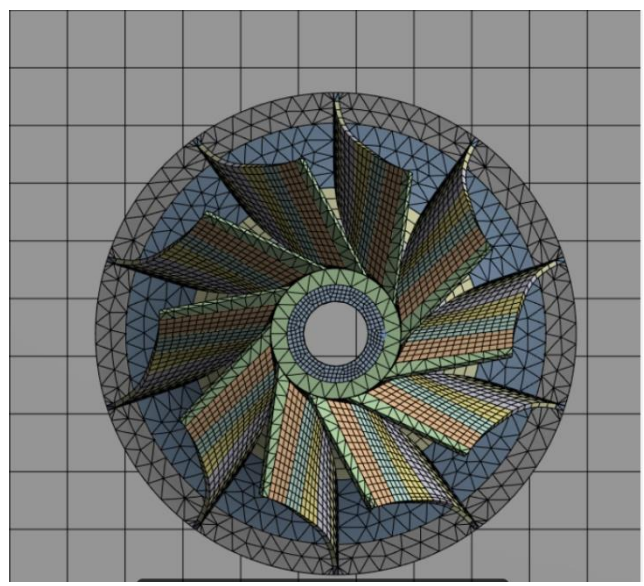

**Table 3** Number of elements and nodes

The selected mesh configuration ensures that discretization errors are minimized, providing confidence in the accuracy of the subsequent thermal and structural analysis.

## Simulation setup

Simulation was setup starting with thermal analysis configured to accurately simulate the layer-by-layer deposition process characteristic of FDM technology. A heat flow capacity of $1*10^{-7}$W was applied to each layer. Heat flow represents the thermal energy imparted by extrusion nozzle during deposition process. The initial temperature of the filament material was set at 22℃, corresponding to the typical extrusion temperature for ABS material.

For the thermal boundary conditions, the glass base plate played a significant role in heat dissipation during the simulated printing process. These properties were essential in accurately modeling the heat transfer between the first printed layer and the build platform. A convection coefficient of $1.24 * 10^{-6}$ W/(m²·K) was applied to all exposed surfaces to account for natural convection cooling during the printing process.

The transient thermal simulation was executed with a time step size of 10 seconds to capture the rapid thermal changes during the deposition process. The total simulation duration was set to 100 seconds, encompassing the complete printing process from the deposition of the first layer to the cooling of the final structure. This time frame was sufficient to observe both the acute thermal gradients during active printing and the more gradual temperature equilibration during the cooling phase.

| | Steps | Time [s] | Heat Flow [W] |
|---|---|---|---|
| 1 | 1 | 0. | = 1.e-008 |
| 2 | 1 | 10. | 1.e-008 |
| 3 | 2 | 20. | = 1.e-008 |
| 4 | 3 | 30. | = 1.e-008 |
| 5 | 4 | 40. | = 1.e-008 |
| 6 | 5 | 50. | = 1.e-008 |
| 7 | 6 | 60. | = 1.e-008 |
| 8 | 7 | 70. | = 1.e-008 |
| 9 | 8 | 80. | = 1.e-008 |
| 10 | 9 | 90. | = 1.e-008 |
| 11 | 10 | 100. | = 1.e-008 |
| * | | | |

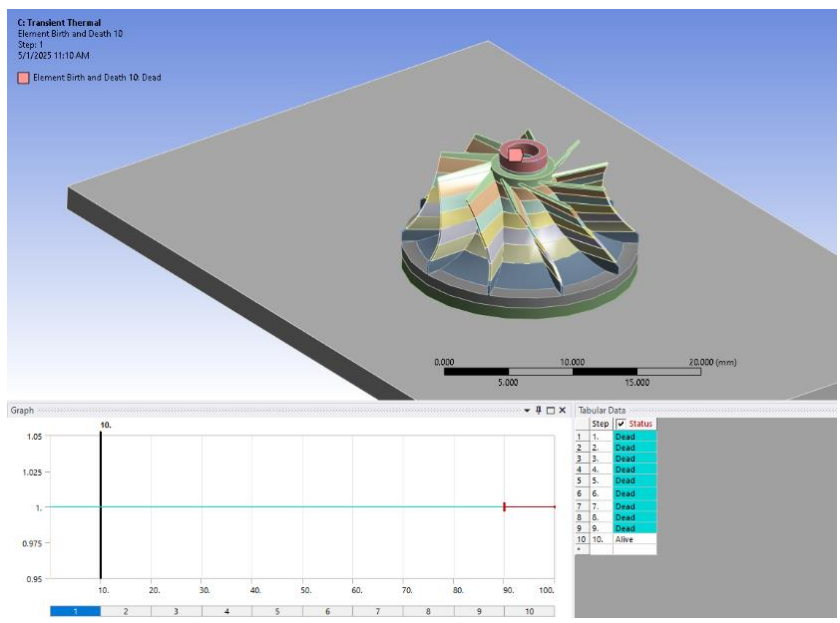


**Illustration 1:** Transient thermal Element Birth and Death

| | Temperature [°C] | Convection Coefficient [W/mm²·°C] |
|---|---|---|
| 1 | 1. | 1.24e-006 |
| 2 | 10. | 2.67e-006 |
| 3 | 100. | 5.76e-006 |
| 4 | 200. | 7.25e-006 |
| 5 | 300. | 8.3e-006 |
| 6 | 500. | 9.84e-006 |
| 7 | 700. | 1.101e-005 |
| 8 | 1000. | 1.24e-005 |
| * | | |

**Table 4**: Convection Coefficient step and temperature

Static Structural Analysis

The static structural analysis was conducted as a sequential coupled analysis following the thermal simulation. Primary condition consisted of temperature imported directly from thermal analysis results. This approach ensured that thermal strain and stress reflects thermal history by the part during printing process. A reference temperature of 22℃ was established.

The structural boundary conditions were designed to represent constraints experienced by the printed part. The base of the turbine was constrained with a fixed platform (glass base) support condition along the interface with the build platform, restricting all 6 degrees of freedom three translational and three rotational) in this region. This constraint simulates the adhesion of the first printed layer to the glass build plate during the manufacturing process.

Contact conditions were established between each layer starting from the top of the target layer and the bottom of the contact layer using a bonded type formulation. These contact definitions were critical for accurately modeling the interaction between different features of the turbine blade geometry during thermal loading. This process was repeated for 11 times until the last two layers at the top. An example of where each contact was chosen on Illustration 4.

The structural analysis was configured to capture large deformations, enabling a more accurate representation of the geometric nonlinearity that may occur due to significant thermal

gradients. This approach provides a more realistic prediction of the part behavior under the thermal loads experienced during the FDM process.

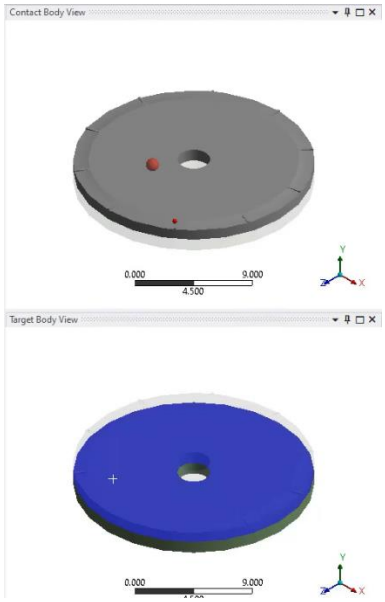


**Illustration 2:** top square: contact body view. Bottom square: Target body view and

## Results and Observations

The transient thermal analysis provides crucial insights into the FDM printing process, revealing how gradients develop and dissipate as layers sequentially deposited. The transient thermal of the turbine blade printed with ABS revealed significant impact across the geometry during the printing process. The temperature distribution displayed a concentration of heat at the central hub region of the blade, where maximum temperature reached approximately 30.406°C. This peak temperature during the active printing phase, particularly when the nozzle was depositing material at the complex inner geometry.

The thermal contour visualization demonstrates a clear temperature gradient radiating outward from the center of the blade toward the edges, with temperatures decreasing progressively from the central hub (30.406°C) to the blade tips (approximately 2-27°C, shown in green-yellow regions) and finally to the build plate interface (21.856°C, shown in blue). This gradient pattern aligns with expectations for FDM printing, where newly deposited material retains heat while previously printed layers gradually cool through conduction to the build plate and convection to the surrounding environment.

Green curve at chart 1 represents the temperature at the central hub region. The middle curve (blue) tracks temperatures at the mid-blade region, displaying more moderate temperatures with a slight downward trend over time. The lower curve (red) represents temperatures near the build plate interface, remaining relatively stable around 22-23°C throughout the monitored period, confirming the effective heat-sinking capacity of the glass build plate.

The total deformation results provide insights into the dimensional accuracy and geometric stability of the printed turbine blade. ABS exhibited a maximum deformation of 0.00907mm. The deformation was predominantly in the outward direction, occurring at the tips of the blades . The different deformation behavior can be attributed to the heat expansion occurring during printing, as heat is applied material “expands” however, ABS was marginally unaffected due to its superior capability to heat.

The solution for the finite elements model was solved using ANSYS 24 version.

| CASE 1: Transient Thermal Analysis | |
|---|---|
| 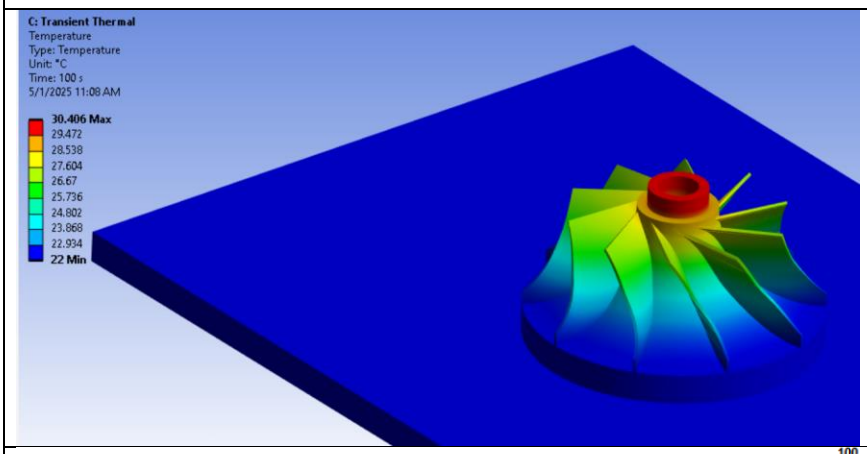 | Equivalent Stress<br>30.406 °C maximum |
| 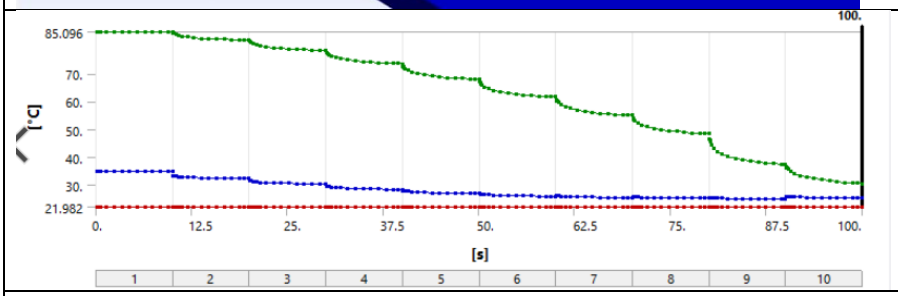 | Chart 1<br>Gradual cooling from 0-100 seconds |
| CASE 2: Static Analysis | |
| 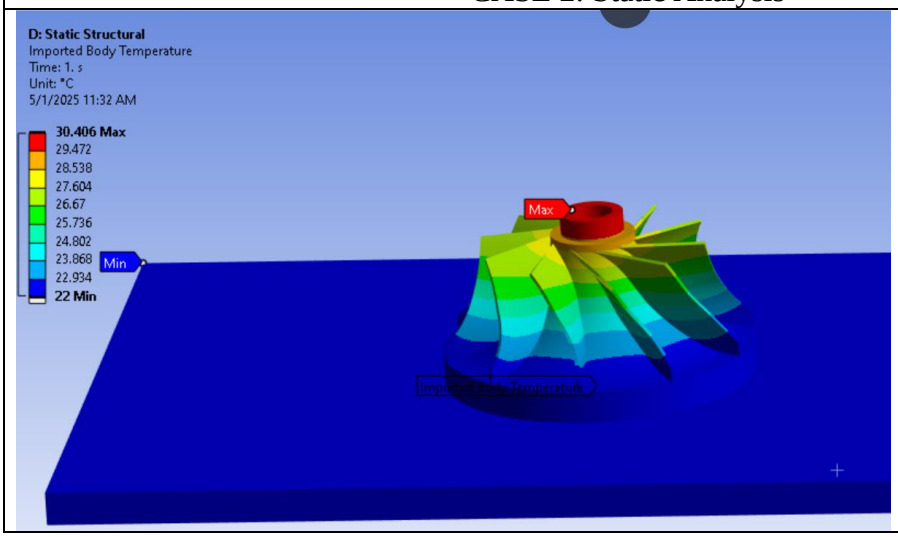 | Imported body temperature |

| | |
|---|---|
| 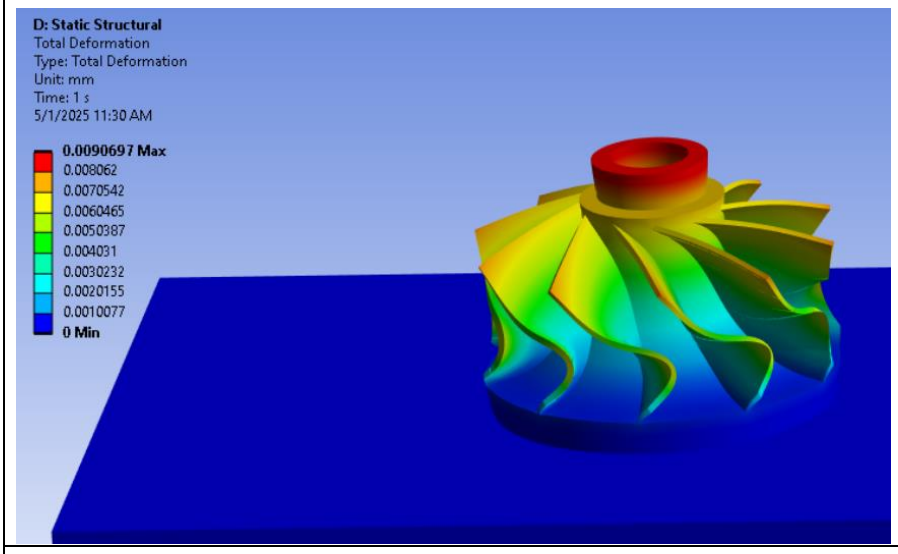 | Total Deformation<br>0.0090697 mm max deformation |
| 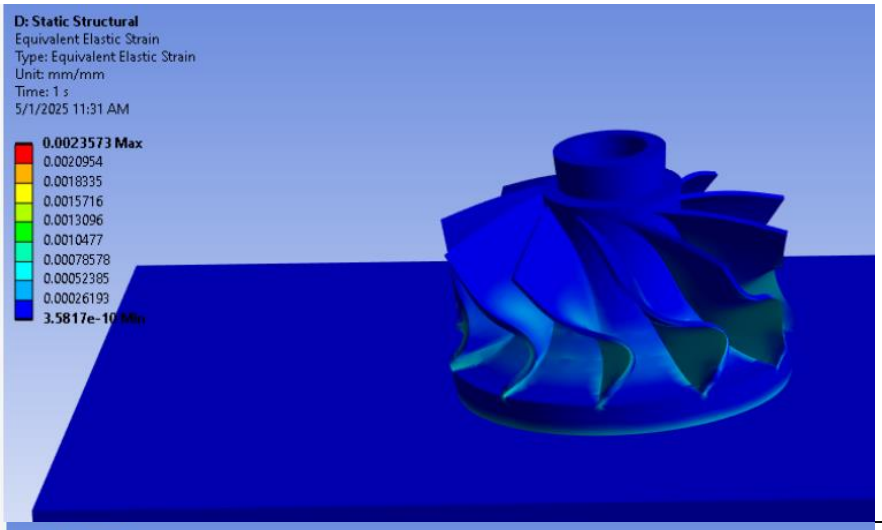 | Equivalent Elastic Strain<br>0.0023573 mm/mm max strain |
| 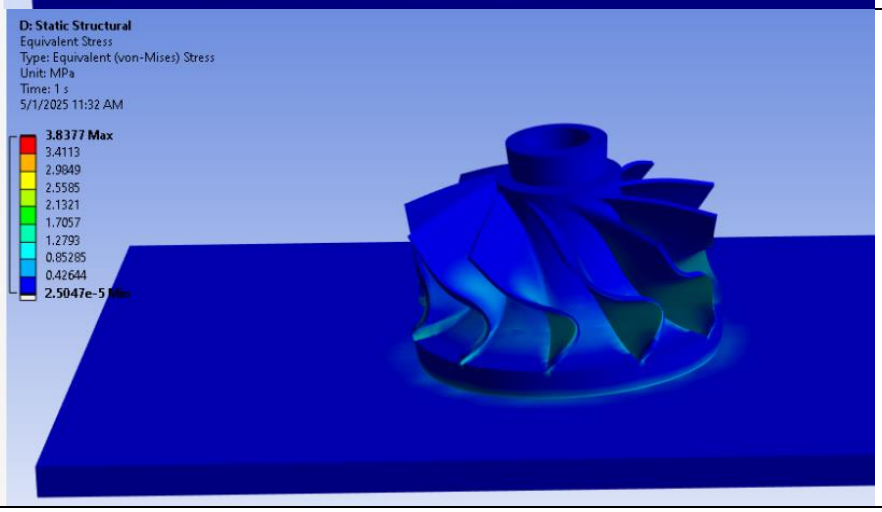 | Equivalent (von-mises) Stress<br>3.8377 max MPa |

## Discussion

The thermal analysis of the turbine blade printed using FDM technology reveals significant insights into the process-property relationships of additive manufacturing. Comparing the two materials, ABS and glass soda-lime, we observe distinct differences in their thermal response profiles during the printing process. The thermal gradients developed in ABS were more pronounced, leading to expected results when constructing this complex geometry handling heat with minimal strain.

The mechanical analysis demonstrates that ABS exhibits superior structural performance with lower stress concentrations and more uniform strain distribution. This can be attributed to its thermoplastic foundation, Acrylonitrile Butadiene Styrene, which allows for better accommodation of thermal stresses developed during the printing process.

The build orientation used in this study started as a bottom-up approach, from base layer making its way to the top decreasing in diameter (near pyramid shape) and the layer-by-layer heat application with a heat flow capacity of $1 \times 10^{-7}$ W resulted in exceptional heat displacement during the printing process as heat radiates from the outside in. These findings highlight the importance of FDM application when it comes to high absorption material such as, safety helmets, hulls, insulated power tools and more [2].

## Conclusion

Additive Manufacturing is a novel process of modern manufacturing capable of near limitless possibilities for new construction. Material repair and increasing span life is the current endeavor for AM and testing this would change manufacturing tactics. In this study, FDM (Fused Deposition Modeling) represents one of the most widely adopted additive manufacturing technologies for rapid prototyping of complex geometries. This process involves the layer-by-layer deposition of thermoplastic filaments that are melted through an extrusion nozzle. The transient thermal analysis simulated maximum temperatures concentrated at the central hub region and minimum temperatures at the build plate interface. These gradients play a critical role in determining the final mechanical properties of the printed component. Rates of approximately 1°C/second in the hottest regions, highlighting the dynamic thermal environment to the layer-by-layer deposition process.

Future work should focus on experimental validation of these simulation results, particularly verification of the predicted stress concentrations. Investigation into advanced print strategies, such as variable layer thickness or adaptive infill patterns, could potentially mitigate some of the thermal gradient-induced stresses identified in this study.

## References

[1]*What is FDM (fused deposition modeling) 3D printing?*. Protolabs Network. (n.d.). https://www.hubs.com/knowledge-base/what-is-fdm-3d-printing/#how-does-fdm-3d-printing-work

[2] From Bruker Nano GmbH – Electron Microscope Analyzers, AIMPLAS, F., ASTG, F., Corporation, F. S., Tek, F. B., & Picarro, F. (2013, June 11). *Acrylonitrile butadiene styrene - abs high impact*. AZoM. https://www.azom.com/article.aspx?ArticleID=360

[3] The comparison of the mechanical characteristics of ABS using three different plastic production techniques. (n.d.-a). https://www.scirp.org/journal/paperinformation?paperid=125093