Table of Contents

1	Title
2	Block Diagram
3	KL26Z MCU
4	OpenSDA INTERFACE
5	I/O Headers and Power Supply

Revisions & Change Log

Rev	Description	Date	Approved
X1	Initial Draft	Oct 18	Chung
X2	Feedbacks Implemented	Oct 22	Chung
X3	Feedbacks from Chung Implemented	Oct 23	Chung
X4	Components changed as per the feedbacks	Oct 24	Chung
X5	RF and Bluetooth headers added	Oct 28	Chung
X6	Arduino connections added	Nov 1	Chung
X7	Net review and fix	Nov 3	Chung
A	Release to production, prototype build	Nov 8	Chung
A1	openSDA reset capacitor fix	Nov 22	del Rey
B	Release to production, production build	Jan 20	Chung
C	Release to production, production build	Feb 06	Chung
D	Fixing I2C swap to headers	Feb 26	Chung

FREEDOM K64F

freescale

Automotive, Industrial & Multi-Market Solutions Group

6501 William Cannon Drive West Austin, TX 78735-8598

ICAP Classification: FCP: FIUO: PUBI: X

Designer: Rafael del Rey	Drawing Title: FRDM-K64F		
Drawn by: Sudhasha(LnT)	Page Title: TITLE PAGE		
Approved: Chung	Size C	Document Number SCH-28163 | PDF: SPF-28163	Rev D
	Date: Wednesday, February 26, 2014	Sheet 1 of 6	

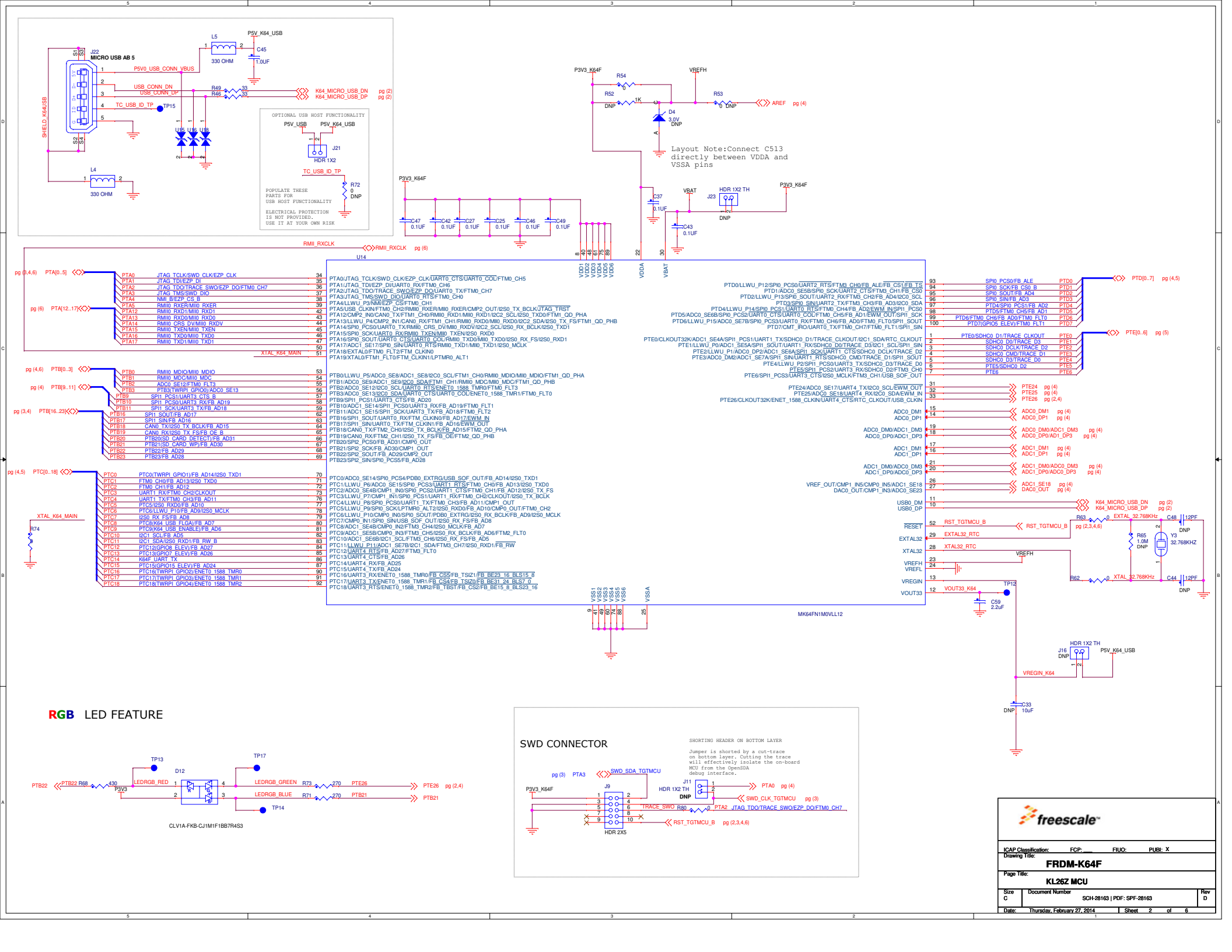

J22
MICRO USB AB 5
SHIELD_K64USB
P5V0_USB_CONN_VBUS
USB_CONN_DN
USB_CONN_DP
TC_USB_ID_TP
TP15
L5
330 OHM
P5V_K64_USB
C45
1.0UF
R49
R46
K64_MICRO_USB_DN pg (2)
K64_MICRO_USB_DP pg (2)
U15 U16 U18
L4
330 OHM
OPTIONAL USB HOST FUNCTIONALITY
P5V_USB
P5V_K64_USB
J21
HDR 1X2
TC_USB_ID_TP
R72
0
DNP
POPULATE THESE PARTS FOR USB HOST FUNCTIONALITY
ELECTRICAL PROTECTION IS NOT PROVIDED. USE IT AT YOUR OWN RISK
P3V3_K64F
R54
R52
1K
DNP
VREFH
R53
0
DNP
AREF pg (4)
D4
3.0V
DNP
Layout Note:Connect C513 directly between VDDA and VSSA pins
C37
0.1UF
VBAT
J23
HDR 1X2 TH
DNP
C43
0.1UF
C47 0.1UF
C42 0.1UF
C27 0.1UF
C25 0.1UF
C46 0.1UF
C49 0.1UF
RMII_RXCLK
RMII_RXCLK pg (6)
U14
VDD1 VDD2 VDD3 VDD4 VDD5 VDD6
VDDA
VBAT
pg (3,4,6) PTA[0..5]
pg (6) PTA[12..17]
PTA0 JTAG_TCLK/SWD_CLK/EZP_CLK
PTA1 JTAG_TDI/EZP_DI
PTA2 JTAG_TDO/TRACE_SWO/EZP_DO/FTM0_CH7
PTA3 JTAG_TMS/SWD_DIO
PTA4 NMI_B/EZP_CS_B
PTA5 RMII0_RXER/MII0_RXER
PTA12 RMII0_RXD1/MII0_RXD1
PTA13 RMII0_RXD0/MII0_RXD0
PTA14 RMII0_CRS_DV/MII0_RXDV
PTA15 RMII0_TXEN/MII0_TXEN
PTA16 RMII0_TXD0/MII0_TXD0
PTA17 RMII0_TXD1/MII0_TXD1
XTAL_K64_MAIN
pg (4,6) PTB[0..3]
pg (4) PTB[9..11]
pg (3,4) PTB[16..23]
PTB0 RMII0_MDIO/MII0_MDIO
PTB1 RMII0_MDC/MII0_MDC
PTB2 ADC0_SE12/FTM0_FLT3
PTB3 PTB3(TWRPI_GPIO0)/ADC0_SE13
PTB9 SPI1_PCS1/UART3_CTS_B
PTB10 SPI1_PCS0/UART3_RX/FB_AD19
PTB11 SPI1_SCK/UART3_TX/FB_AD18
PTB16 SPI1_SOUT/FB_AD17
PTB17 SPI1_SIN/FB_AD16
PTB18 CAN0_TX/I2S0_TX_BCLK/FB_AD15
PTB19 CAN0_RX/I2S0_TX_FS/FB_OE_B
PTB20 PTB20(SD_CARD_DETECT)/FB_AD31
PTB21 PTB21(SD_CARD_WP)/FB_AD30
PTB22 PTB22/FB_AD29
PTB23 PTB23/FB_AD28
pg (4,5) PTC[0..18]
XTAL_K64_MAIN
R74
PTC0 PTC0(TWRPI_GPIO1)/FB_AD14/I2S0_TXD1
PTC1 FTM0_CH0/FB_AD13/I2S0_TXD0
PTC2 FTM0_CH1/FB_AD12
PTC3 UART1_RX/FTM0_CH2/CLKOUT
PTC4 UART1_TX/FTM0_CH3/FB_AD11
PTC5 PTC5/I2S0_RXD0/FB_AD10
PTC6 PTC6/LLWU_P10/FB_AD9/I2S0_MCLK
PTC7 I2S0_RX_FS/FB_AD8
PTC8 PTC8(K64_USB_FLGA)/FB_AD7
PTC9 PTC9(K64_USB_ENABLE)/FB_AD6
PTC10 I2C1_SCL/FB_AD5
PTC11 I2C1_SDA/I2S0_RXD1/FB_RW_B
PTC12 PTC12(GPIO8_ELEV)/FB_AD27
PTC13 PTC13(GPIO7_ELEV)/FB_AD26
PTC14 K64F_UART_TX
PTC15 PTC15(GPIO15_ELEV)/FB_AD24
PTC16 PTC16(TWRPI_GPIO2)/ENET0_1588_TMR0
PTC17 PTC17(TWRPI_GPIO3)/ENET0_1588_TMR1
PTC18 PTC18(TWRPI_GPIO4)/ENET0_1588_TMR2
PTA0/JTAG_TCLK/SWD_CLK/EZP_CLK/UART0_CTS/UART0_COL/FTM0_CH5
PTA1/JTAG_TDI/EZP_DI/UART0_RX/FTM0_CH6
PTA2/JTAG_TDO/TRACE_SWO/EZP_DO/UART0_TX/FTM0_CH7
PTA3/JTAG_TMS/SWD_DIO/UART0_RTS/FTM0_CH0
PTA4/LLWU_P3/NMI/EZP_CS/FTM0_CH1
PTA5/USB_CLKIN/FTM0_CH2/RMII0_RXER/MII0_RXER/CMP2_OUT/I2S0_TX_BCLK/JTAG_TRST
PTA12/CMP2_IN0/CAN0_TX/FTM1_CH0/RMII0_RXD1/MII0_RXD1/I2C2_SCL/I2S0_TXD0/FTM1_QD_PHA
PTA13/LLWU_P4/CMP2_IN1/CAN0_RX/FTM1_CH1/RMII0_RXD0/MII0_RXD0/I2C2_SDA/I2S0_TX_FS/FTM1_QD_PHB
PTA14/SPI0_PCS0/UART0_TX/RMII0_CRS_DV/MII0_RXDV/I2C2_SCL/I2S0_RX_BCLK/I2S0_TXD1
PTA15/SPI0_SCK/UART0_RX/RMII0_TXEN/MII0_TXEN/I2S0_RXD0
PTA16/SPI0_SOUT/UART0_CTS/UART0_COL/RMII0_TXD0/MII0_TXD0/I2S0_RX_FS/I2S0_RXD1
PTA17/ADC1_SE17/SPI0_SIN/UART0_RTS/RMII0_TXD1/MII0_TXD1/I2S0_MCLK
PTA18/EXTAL0/FTM0_FLT2/FTM_CLKIN0
PTA19/XTAL0/FTM1_FLT0/FTM_CLKIN1/LPTMR0_ALT1
PTB0/LLWU_P5/ADC0_SE8/ADC1_SE8/I2C0_SCL/FTM1_CH0/RMII0_MDIO/MII0_MDIO/FTM1_QD_PHA
PTB1/ADC0_SE9/ADC1_SE9/I2C0_SDA/FTM1_CH1/RMII0_MDC/MII0_MDC/FTM1_QD_PHB
PTB2/ADC0_SE12/I2C0_SCL/UART0_RTS/ENET0_1588_TMR0/FTM0_FLT3
PTB3/ADC0_SE13/I2C0_SDA/UART0_CTS/UART0_COL/ENET0_1588_TMR1/FTM0_FLT0
PTB9/SPI1_PCS1/UART3_CTS/FB_AD20
PTB10/ADC1_SE14/SPI1_PCS0/UART3_RX/FB_AD19/FTM0_FLT1
PTB11/ADC1_SE15/SPI1_SCK/UART3_TX/FB_AD18/FTM0_FLT2
PTB16/SPI1_SOUT/UART0_RX/FTM_CLKIN0/FB_AD17/EWM_IN
PTB17/SPI1_SIN/UART0_TX/FTM_CLKIN1/FB_AD16/EWM_OUT
PTB18/CAN0_TX/FTM2_CH0/I2S0_TX_BCLK/FB_AD15/FTM2_QD_PHA
PTB19/CAN0_RX/FTM2_CH1/I2S0_TX_FS/FB_OE/FTM2_QD_PHB
PTB20/SPI2_PCS0/FB_AD31/CMP0_OUT
PTB21/SPI2_SCK/FB_AD30/CMP1_OUT
PTB22/SPI2_SOUT/FB_AD29/CMP2_OUT
PTB23/SPI2_SIN/SPI0_PCS5/FB_AD28
PTC0/ADC0_SE14/SPI0_PCS4/PDB0_EXTRG/USB_SOF_OUT/FB_AD14/I2S0_TXD1
PTC1/LLWU_P6/ADC0_SE15/SPI0_PCS3/UART1_RTS/FTM0_CH0/FB_AD13/I2S0_TXD0
PTC2/ADC0_SE4B/CMP1_IN0/SPI0_PCS2/UART1_CTS/FTM0_CH1/FB_AD12/I2S0_TX_FS
PTC3/LLWU_P7/CMP1_IN1/SPI0_PCS1/UART1_RX/FTM0_CH2/CLKOUT/I2S0_TX_BCLK
PTC4/LLWU_P8/SPI0_PCS0/UART1_TX/FTM0_CH3/FB_AD11/CMP1_OUT
PTC5/LLWU_P9/SPI0_SCK/LPTMR0_ALT2/I2S0_RXD0/FB_AD10/CMP0_OUT/FTM0_CH2
PTC6/LLWU_P10/CMP0_IN0/SPI0_SOUT/PDB0_EXTRG/I2S0_RX_BCLK/FB_AD9/I2S0_MCLK
PTC7/CMP0_IN1/SPI0_SIN/USB_SOF_OUT/I2S0_RX_FS/FB_AD8
PTC8/ADC1_SE4B/CMP0_IN2/FTM3_CH4/I2S0_MCLK/FB_AD7
PTC9/ADC1_SE5B/CMP0_IN3/FTM3_CH5/I2S0_RX_BCLK/FB_AD6/FTM2_FLT0
PTC10/ADC1_SE6B/I2C1_SCL/FTM3_CH6/I2S0_RX_FS/FB_AD5
PTC11/LLWU_P11/ADC1_SE7B/I2C1_SDA/FTM3_CH7/I2S0_RXD1/FB_RW
PTC12/UART4_RTS/FB_AD27/FTM3_FLT0
PTC13/UART4_CTS/FB_AD26
PTC14/UART4_RX/FB_AD25
PTC15/UART4_TX/FB_AD24
PTC16/UART3_RX/ENET0_1588_TMR0/FB_CS5/FB_TSIZ1/FB_BE23_16_BLS15_8
PTC17/UART3_TX/ENET0_1588_TMR1/FB_CS4/FB_TSIZ0/FB_BE31_24_BLS7_0
PTC18/UART3_RTS/ENET0_1588_TMR2/FB_TBST/FB_CS2/FB_BE15_8_BLS23_16
VSS1 VSS2 VSS3 VSS4 VSS5 VSS6
VSSA
MK64FN1M0VLL12
PTD0/LLWU_P12/SPI0_PCS0/UART2_RTS/FTM3_CH0/FB_ALE/FB_CS1/FB_TS
PTD1/ADC0_SE5B/SPI0_SCK/UART2_CTS/FTM3_CH1/FB_CS0
PTD2/LLWU_P13/SPI0_SOUT/UART2_RX/FTM3_CH2/FB_AD4/I2C0_SCL
PTD3/SPI0_SIN/UART2_TX/FTM3_CH3/FB_AD3/I2C0_SDA
PTD4/LLWU_P14/SPI0_PCS1/UART0_RTS/FTM0_CH4/FB_AD2/EWM_IN/SPI1_PCS0
PTD5/ADC0_SE6B/SPI0_PCS2/UART0_CTS/UART0_COL/FTM0_CH5/FB_AD1/EWM_OUT/SPI1_SCK
PTD6/LLWU_P15/ADC0_SE7B/SPI0_PCS3/UART0_RX/FTM0_CH6/FB_AD0/FTM0_FLT0/SPI1_SOUT
PTD7/CMT_IRO/UART0_TX/FTM0_CH7/FTM0_FLT1/SPI1_SIN
PTE0/CLKOUT32K/ADC1_SE4A/SPI1_PCS1/UART1_TX/SDHC0_D1/TRACE_CLKOUT/I2C1_SDA/RTC_CLKOUT
PTE1/LLWU_P0/ADC1_SE5A/SPI1_SOUT/UART1_RX/SDHC0_D0/TRACE_D3/I2C1_SCL/SPI1_SIN
PTE2/LLWU_P1/ADC0_DP2/ADC1_SE6A/SPI1_SCK/UART1_CTS/SDHC0_DCLK/TRACE_D2
PTE3/ADC0_DM2/ADC1_SE7A/SPI1_SIN/UART1_RTS/SDHC0_CMD/TRACE_D1/SPI1_SOUT
PTE4/LLWU_P2/SPI1_PCS0/UART3_TX/SDHC0_D3/TRACE_D0
PTE5/SPI1_PCS2/UART3_RX/SDHC0_D2/FTM3_CH0
PTE6/SPI1_PCS3/UART3_CTS/I2S0_MCLK/FTM3_CH1/USB_SOF_OUT
PTE24/ADC0_SE17/UART4_TX/I2C0_SCL/EWM_OUT
PTE25/ADC0_SE18/UART4_RX/I2C0_SDA/EWM_IN
PTE26/CLKOUT32K/ENET_1588_CLKIN/UART4_CTS/RTC_CLKOUT/USB_CLKIN
ADC0_DM1
ADC0_DP1
ADC0_DM0/ADC1_DM3
ADC0_DP0/ADC1_DP3
ADC1_DM1
ADC1_DP1
ADC1_DM0/ADC0_DM3
ADC1_DP0/ADC0_DP3
VREF_OUT/CMP1_IN5/CMP0_IN5/ADC1_SE18
DAC0_OUT/CMP1_IN3/ADC0_SE23
USB0_DM
USB0_DP
RESET
EXTAL32
XTAL32
VREFH
VREFL
VREGIN
VOUT33
SPI0_PCS0/FB_ALE
SPI0_SCK/FB_CS0_B
SPI0_SOUT/FB_AD4
SPI0_SIN/FB_AD3
PTD4/SPI0_PCS1/FB_AD2
PTD5/FTM0_CH5/FB_AD1
PTD6/FTM0_CH6/FB_AD0/FTM0_FLT0
PTD7/GPIO5_ELEV)/FTM0_FLT1
PTE0/SDHC0_D1/TRACE_CLKOUT
SDHC0_D0/TRACE_D3
SDHC0_DCLK/TRACE_D2
SDHC0_CMD/TRACE_D1
SDHC0_D3/TRACE_D0
PTE5/SDHC0_D2
PTE6
PTD[0..7] pg (4,5)
PTE[0..6] pg (5)
PTE24 pg (4)
PTE25 pg (4)
PTE26 pg (2,4)
ADC0_DM1 pg (4)
ADC0_DP1 pg (4)
ADC0_DM0/ADC1_DM3 pg (4)
ADC0_DP0/AD1_DP3 pg (4)
ADC1_DM1 pg (4)
ADC1_DP1 pg (4)
ADC1_DM0/ADC0_DM3 pg (4)
ADC1_DP0/ADC0_DP3 pg (4)
ADC1_SE18 pg (4)
DAC0_OUT pg (4)
K64_MICRO_USB_DN pg (2)
K64_MICRO_USB_DP pg (2)
RST_TGTMCU_B
RST_TGTMCU_B pg (2,3,4,6)
EXTAL32_RTC
XTAL32_RTC
VREFH
VOUT33_K64
TP12
C59
2.2uF
R63
0
EXTAL_32.768KHz
C48
12PF
DNP
R65
1.0M
DNP
Y3
32.768KHZ
R62
0
XTAL_32.768KHz
C44
12PF
DNP
HDR 1X2 TH
J16
DNP
P5V_K64_USB
VREGIN_K64
C33
DNP
10uF
RGB LED FEATURE
TP13
TP17
PTB22
PTB22 R68
430
P3V3
D12
LEDRGB_RED
LEDRGB_GREEN
LEDRGB_BLUE
R73
270
R71
270
PTE26
PTB21
PTE26 pg (2,4)
PTB21
TP14
CLV1A-FKB-CJ1M1F1BB7R4S3
SWD CONNECTOR
SHORTING HEADER ON BOTTOM LAYER
Jumper is shorted by a cut-trace on bottom layer. Cutting the trace will effectively isolate the on-board MCU from the OpenSDA debug interface.
pg (3) PTA3
SWD_SDA_TGTMCU
P3V3_K64F
J9
HDR 2X5
J11
HDR 1X2 TH
DNP
PTA0 pg (4)
SWD_CLK_TGTMCU pg (3)
TRACE_SWO
R80
0
PTA2 JTAG_TDO/TRACE_SWO/EZP_DO/FTM0_CH7
RST_TGTMCU_B pg (2,3,4,6)
freescale
ICAP Classification: FCP: ___ FIUO: PUBI: X
Drawing Title: FRDM-K64F
Page Title: KL26Z MCU
Size C
Document Number SCH-28163 | PDF: SPF-28163
Rev D
Date: Thursday, February 27, 2014
Sheet 2 of 6

OpenSDA Interface

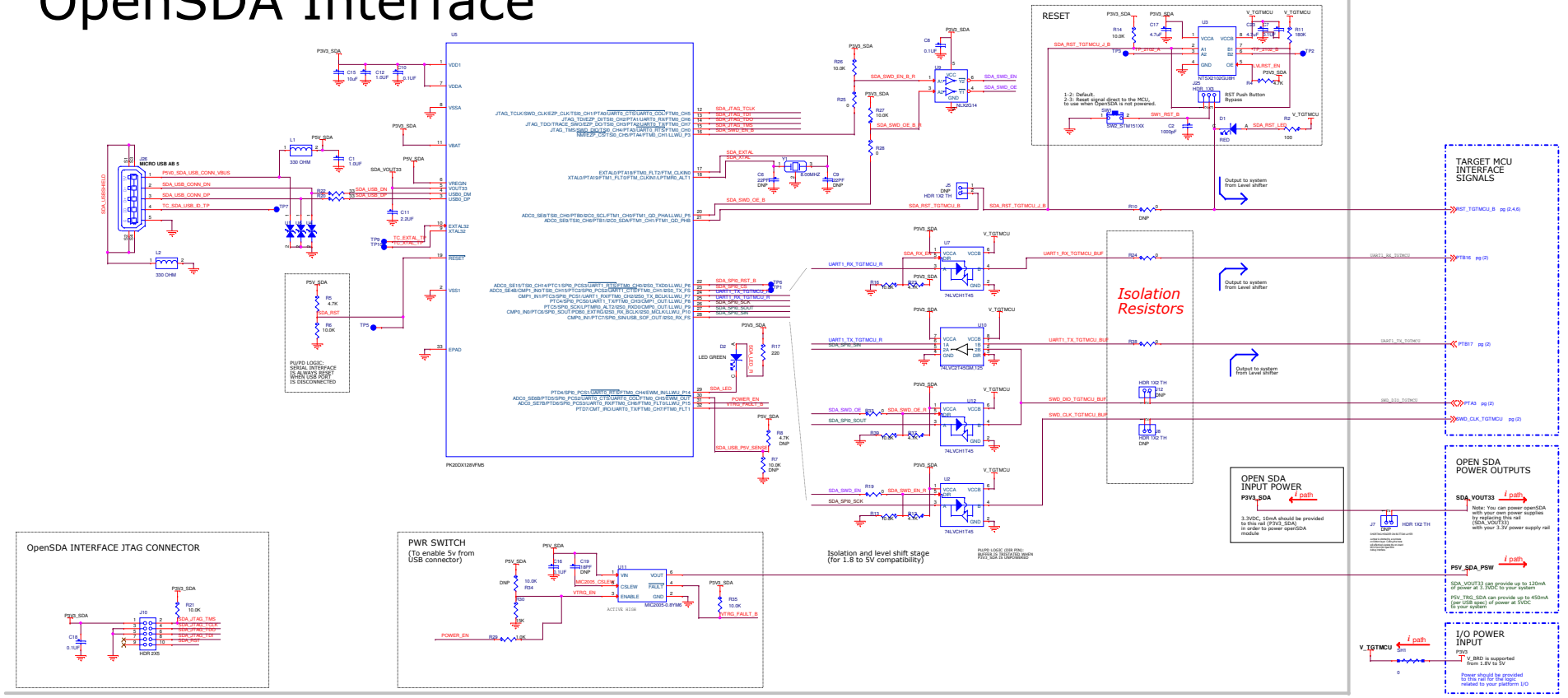

Drawing Title:	FRDM-K64F
Page Title:	Open SDA
Size: D	Document Number: SCH-28163 | PDF: SPF-28163
Rev: D	
Date: Wednesday, February 26, 2014	Sheet 3 of 6

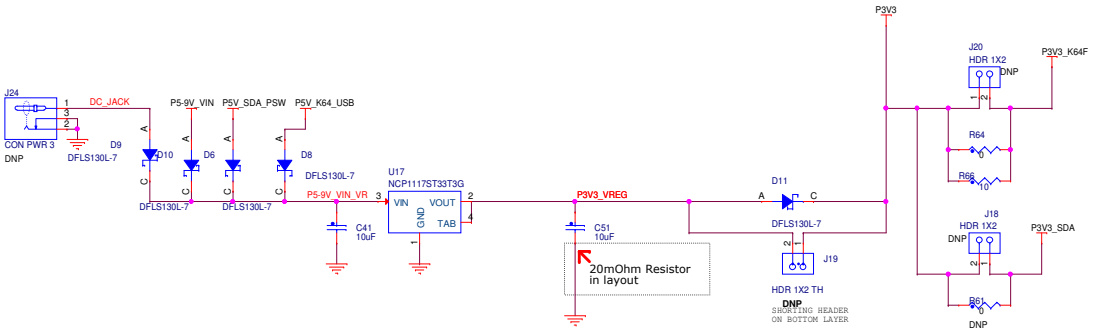

ARDUINO COMPATIBLE HEADERS

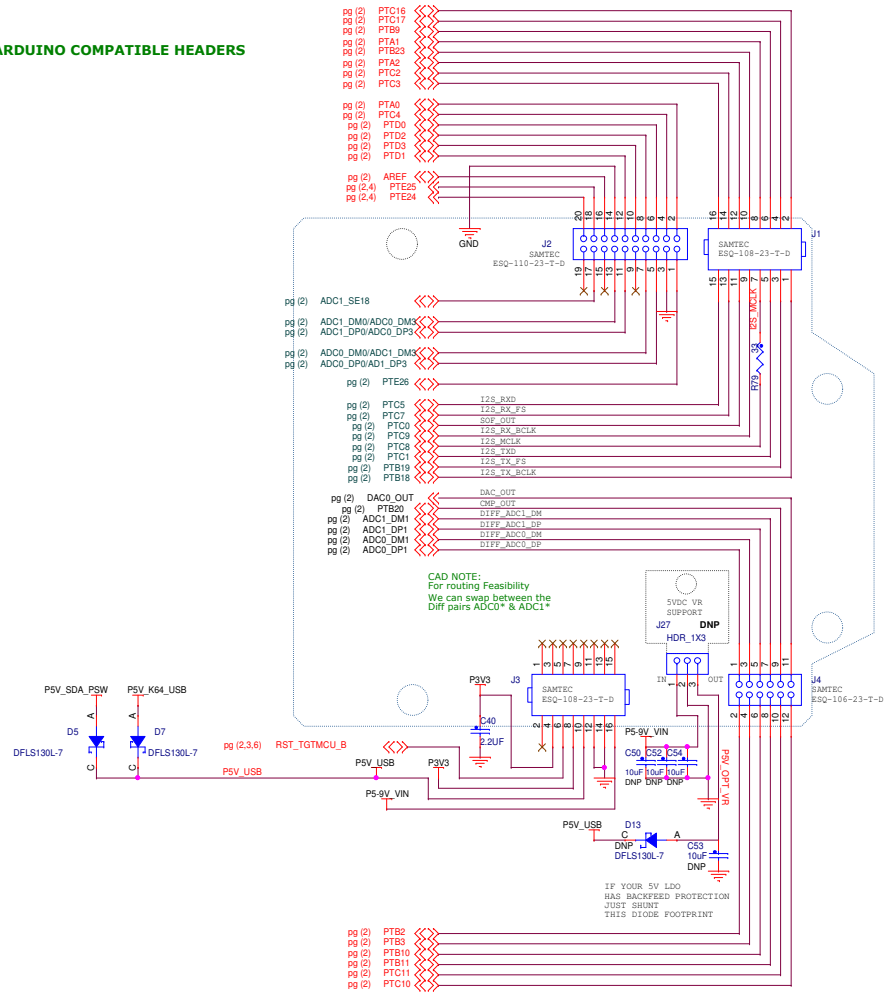

I2C INERTIAL SENSOR

(ACCELEROMETER AND MAGNETOMETER)

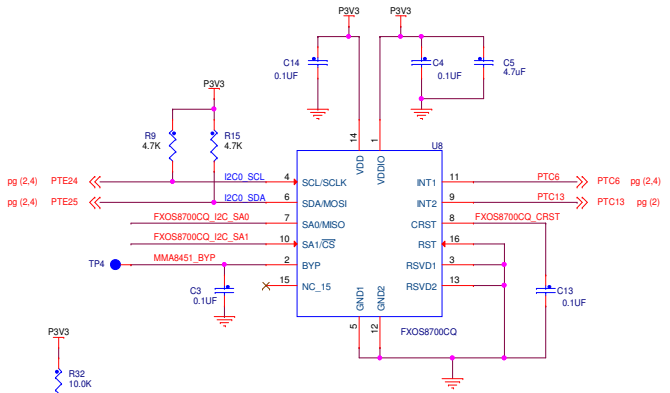

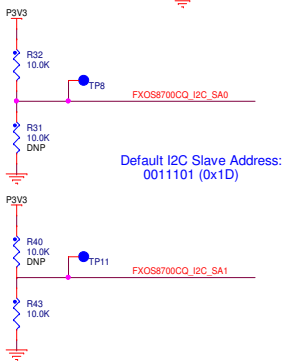

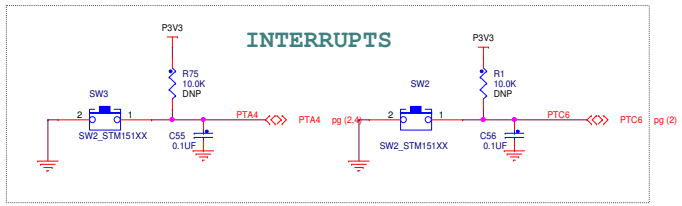

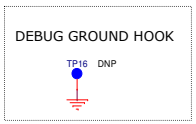

freescale

ICAP Classification:	FCP: ___	FIUO:	PUBI: X

Drawing Title: **FRDM-K64F**

Page Title: **ARDUINO SHIELDS & Accelerator**

Size	Document Number	Rev
C	SCH-28163 | PDF: SPF-28163	D

Date: Thursday, February 27, 2014 | Sheet 4 of 6

SD_CARD SECTION

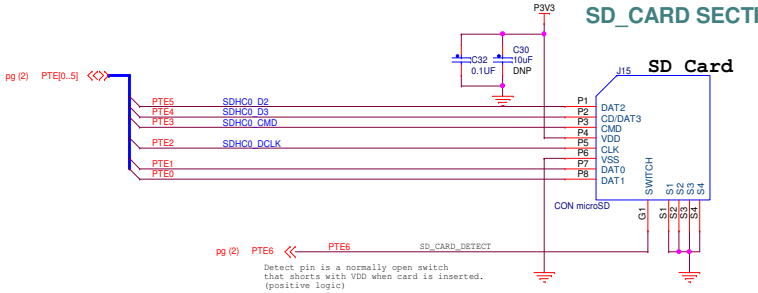

RF/WIFI

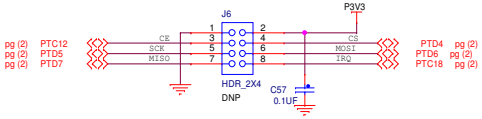

Add-on WIFI module: RF24L01+ - Nordic 2.4G Radio

Bluetooth

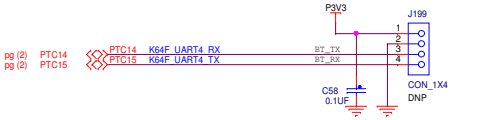

Add-on BT module: JY-MCU BT BOARD V1.05 BT

freescale

ICAP Classification: FCP: ___ FIUO: PUBI: X

Drawing Title: **FRDM-K64F**

Page Title: **PWR SUPPLY**

Size	Document Number	Rev
C	SCH-28163 | PDF: SPF-28163	D

Date: Thursday, February 27, 2014 Sheet 5 of 6

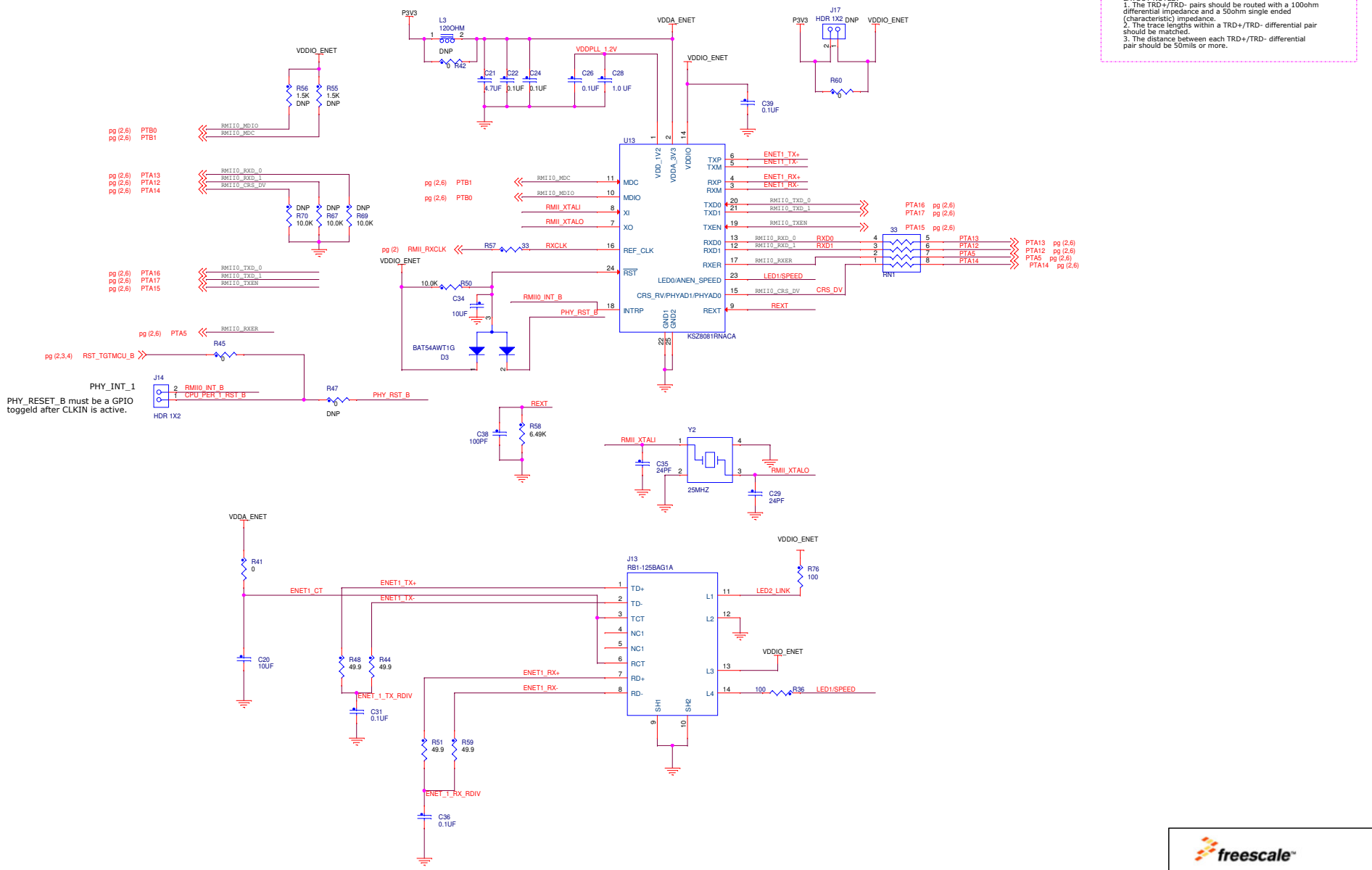
LAYOUT NOTES:
1. The TRD+/TRD- pairs should be routed with a 100ohm differential impedance and a 50ohm single ended (characteristic) impedance.
2. The trace lengths within a TRD+/TRD- differential pair should be matched.
3. The distance between each TRD+/TRD- differential pair should be 50mils or more.
PHY_INT_1
PHY_RESET_B must be a GPIO toggeld after CLKIN is active.
U13
KSZ8081RNACA
J13
RB1-125BAG1A
J14
HDR 1X2
J17
HDR 1X2
Y2
25MHZ
RN1
P3V3
VDDA_ENET
VDDIO_ENET
VDDPLL_1.2V
L3
120OHM
DNP
R42
C21
4.7UF
C22
0.1UF
C24
0.1UF
C26
0.1UF
C28
1.0 UF
C39
0.1UF
R60
R56
1.5K
DNP
R55
1.5K
DNP
RMII0_MDIO
RMII0_MDC
RMII0_RXD_0
RMII0_RXD_1
RMII0_CRS_DV
R70
10.0K
R67
10.0K
R69
10.0K
RMII0_TXD_0
RMII0_TXD_1
RMII0_TXEN
RMII0_RXER
R45
RST_TGTMCU_B
RMII0_INT_B
CPU_PER_1_RST_B
R47
PHY_RST_B
R57
33
RXCLK
R50
10.0K
C34
10UF
BAT54AWT1G
D3
REXT
R58
6.49K
C38
100PF
RMII_XTALI
RMII_XTALO
C35
24PF
C29
24PF
R41
0
C20
10UF
ENET1_CT
ENET1_TX+
ENET1_TX-
ENET1_RX+
ENET1_RX-
R48
49.9
R44
49.9
ENET1_1_TX_RDIV
C31
0.1UF
R51
49.9
R59
49.9
ENET1_1_RX_RDIV
C36
0.1UF
R76
100
LED2_LINK
R36
100
LED1/SPEED
ICAP Classification:
FCP:
FIUO:
PUBI: X
Drawing Title:
FRDM-K64F
Page Title:
RMII
Size
C
Document Number
SCH-28163 | PDF: SPF-28163
Rev
D
Date:
Wednesday, February 26, 2014
Sheet
6
of
6