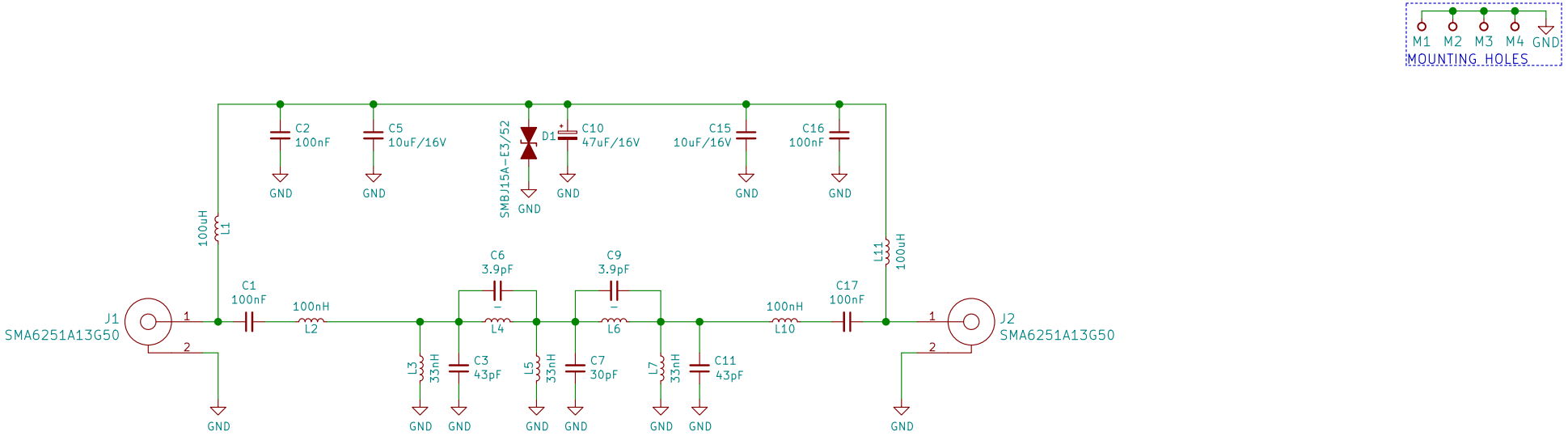

BSD

nickname <email@example.com>
Short description
Two lines are maximum
VERSION

Mlab www.mlab.cz

Sheet: /
File: BP01B.sch

Title: NAME

Size: A4	Date: %F	**Rev: REV**
KiCad E.D.A. kicad (2016-09-17 revision 679eef1)-makepkg		Id: 1/1