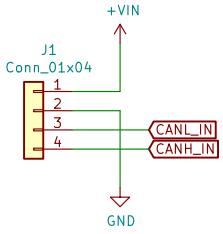

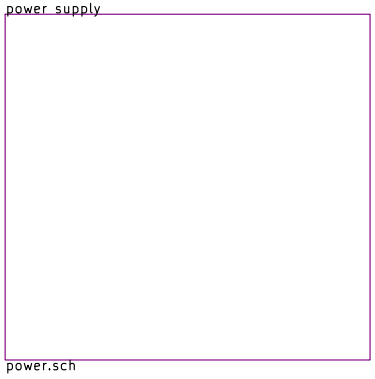

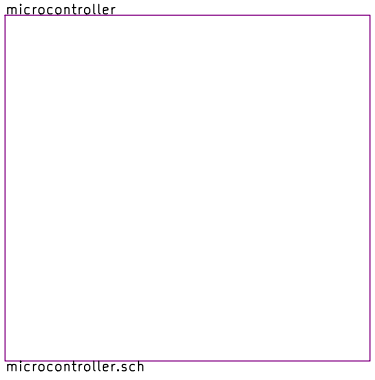

Josef Raschen

Sheet: /
File: hvac-sensor-module.sch

Title: VillaControl – HVAC Sensor Module

Size: A4	Date: 2019-01-05	**Rev: 1.0**
KiCad E.D.A. kicad 5.0.1-33cea8e67ubuntu18.04.1		Id: 1/3

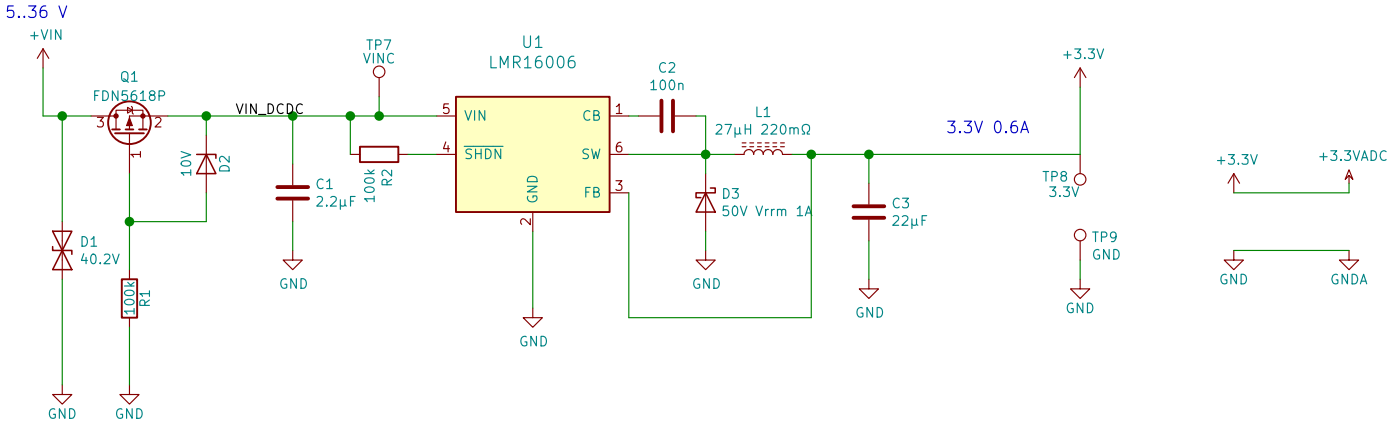

Josef Raschen

Sheet: /power supply/
File: power.sch

Title: VillaControl – HVAC Sensor Module

Size: A4	Date: 2019-01-05	**Rev: 1.0**
KiCad E.D.A. kicad 5.0.1-33cea8e67ubuntu18.04.1		Id: 2/3

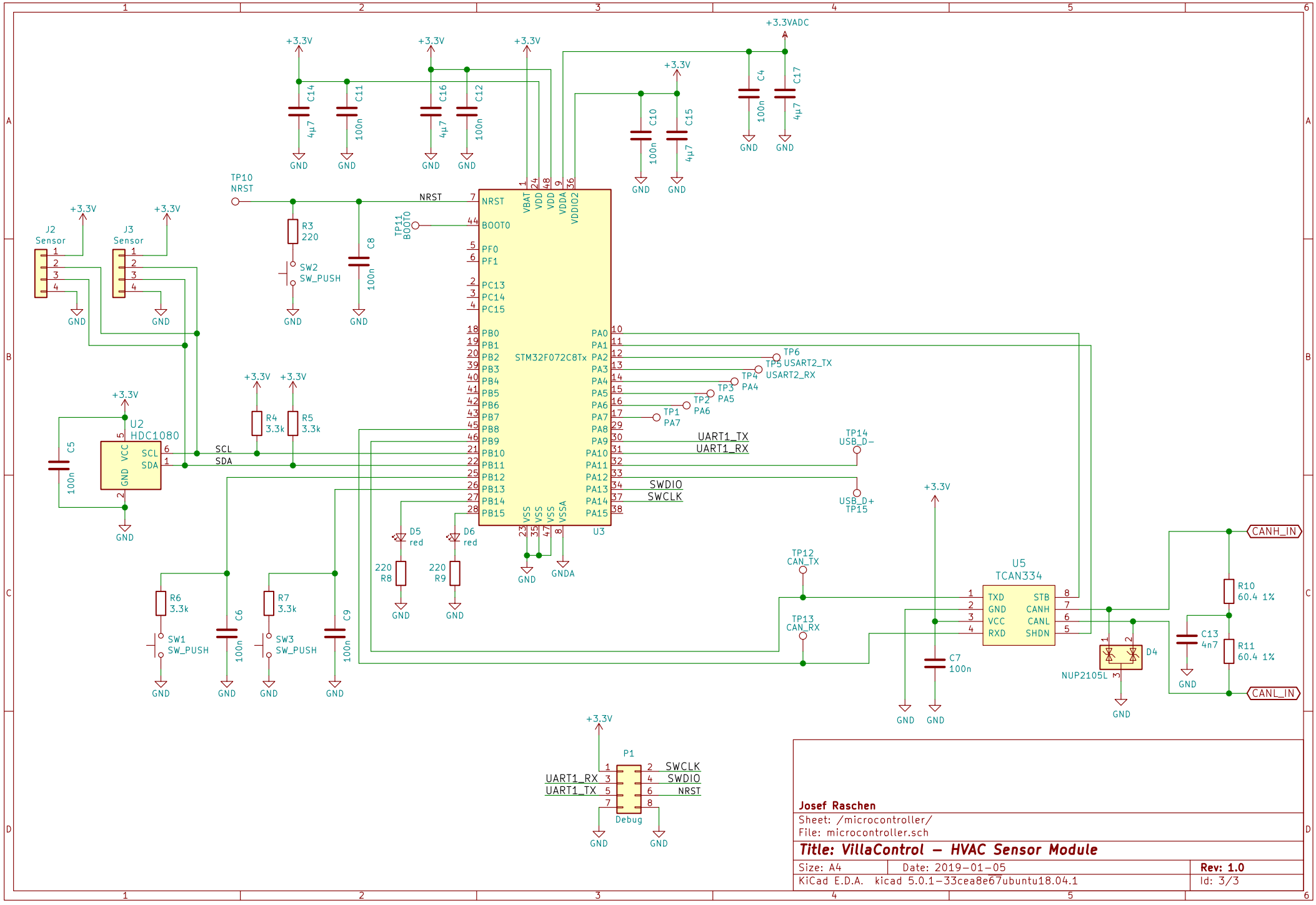

Josef Raschen

Sheet: /microcontroller/

File: microcontroller.sch

Title: VillaControl – HVAC Sensor Module

Size: A4	Date: 2019-01-05	Rev: 1.0
KiCad E.D.A. kicad 5.0.1-33cea8e67ubuntu18.04.1		Id: 3/3