Journal of Building Engineering 54 (2022) 104655

Contents lists available at ScienceDirect

Journal of Building Engineering

journal homepage: www.elsevier.com/locate/jobe

Review on heat pump coupled desiccant wheel dehumidification and air conditioning systems in buildings

Shaochen Tian [a,b], Xing Su [a,b,*], Yining Geng [a,b]

[a] School of Mechanical Engineering, Tongji University, Shanghai, 200092, China
[b] Key Laboratory of Performance Evolution and Control for Engineering Structures of Ministry of Education, Tongji University, Shanghai, 200092, China

ARTICLE INFO

Keywords:
Desiccant wheel
Heat pump
Dehumidification
Air conditioning
Review

ABSTRACT

Dehumidification and air conditioning are important for providing comfort environment and guarantee the industrial production. Hybrid heat pump and desiccant wheel system can achieve air conditioning and dehumidification with high evaporation temperature, and reduces energy consumption by recovering condensation energy for desiccant wheel regeneration. This paper aims to summarize the research about hybrid heat pump and desiccant wheel system, and to provide some potential research directions for improving the system performance and applicability. The development and configurations of the hybrid system is reviewed and categorised into conventional heat pump and desiccant wheel system, auxiliary heating for hybrid system, high temperature heat pump and desiccant wheel system, two-stage desiccant wheel system and new concept of hybrid system. It can be generalized that the study is mainly focused on providing different system combination methods, while the design of components, especially the desiccant wheel, is not meticulous enough. The operation and test conditions are different in studies, and there is lack of the comparison of different systems for providing the more suitable system configuration. For the second part of this paper, the application of the hybrid system in civil buildings for cooling and dehumidification, humidity control for industrial and production, air humidification and air cleaning are reviewed. It is found that the hybrid system is of multi-function, and has wide application scenarios for different requirement. The application of the system is seldom towards industrial production field, and the long-term operation is mainly researched through simulation method. Long term testing or experiment is highly recommended for improving the operation strategies.

1. Introduction

In industrial production and daily life, energy consumption and carbon emissions have increased sharply. It has been predicted that by 2040, the world primary energy consumption will grow to 5 times that of 1970, and the CO_2 emission will be 1.5 times that of 2017 (2200% than 1900) [1]. As one of the important air conditioning methods, dehumidification plays an important role, either for comfort air conditioning system to provide healthy and comfort living environment or for industrial humidity control to guarantee the production. High indoor relative humidity will lead to the growth of mould [2,3], the reproduction of mites [4,5], and the emission of volatile organic compound (VOC) [6], especially for regions featured hot and humid climate. In industrial production, such as lithium

* Corresponding author. School of Mechanical Engineering, Tongji University, Shanghai, China.
E-mail address: suxing@tongji.edu.cn (X. Su).

https://doi.org/10.1016/j.jobe.2022.104655
Received 9 March 2022; Received in revised form 19 April 2022; Accepted 10 May 2022
Available online 14 May 2022
2352-7102/© 2022 Elsevier Ltd. All rights reserved.

battery, spraying workshop, injection moulding workshop, semiconductor and pharmaceutical, low and extremely low humidity environment is required of the manufacturing technique. Dehumidification can be achieved by condensing water vapor on the evaporator of vapor compression systems based on vapor compression refrigerant cycle. The most commonly used equipment is room air conditioner, of which dehumidification and cooling are achieved by the same evaporator. Thus, indoor temperature and humidity cannot be controlled simultaneously, and indoor low temperature environment may be encountered for dehumidification control, especially for meteorological condition that features moderate temperature and high relative humidity. Reheating is one of the most commonly used methods to solve the problem, while additional energy will be consumed. On the other hand, condensation dehumidification is achieved by cooling the moist air below the required dew point temperature, extremely low evaporation temperature is required for low humidity industrial production. Vapor compression systems may not have the ability to cool the air to extremely low humidity, and low evaporation temperature will lead to high system energy consumption.

Compared with condensation dehumidification, dehumidification of desiccant wheels (DW) is by adsorbing water vapor rather than cooling the air to the required low temperature. It is widely recognized that moisture removal capacity (MRC) of DW increases under higher regeneration air temperature [7–9]. Since heating devices are necessary for regeneration air heating, the utilization of DW always requires auxiliary equipment. On the other hand, Affected by the adsorption heat, the heat storage during the regeneration process and heat transferred from regeneration air, the process air outlet temperature can reach 45 °C with 100 °C regeneration air temperature [8]. Cooling of the process air is always needed to meet the required supply air temperature, for controlling the temperature of the space. Except for material of DW, which affects the equilibrium adsorption capacity of DWs, DW structural and operational parameters largely affect the dehumidification performance of DWs, and affect the performance and energy consumption of the auxiliary equipment, consequently. It was found that the required regeneration temperature can be reduced by increasing the regeneration section area ratio, for achieving the same dehumidification rate [9,10]. DW material, thickness, rotational speed also have influence on dehumidification rate and energy exchange performance. Compared with conventional DW material (such as silica gel and zeolite), metal-organic frameworks (MOFs) has higher surface area and pores volume (Table 1), which can be potential material for DW dehumidification system. From this point of view, the selecting of DW material and the design of parameters, such as regeneration section area ratio and thickness, are of great important for the energy saving of the auxiliary equipment.

Hybrid DW dehumidification and air conditioning systems have been widely studied for several decades, and are classified into evaporative cooling and DW systems [13,14], solar energy regenerative DW systems [15–17], and heat pump DW systems [18–20] according to the equipment or systems combined with DW. Evaporative cooling is a low energy cost cooling method, and can be used for cooling the process air of the DW. Either directive evaporative cooling [14] or indirect evaporative cooling [21] can be used, while indirective cooling is more appropriate as dehumidification is not offset by the evaporative humidification process. Though the evaporative cooling has high energy saving potential for cooling, the energy consumption for heating the DW is high when no waste heat or renewable energy can be utilized, and the evaporative cooling process does not have the ability to cool the process air to a much lower temperature, for most of the climate zones. To solve the heating problems for DW regeneration air, solar energy is one of the solving methods for maintain the energy efficiency of the DW system. Ge et al. [22] have reviewed the solar regenerative DW systems, and found that this kind of systems can obtain high energy saving for several representative cities. While influenced by the availability and uncertainty of the solar energy, the system performance varies greatly with respect to different operation conditions. Compared with evaporative cooling, the heat pump (or chiller) can provide cooling energy with much lower temperature, and water for evaporation is not required. On the other hand, heat can be generated during vapor compression cycle, and can be adopted for heating the regeneration air of DW. By combining heat pump with DW, supply air temperature can be well controlled with stable regeneration air heating energy.

The above literature review indicates that heat pump combined DW systems have the ability in controlling temperature and humidity of the space with high energy saving potential. To this end, the objective of this review paper is to present the research status of the hybrid heat pump and desiccant wheel system, and then propose the possible research for improving the performance of the hybrid system and making the system more applicable. Firstly, the most commonly used performance indicators of the hybrid system are concluded. Secondly, the development of hybrid HPDW system with different coupling methods is discussed, including conventional HPDW system, solar energy HPDW system, high temperature heat pump combined DW system, heat pump combined two-stage DW system, and new concept HPDW system. Thirdly, the application of the hybrid HPDW system in civil buildings, industrial field, water harvesting and air cleaning are concluded. Based on the literature review of the present references, the application of HPDW system and the following research is discussed.

Table 1
Physical properties comparison of adsorbent materials.

Material	BET surface area (m^2/g)	Pores volume (m^3/kg)	Adsorption capacity (kg/kg)	Ref.
Silica gel 2560	636.4	3.27×10^{-4}	0.32	[11]
Silica gel RD	838	4.00×10^{-4}	0.3	[11]
Fuji silica gel RD	780	4.40×10^{-4}	0.48	[11]
AQSOA-Z05	187.1	0.70×10^{-4}	0.22	[11]
Zeolite	643	3.10×10^{-4}	0.25	[11]
MIL-101-Cr	4000, 2789	1.51×10^{-3}	N/A	[12]
MIL-101(Cr) @GO-2	3472	1.69×10^{-3}	N/A	[12]
MOF-808	2060	8.40×10^{-4}	N/A	[12]
MIL-100-Fe	1917	1.00×10^{-3}	N/A	[12]

2. HPDW dehumidification and cooling system

2.1. Technical parameters and simulation model

2.1.1. Technical parameters

For system performance indicators, the most commonly used is coefficient performance (COP) of the system and the total dehumidification capacity of the system [14,23,24].

$$COP = \frac{Q}{W}$$

where Q can be used for representing the cooling capacity of the system. The definition of COP in literatures is different, due to the difference of consideration for the energy consumption components, mainly including only considering the compressor [25–28], heat input for DW regeneration (thermal COP) [14,24,29,30], compressor and heaters [31], system energy consumption except for the heaters [32], and considering the whole energy consumption for all components [23,25,30,33–35].

When dehumidification performance of the hybrid system is the taken into consideration, especially for conditions with high dehumidification requirement than cooling, energy factor (E.F.) can exhibit the dehumidification coefficient of performance, which is defined as [19]:

$$E.F. = \frac{M}{W}$$

where M represents the total dehumidification capacity of the system.

Exergy analysis can be adopted for system performance analyzation, and the exergy efficiency is used by researchers for analyzation [27,36]. For hybrid system that solar energy is used for heating the regeneration air of DW, solar fraction is used for expressing the ratio of solar energy and total energy for DW regeneration air heating [30,33,37–39], which can also be expressed as compensation ratio [34].

2.1.2. Simulation model

Simulation is an effective and low-cost method for studying the system performance. The simulation model in literatures can be classified into two categories, physical model of heat and mass transfer and empirical model based on experimental data. The DW physical model of heat and mass transfer is established on the basis of the energy balance and mass balance of adsorbent side and air side, and the heat pump physical model of heat and mass transfer includes evaporator, condenser, compressor and expansion valve. The empirical model for DW is based on the empirical formula from experimental data, and for heat pump is through the performance cure (typical software TRNSYS). The utilization of the two types of simulation methods is summarized in Table 2.

2.2. Coupling method development of HPDW system

2.2.1. Development of conventional HP combined DW system

Influenced by the adsorption heat and heat transferred from regeneration process, the dehumidification process of DW is approximate isoenthalpy process, causing the rising of process air temperature. Thus, after the DW dehumidification, the dry and hot process air needs to be cooled to the supply air temperature set point, before supplying into the conditioned space, to meet the indoor temperature and humidity requirement. From this point of view, the most basic combination method of HPDW system is utilizing evaporator of heat pump to cool the supply air, the schematic figure of the system is shown in Fig. 1.

In this kind of system, the process air of the DW can be the outdoor fresh air, indoor return air or the air mixed by indoor and outdoor air on the basis of different fresh air rate requirement. Similarly, either indoor exhaust air or outdoor fresh air can be the potential source of DW regeneration air. The regeneration air of the DW in this system should be heated by a heater, of which the energy can be electricity, hot water, steam and etc.

For saving energy of both heat pump and the heater, Liu et al. [18] and Jani et al. [31,35,46,49] adopted a heat recovery wheel between DW and evaporator, to achieve the heat exchange between the dehumidified process air and the regeneration air before entering the regeneration section of DW. Generally, the heat recovery wheel can also be changed into a heat exchanger. The schematic

Table 2
HPDW system simulation model.

Simulation model	References	Characteristic
Heat and mass transfer model	[24,28,29,40–42]	Advantage: High calculation accuracy Disadvantage: Solution complex Long calculation time Applicability: Single or several operation conditions (single point)
Empirical model	[21,31,39,43–48]	Advantage: Simple Short calculation time Disadvantage: Calculation accuracy Specific component and structure A large amount of e experimental data is required Applicability: Single point and consecutive operation for long period

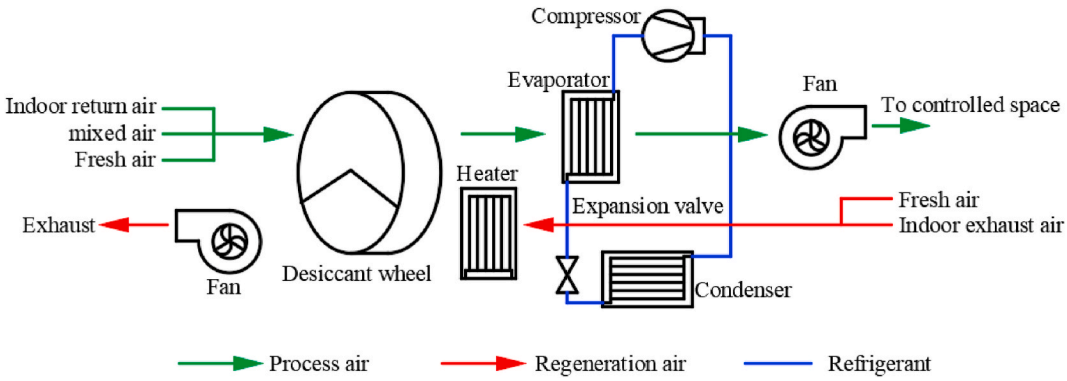

Fig. 1. Schematic figure of the basic hybrid HPDW system.

figure of the system is shown in Fig. 2.

For the system proposed by Jani et al. [31,35,46,49], the process air, namely the supply air, is totally indoor return air, and the regeneration air is formed with outdoor ambient air. Both experimental [35,46,49] and simulation methods for long term operation (cooling and dehumidification season) [31,35] were adopted for system performance analysis towards hot and humid climate zone. The effect of outdoor air humidity and temperature, as well as regeneration temperature on the system COP was evaluated [31], and the variation of dehumidification efficiency [35] and MRC [46] of DW on outdoor temperature was discussed. More than 60% of the moisture can be removed from outdoor air with the system.

By changing the process air from indoor return air to outdoor fresh air and adding another chiller for handling parts of indoor sensible load, a dedicated outdoor air HPDW system was studied by Liu et al. [18]. The energy consumption model is established for comparison with dedicated outdoor air system without DW. The effect of air flowrate, air temperature and humidity ratio on system COP were evaluated, and the process air to regeneration air flowrate ratio was optimized based on system energy consumption. Affected by the high regeneration energy requirement, there was limit or no energy saving potential of the dedicated outdoor air HPDW system, compared with the conventional one.

The aforementioned system requires additional energy for heating the regeneration air of DW, causing a low system COP and high energy consumption. By recovering the condensation heat dissipated from the heat pump to heat the regeneration air of DW, a developed HPDW system is shown in Fig. 3.

Depends on the relative position of the evaporator and DW, the system can be divided into cooling-desiccant HPDW system and desiccant-cooling HPDW system. The process air of the cooling-desiccant HPDW system is cooled, sometimes dehumidified, by evaporator before entering the DW, and the DW is for deep dehumidification. For the desiccant-cooling HPDW system, the process air is only dehumidified by the DW, and then passes through the evaporator to be cooled to the required supply air temperature. The air handling process of the two systems sketched in Fig. 4.

Obviously, the main purpose of the cooling-desiccant HPDW system is to improve the DW dehumidification performance, as the reducing of DW process air inlet temperature leads to a rising of MRC. While, the main drawback of the system is that the rising of process air outlet temperature cannot meet the supply air temperature requirement for most of the conditions. By adopting the desiccant-cooling HPDW system, the supply air temperature can be controlled. However, the DW dehumidification performance is restricted by the high process air inlet temperature.

Some scholars have compared the performance of the two systems, by taking system power consumption and energy factor (the ratio of dehumidification amount and power consumption) into consideration [19,50]. Chen et al. [19] found that when the process air

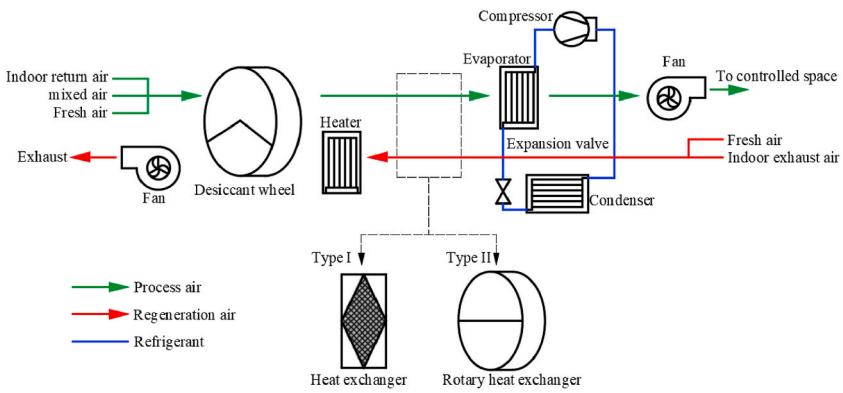

Fig. 2. Schematic figure of the hybrid HPDW system with heat exchanger.

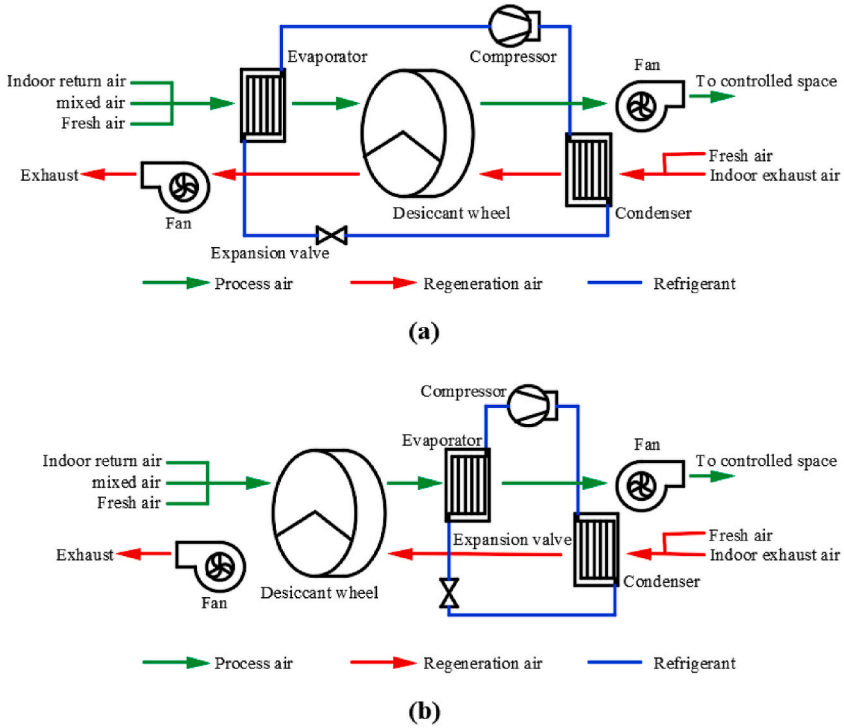

Fig. 3. Cooling-desiccant HPDW system (a) and desiccant-cooling HPDW system (b).

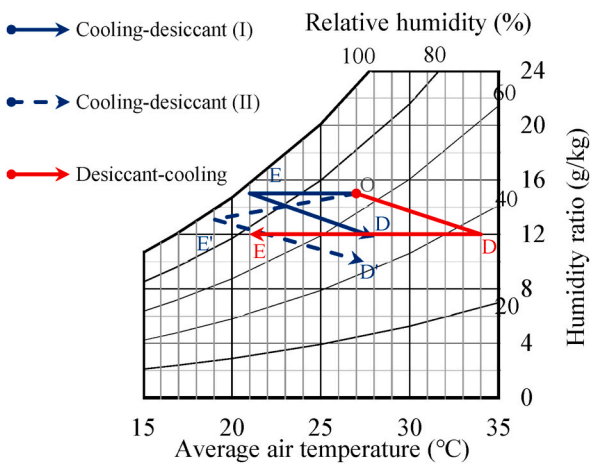

Fig. 4. Air handling process of cooling-desiccant HPDW system and desiccant-cooling HPDW system.

was dehumidified from 18 g/kg to 11 g/kg, cooling-desiccant (II) HPDW system (3.8 g/kg humidity ratio is removed by the evaporator) has higher performance than desiccant-cooling HPDW system, due to the low power consumption and high energy factor. By taking DCOP of DW as an index, Liu et al. [50] has the same conclusion when simulated the two systems under Shanghai and Singapore weather conditions, and the DCOP of DW for the cooling-desiccant (II) HPDW system is higher than that of the desiccant-cooling HPDW system. Without evaporator removing parts of the moisture load, desiccant-cooling HPDW system is difficult to meet the dehumidification requirement, due to the low moisture removal amount of the whole system.

Martinez et al. [48] established a TRNSYS simulation model of the cooling-desiccant (I) HPDW DOAS system, and validated it with experimental testing data. Then, long term operation (August 15–31) analyzation of the cooling-desiccant (II) HPDW DOAS system and a solar energy regenerating DW DOAS system (indirect evaporative cooling is used for DW post cooling) were conducted. Without pre-cooling and pre-dehumidification of DW, the solar energy regenerating DW DOAS system requires more heating energy for DW regeneration, and the cooling-desiccant (II) HPDW DOAS system is more suitable for residential buildings, due to the non-availability of solar energy during night time.

Yang et al. [51] adopted a HPDW system for drying material, and the schematic figure is shown in Fig. 5. The moist air from the drying chamber is cooled and dehumidified by the evaporator, dehumidified by the DW and heated by the condenser continuously, and then used as the dry air. The moisture extraction rate can reach 1.0 kg/h, much higher than the conventional drying method. The dry air temperature at the outlet of the condenser can reach 52 °C.The main drawback of the hybrid DW system is that the specific moisture extraction rate is largely restricted by the high energy consumption for DW regeneration when no waste heat can be utilized.

By using indoor return air as the process air and outdoor air as the regeneration air, Ge et al. [52] inserted a heat exchanger in the desiccant-cooling system (See Fig. 6), and the system is for dealing with indoor latent load. Analysed with exergy method, indoor and outdoor air humidity ratio difference is the most influential factor of desiccant wheel dehumidification rate, and the exergy efficiency of HPDW system increases with rising outdoor temperature; however, the required power for the desiccant wheel dehumidification will decrease.

Apparently, cooling-desiccant (II) HPDW system has higher dehumidification capacity with low energy consumption, compared with desiccant-cooling HPDW system. However, the high process air outlet temperature cannot meet the sensible load removing requirement of the controlled space. Though one additional vapor compression system with a cooling-desiccant (II) HPDW DOAS system can solve the problem, it is not fit for residential buildings, due to the large bulk volume and high investment. Ge et al. [20] proposed a HPDW system featured two-evaporator and two-condenser, the basic configuration of which is shown in Fig. 7.

The reason for inserting a condenser, in series, to heat the regeneration air is that the heat recovery temperature is higher than that of one condenser [53], and outdoor air passes through another condenser for removing the excessive condensation heat. Two parallel evaporators are involved in the system, one for pre-cooling and pre-dehumidification of the process air and another for cooling the indoor air. In the system proposed by Ge et al. [20], radiant panel is used for handling indoor sensible heat load, and water is adopted as the cooling medium between the evaporator and radiant panel. Compared with conventional system of residential buildings in hot summer and cold winter climate zones, 37%, 50% and 14% of the primary energy can be saved for cooling with dehumidification mode, dehumidification mode and heating mode, respectively. By adding one more condenser for hot water producing, a concept of HPDW and hot water supply system is given by Nagano et al. [54].

Exergy analysing method is an effective way to study the configuration of the HPDW system, and has been adopted by Tu et al. [36]. The main exergy destruction appears at the heating source with high exergy destruction and over-dehumidification, and pre-cooling is advised for improving the exergy efficiency.

It is easy to be generalized, the energy saving of the HPDW system is mainly due to the deep dehumidification of DW, which can effectively increase the evaporation temperature of heat pump. For systems discussed above, evaporator still has to deal with part of the moisture load to meet the dehumidification requirement for most of the application filed. The reason is that only heated by the condenser of heat pump, the regeneration air temperature cannot support efficient MRC of DW.

2.2.2. Auxiliary heating method for HPDW system

It can be generalized that when combining DW with conventional heat pump, heating the regeneration air further to meet the dehumidification requirement is necessary, especially for high dehumidification requirement conditions. Inserting auxiliary heaters is the most common way to further heat the regeneration air. The simplest auxiliary heating method is inserting electric heater to further heat the regeneration air in front of regeneration section of DW. According to the fresh air dehumidification HPDW system proposed by Yong et al. [32], an IEC is used for cooling the hot and dry air after DW dehumidification, and outdoor air is heated by condenser and electric heater, successively (See Fig. 8). The basic schematic figure of the HPDW heater system is shown in Fig. 6. Three operation modes of the system were achieved by turning off parts of the components, based on the evaluation for the effect of regeneration air temperature, ambient air temperature and humidity ratio on system performance.

By changing the process air from fresh air into indoor return air and converting the IEC into an inter-cooler, Subiantoro [44] simulated the performance of the HPDW heater system of same configuration with reference [32]. It was found that increasing condensing temperature to improve dehumidifiers' performance did not result in net energy saving of the whole system.

Since excess energy is required by the auxiliary heater, especially when there is no waste heat can be utilized, the system is of low energy saving potential. By using renewable energy instead of using electric heat, more energy can be saved by the HPDW heater

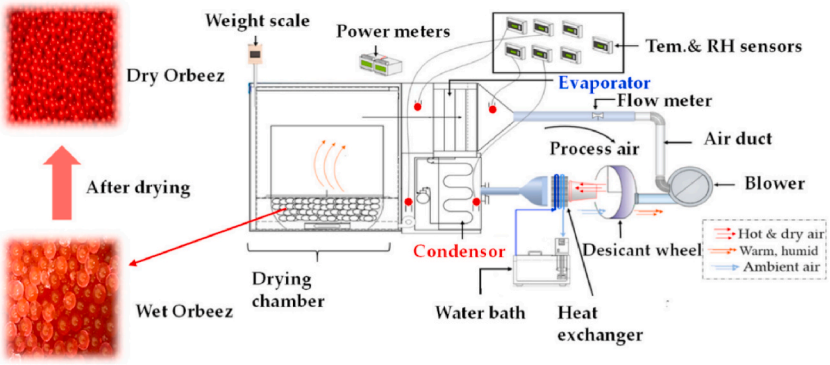

Fig. 5. HPDW system for drying material [51].

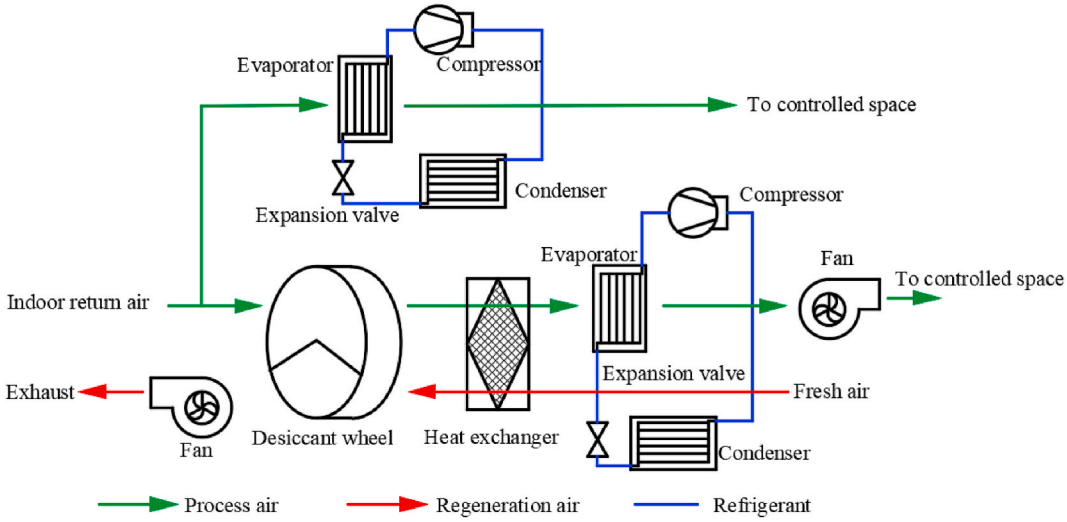

Fig. 6. Hybrid system featured two-heat pump system and one desiccant wheel [52].

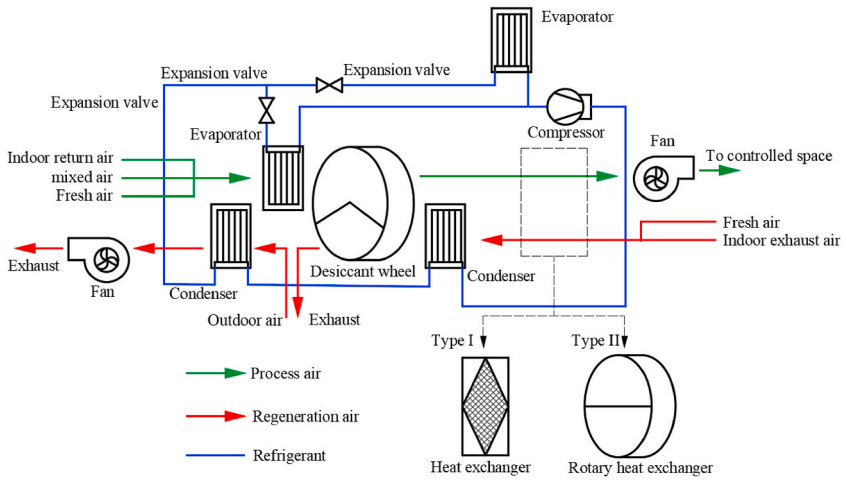

Fig. 7. Two-evaporator and two-condenser HPDW system [20].

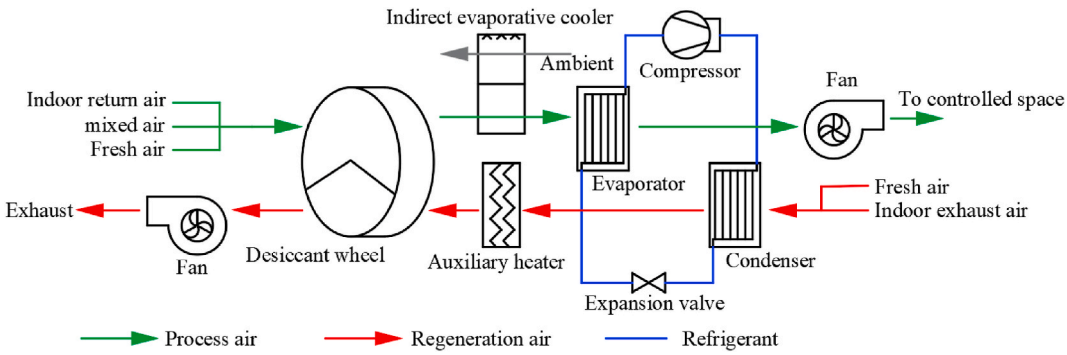

Fig. 8. HPDW system with auxiliary heater [32].

system.

Solar thermal system, of high temperature and low energy consumption, has been widely adopted in HPDW system for regeneration air further heating. Similar to the basic HPDW system, a solar powered HPDW system, by using evaporator for DW post cooling and

solar energy for regeneration air heating (the medium is water for both cooling and heating process), is feasible for regions that humidity is not too high [55,56]. When adopted in commercial buildings with high latent load, the system is more effective as 49.5% of the primary energy consumption of the solar powered HPDW system can be saved compared with conventional system [39]. Simulation and experimental study was conducted on a solar powered HPDW system with electric heater for further heating by Hurdogan et al. [34]. The application of solar energy can improve the system COP by 50%–120%. A solar powered two-stage DW system with intercooling (achieved by cooling tower directly) was combined with heat pump system, and analysed experimentally and theoretically [30]. The air dehumidified by the solar powered two-stage DW system is mixed with the air cooled by heat pump system, and then supplied to the room. 35.7% of the total cooling load was achieved by the solar powered two-stage DW system, and system COP can reach 11.48. Combined with indoor radiant floor, a solar powered HPDW DOAS system, of which evaporator is used for cooling the DW post-cooling water, has been studied [57]. The control strategy of the system was studied towards 10 operation modes by using TRNSYS software, and the 35% of the energy can be saved compared with conventional system, humid climate in Spain.

By cooling the air directly, a HPDW system combined with solar energy and evaporative cooling have been simulated [37] and experimentally studied [58] by Baniyounes et al. For the system, condensation heat was not used for heating the regeneration air. Though 18% of the energy was saved, the system COP is only 0.83.

In the solar energy HPDW system proposed by Beccali et al. [38], cold water is adopted for both post-cooling of process air and indoor radiant ceiling, and both condensation heat and solar hot water are used for DW regenerating (Shown in Fig. 9). Before indoor exhaust air enters the heat exchanger, a humidifier is adopted for improving the heat exchange rate. For winter, solar hot water is adopted for fresh air and indoor radiant ceiling heating. During long term field test, seasonal primary energy consumption, electric and thermal COP are analysed, and the energy savings can reach 50% compared with conventional system.

A combined solar energy, evaporative cooling and HPDW system (See Fig. 10) was studied by Frein et al. [33]. With 4 main operation modes, namely cooling mode, dehumidification mode, heating mode and safety mode, the performance of the system was studied for two-year operation, see Fig. 6. The proposed system has half primary energy ratio of a conventional heat pump, boiler heating and heat exchanger system, while affected by the underperformance of DW, the system energy performance is only 80% of the expected value.

Beccali et al. compared solar energy and HPDW system of three configurations by using solar energy to heat regeneration air directly, standard type (chiller as back-up system), additional heat exchanger type (additional enthalpy recovery) and integrated heat pump type (evaporator for process air post-cooling and condenser for regeneration air preheating) [45]. The solar energy is directly used for heating the regeneration air of DW without heat exchange with water and the system configuration is shown in Fig. 11. Two heating modes, three cooling and dehumidification modes and ventilation mode have been proposed. It was found that the integrated heat pump type has lower primary energy consumption.

Fong et al. [29] compared 6 types of solar energy desiccant cooling systems through year-round performance, including full fresh air handling system and fresh air and return air handling system. Up to 35.2% of the energy can be saved by adopting photovoltaic assisted water-cooled vapor compression chiller DW system for space cooling of a typical office building with 200 m^2 in Hong Kong, compared with vapor compression system. The aforementioned system configuration has the lowest primary energy consumption among the 6 types of proposed systems, while the configuration of absorption chiller with evacuated tubes has high economic performance in life-cycle cost.

Liu et al. [24] proposed a photovoltaic (for providing electric power of HPDW system) and solar thermal collector (for further heating of the DW regeneration air) assisted HPDW system. And economic analyzation has been conducted on an office building of 100 m^2 in low latitude isolated island. High condensation temperature (50 °C–60 °C) contributes to the DW regeneration, while low condensation temperature (30 °C–40 °C) is suggested for reducing the initial investment. On the other hand, solar thermal collector of medium temperature type is required for DW regeneration, which may lead to high initial investment.

2.2.3. High temperature HP combined DW system

Obviously, neither auxiliary heating method nor solar energy HPDW system is suitable for civil buildings due to the high energy

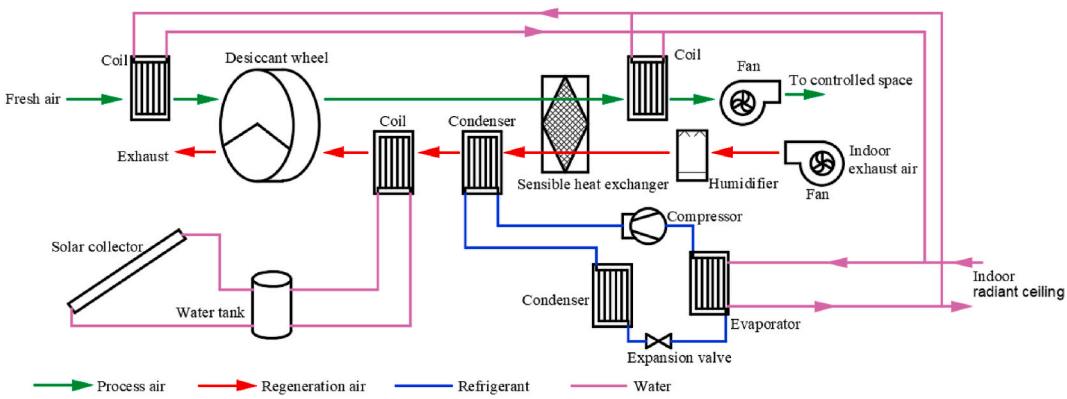

Fig. 9. Solar energy hot water and HPDW system [38].

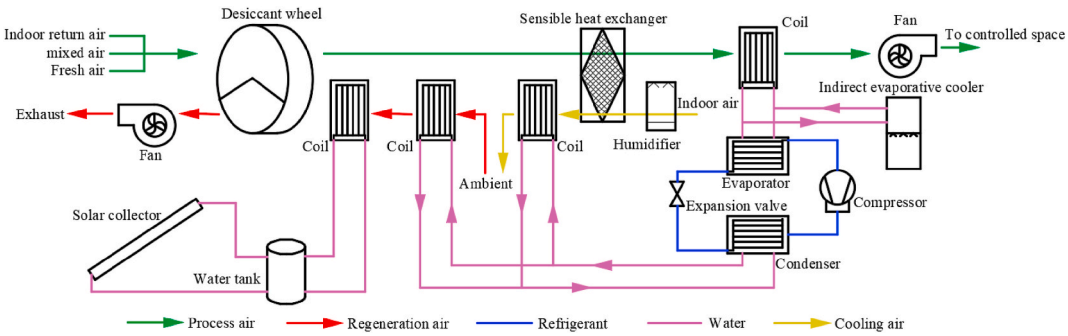

Fig. 10. Solar energy, evaporative cooling and HPDW system [33].

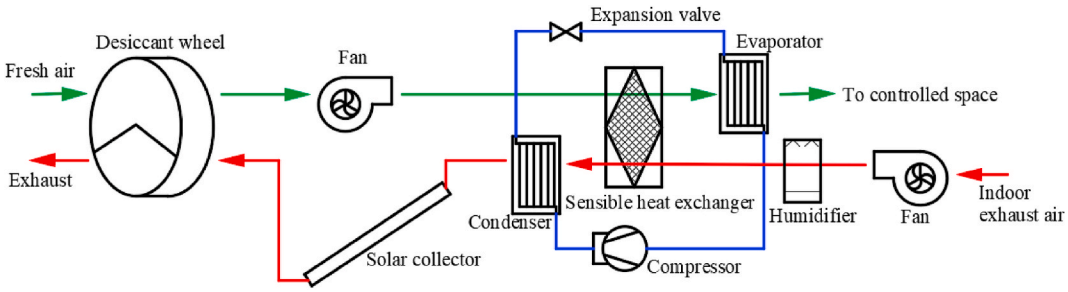

Fig. 11. Solar energy, evaporative cooling and HPDW system [45].

consumption and complex system configuration, separately. To achieve high dehumidification rate of DW, cascade heat pump and high temperature heat pump can effectively increase the regeneration air temperature after recovering the condensation heat, due to the high condensation temperature.

By using moderate and high temperature heat pump for regenerating DW, and post-cooling the process air, the regeneration air temperature can be heated to 69.5 °C [59]. Though the high compression ratio is increased to meet the high condensation temperature requirement, which causes a reduction of compressor COP, more than 30% of the energy consumption of the system can be reduced compared with CAC. By changing the refrigerant to R142b, Zhang et al. [60] found the regeneration temperature can be heated to 79.2 °C with inlet air temperature of evaporator of 45 °C (after heated by DW process section zone).

Sheng et al. [25] adopted mixture refrigerant BY-3 in high temperature heat pump, and combined with DW to form a desiccant-cooling hybrid system. The mixed air of fresh air and indoor return air is dehumidified by DW and cooled by evaporator, and outdoor air is heated by condenser and compressor to regenerate DW. The regeneration air can be heated to 74 °C. System energy consumption, COP of system and heat pump were adopted as indicators for performance analyzation. The optimization was conducted towards air flowrate of process air and regeneration air, while the structure of DW were not conducted. Compared with conventional air conditioner and conventional HPDW system with the same combination method under AHRI summer condition, 45.6% and 30.5% of the energy can be saved compared with conventional air conditioner and conventional HPDW system, respectively [40]. Then, Sheng et al. [61] evaluated DW performance by operating in the hybrid system, and established a DW performance predicting model based on multiple linear regression theory. However, the model is only towards process air and regeneration air conditions rather than DW structural parameters. The model may be helpful for future work on DW structural parameters.

Sheng et al. [62] conducted thermal dynamic analysis on the high temperature heat pump DW system with exergy. It was found that 81.9% of the total exergy destruction is accounted by high temperature heat pump. By proposing two improved configurations, namely HTHP with DW and heat exchanger and HTHP with two-stage DW with heat exchangers, 25.5% and 30.3% of the exergy input can be reduced by the two systems, respectively.

The system COP is largely restricted by the COP of high temperature heat pump, due to the high-pressure ratio of evaporation pressure and condensation pressure. On the other hand, though increasing the regeneration temperature of DW can improve the system dehumidification rate, the high regeneration temperature will cause a low DW dehumidification efficiency [7], low adiabatic effectiveness [26] and high process air outlet temperature [8,9], which requires more energy to cool the process air down to meet the supply air temperature requirement.

Liu et al. [63] adopted a HTHPDW system and radiation cooling system in high-temperature and high-humidity region, to solve the condensation problem of radiation cooling panel. Surface cooling with cold water is achieved before fresh air enters the DW, and the regeneration air can be heated to 74.3 °C with high condensation temperature. In the conference room of 20.5 m^2, the system can meet the dehumidification requirement, and the condensation of radiant panel can be solved with 26 °C and 45% indoor condition.

Liu et al. [47] proposed a CO_2 heat pump DW system with closed regeneration air loop, the schematic figure is shown in Fig. 12. One

additional evaporator is applied for regeneration air dehumidification and a sub-cooler is installed in the front of heat recovery condenser for preheating the regeneration air as well as sub cool the refrigerant. By comparing the system with HPDW system, it was found that the proposed system can save 35%–84% energy than conventional systems and advanced high temperature heat pump systems.

Lo Basso et al. [64] combined DW with *trans*-critical CO_2 heat pump and the main difference with previous HTHPDW system is that photovoltaic is used for the electric energy source of HP, and the system is adopted in a conference hall. The detailed information of DW was not mentioned. Dynamic simulation has been considered as the best solution for system sizing. By optimizing control strategy, significant energy consumption can be achieved.

Song et al. [65] combined DW with a cascade heat pump (See Fig. 13), and the regeneration air can be heated to 70 °C with condensation temperature of the second-stage heat pump of 75 °C. The COP of each stage heat pump was calculated as 5.65 and 5.41, and the calculated system COP (only power of compressors was considered) is 5.56.

2.2.4. HP combined two-stage DW system

Hybrid two-stage DW dehumidification and air conditioning system has the ability for reducing the regeneration air temperature requirement [14,15,66]. Thus, it is an effective method for the combination of heat pump and DW, due to the low regeneration temperature requirement.

For heat pump driven multi-stage DW systems, the air handling process of process air and regeneration air is closer to the iso-relative humidity line (See Fig. 14), as the temperature drop of the processed air after each evaporator diminishes, and the temperature rises after each desiccant dehumidification stage [27]. A huge amount of study has been done by Liu et al. [67] and Tu et al. [42] towards heat pump-driven two-stage DW systems. The schematic figure of the proposed system is shown in Fig. 15. Based on the system model, the COP of the system can reach 5.5 under Beijing summer condition with the required supply air humidity ratio of 10 g/kg, and the COP can reach 6.3 by changing the post cooling evaporator into an indirect evaporative cooler [42].

By adopting heat pump combined two-stage DW system in an office building (66,400 m^2 in 11 floors) in Guangzhou and Beijing, the energy performance of the system is analysed by Tu et al. [68]. The hybrid system is for dealing with the sensible and latent load of the fresh air and parts of indoor sensible load, and an additional high evaporating temperature chiller is for handling the rest of the indoor sensible load. With hourly load calculation results, the annual energy saving by adopting the hybrid system can reach 36.0% for Beijing and 16.5% for Guangzhou, respectively.

Hybrid DW system can not only be adopted in comfort air conditioning system for improving dehumidification performance, but also be adopted in industrial buildings that require low and extremely low humidity environment, e.g., the production of lithium battery [69]. Single-stage DW system is always adopted for the space with relative humidity requirement lower than 45%, while with humidity requirement that dew point temperature lower than −30 °C, two-stage DW system should be used [70].

Chen et al. [41] compared a cascading DW system with a heat pump by dehumidifying the air from −12.5 °C (RH = 78%) to −30 °C. Similar to the cascade HP, the two DWs in the proposed system in cascade form: the high temperature DW is used for providing regeneration air for the low temperature DW. The configuration of the system is shown in Fig. 16. The system has the lowest energy cost compared with condensation dehumidification system, single DW system, two-stage DW system with electric heating method, especially when heat to electricity cost ratio is higher than 0.3. The application of two-stage DW systems may be restricted by the long and large size, by dividing one DW into four sections to achieve two-stage dehumidification on one rotor [71] provided a reference for hybrid HP two-stage DW system.

2.2.5. New concept HPDW system

To overcome the shortcomings for the HPDW systems mentioned above, some new concept HPDW systems have been proposed. Thermoelectric heat pump, which is based on the Peltier effect rather than vapor compression, is of small size. Cheon et al. [72] combined DW with thermoelectric heat pump, and compared the system energy performance with a conventional DOAS system. Though the hybrid Thermoelectric HPDW system has around 22% greater energy consumption than the conventional DOAS system, the proposed system has higher application potential for narrow places with dehumidification requirement.

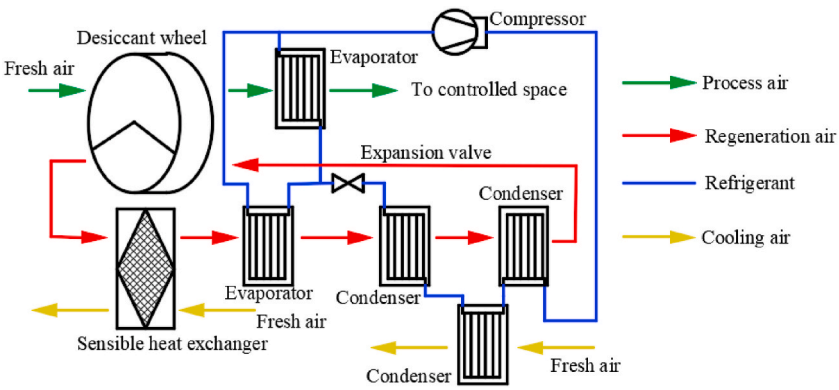

Fig. 12. CO_2 heat pump DW system featured two evaporators and three condensers [47].

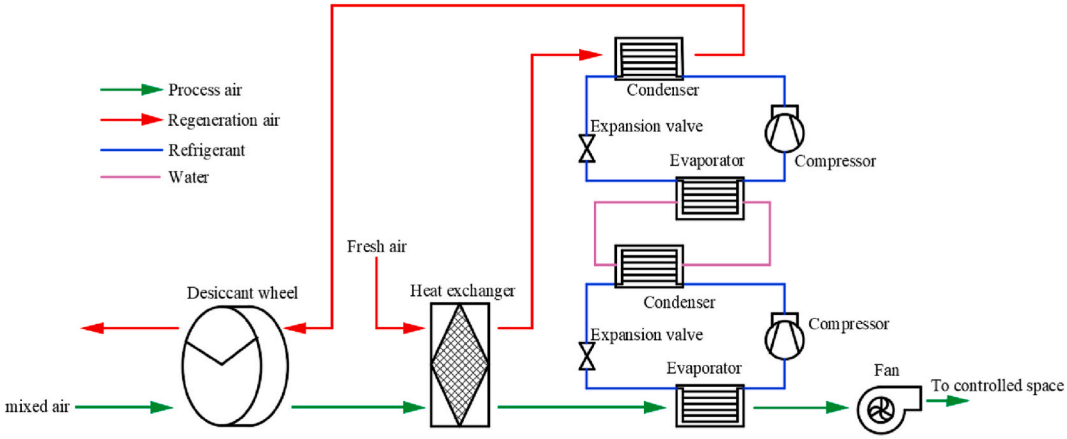

Fig. 13. Cascade heat pump DW system [65].

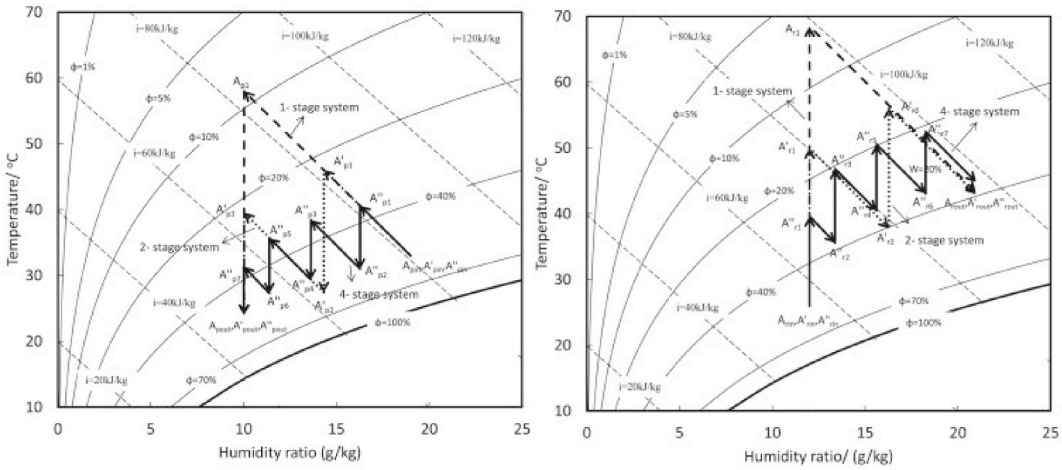

Fig. 14. Process and regeneration air handling process of multi-stage DW system [27].

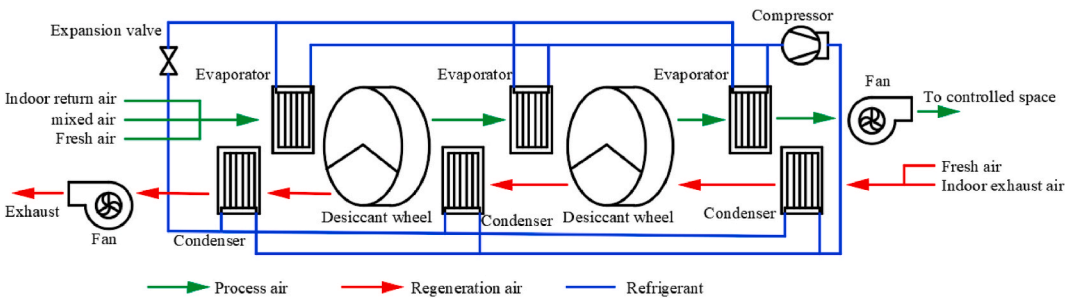

Fig. 15. Heat pump combined two-stage desiccant wheel system [42].

Internally-cooled DW has overall high performance than conventional DW, due to the low process air outlet temperature and humidity ratio [73]. Based on the beneficial effect, desiccant coated heat exchangers have been studied widely by researchers [74], and by adopting the technology on evaporator and condenser of heat pump, desiccant-enhanced heat pump system generated. Aynur et al. [23] introduced a heat pump desiccant fresh air unit (See Fig. 17), and tested by field measurement in an office suite. The adsorption and regeneration of desiccant layer were achieved by converting the four-way reversing valve of HP and flow direction of fresh air and exhaust air. However, the converting period, which relates to the process and regeneration section area ratio and rotational speed, was not specified with optimization study. System COP and dehumidification capacity were adopted for system performance evaluation. 12.9 g/kg dehumidification capacity was achieved with power consumption of 1.9 kW.

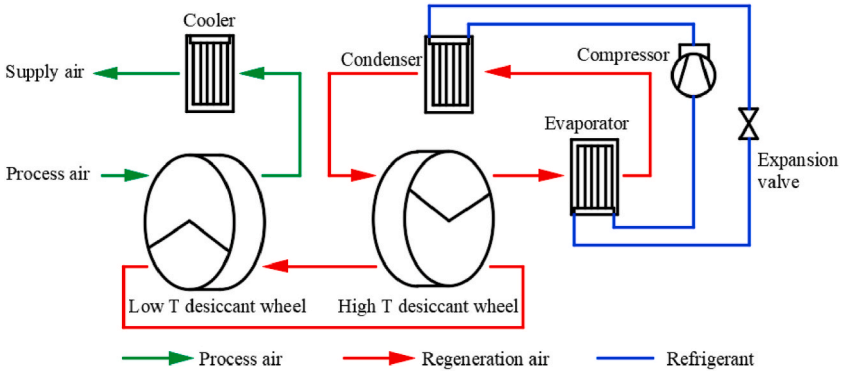

Fig. 16. Heat pump combined cascading desiccant wheel system [41].

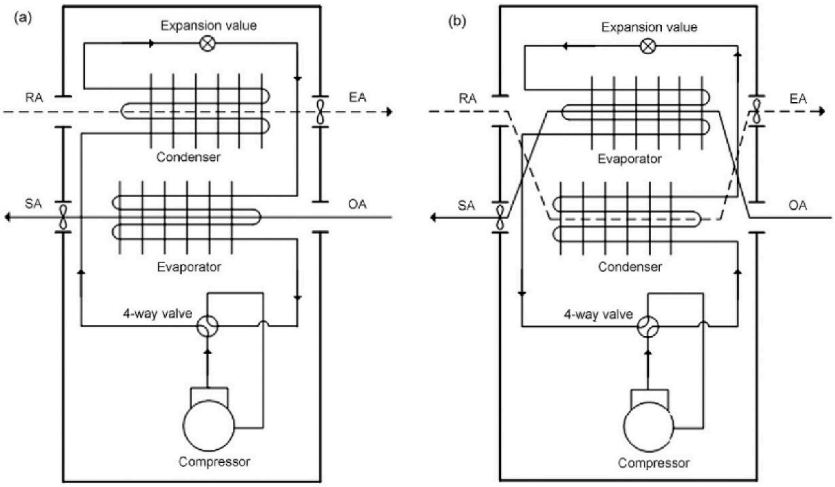

Fig. 17. Heat pump desiccant fresh air unit [23].

Yuan et al. [75] and Tu et al. [76] studied a desiccant-enhanced direct expansion heat pump. In the study of Yuan et al. [75], only fresh air is cooled and dehumidified, while the mixed air of fresh air and indoor return air is processed in the study of Tu et al. [76], and heating condition is also included. Though the desiccant enhanced heat pump can effectively improve the dehumidification performance, the heat exchange efficiency is reduced due to the additive thermal resistance of the desiccant layer, which may cause the insufficient sensible load handling performance [77].

2.3. Performance comparison

2.3.1. System performance

The research towards HPDW systems is of different configuration and under different operation scenario (building type, operation period and climate region), and the systems are of different energy performance. The comparison of HPDW system with different configurations is summarized in Table 3.

The operation conditions and building type of each research are different, and the system shows different performance though with the same configuration. Though the operation condition is different, it can be found that desiccant coated heat exchanger unit has the highest performance and the smallest system volume due to the integration of adsorbent and evaporator (condenser), the cooling COP of this kind of system can reach 6.2. Heat pump combined two-stage system has higher system COP than single-stage system, while two-stage system has larger bulk, and may not be suitable for residence. The system COP of two-stage and single-stage system may reach 5.8 and 5.4. Though high temperature heat pump system can generate high DW regeneration air temperature, the system COP is much lower, which is only 2.1. On the other hand, solar powered system type also has higher regeneration air temperature, while the system COP is not as high enough ($\leq$3.59), and the solar panel requires much higher primary investment. Thus, high temperature type and solar powered type may be more suitable for spaces with low humidity requirement rather than conventional buildings.

2.3.2. Economic aspects

Due to the additional equipment of the HPDW system (DW, heat exchanger, heater and etc.), the primary investment increases compared with conventional system. Thus, the economic analysis is required by taking the operating cost and primary investment into

Table 3
Summary and comparison of HPDW system.

Ref.	System and configuration	Scenario and operation	System performance
[18]	Fresh air post cooling Regeneration: electric, gas, solar energy Heat recovery: wheel type	Outdoor: 35 °C, 18 g/kg Indoor: 26 °C, 11.6 g/kg Regeneration: 72.2–110 °C	System COP: 1.5–2.9 (Electric heater) 2.6–3.8 (Gas for regeneration) 3.9–4.5 (Solar for regeneration)
[19]	Evaporator for process air cooling Regeneration: condenser	Outdoor: 22–32 °C, 12–18 g/kg Regeneration: 46–50 °C	Energy consumption: 2.41 kW (Cooling-desiccant) 1.86 kW (Cooling-desiccant) E.F.: 1.78 (Cooling-desiccant) 2.3 (Cooling-desiccant)
[48]	Evaporator for process air pre-cooling Regeneration: condenser & electric heater	Outdoor: 27.5 °C, 16.2 g/kg Indoor: 25 °C, 60% Regeneration: 55 °C	–
[20]	One evaporator for fresh air precooling and one for indoor radiant cooling Regeneration: heat recovery condenser Heat recovery: wheel type	Residence in Nanjing, China Outdoor: 34 °C, 22 g/kg 22.04 °C, 15 g/kg Indoor: 27 °C, 14.57 g/kg Regeneration: 40–55 °C	System COP: 3.52–5.34 (evaporating 17 °C) 2.63–3.86 (evaporating 7 °C)
[52]	Evaporator for process air post cooling Regeneration: condenser Heat recovery: heat exchanger	Outdoor: 25–34 °C, 8.5–20.5 g/kg Indoor: 26 °C, 8.5–14.5 g/kg Regeneration: 35–60 °C	Heat pump COP: 6–12 (2–3 times higher than conventional vapor compression system)
[44]	Evaporator for process air post cooling Regeneration: condenser & electric heater	Room in Changi and Singapore (tropical climate) Outdoor: a sunny day Indoor: 23 °C, 60% Regeneration: ambient+20 °C to ambient +30 °C	1.3% (recirculation mode), 2.1% (ventilated mode), and 9.4% (standard mode) energy saving than conventional air conditioning unit Economic: payback period ≤5 years (4-kW system operated for 12 h a day)
[24]	Evaporator for process air post cooling Regeneration: condenser and solar hot water Solar photovoltaic	Mixed air condition (fresh air and return air): 29.5 °C, 20.3 g/kg 28.5 °C, 18.1 g/kg 27.5 °C, 15.7 g/kg 26.5 °C, 13.4 g/kg Regeneration: 55–95 °C	COP for heat pump: 4.5–6.2 Thermal COP: 0.6–2.7
[26]	High temperature heat pump & DW: Evaporator for process air post cooling Regeneration: condenser	Outdoor: 30–38 °C, 10–20 g/kg Indoor: 26 °C, 11 g/kg Regeneration: 60–65 °C	Compressor COP: 1.7–2.4
[31]	Evaporator for process air post cooling Regeneration: electric heater Heat recovery: wheel type	Test room in Roorkee, North India (hot and humid climate zone) Outdoor: 35 °C, 70% Indoor: 26 °C, 50% Regeneration: 62–139 °C	System COP: 3.7–5.4
[32]	Evaporator for process air post cooling Regeneration: condenser and electric heater Heat recovery: cross flow heat exchanger	Hong Kong Outdoor: 30 °C, 19 g/kg Indoor: within thermal comfort zone of ASHRAE Standard 55 Regeneration: 60–120 °C	System COP (exclude electric heater): 2.5–3.1
[33]	Solar energy heat pump DW Cooling coil (from evaporator) for process air post cooling Regeneration: condenser & solar hot water Heat recovery: rotary heat exchanger	South European Outdoor: characteristic days (July) Indoor: 22–26 °C for summer 20–22 °C for winter Supply temperature: 20–24 °C Regeneration: ≤65 °C	System COP: 2.59–2.86
[34]	Solar energy heat pump DW Cooling coil (from evaporator) for process air post cooling Regeneration: solar hot water & electric heater Heat recovery: heat exchanger	Adana, Turkey Outdoor: cooling season Regeneration: 43–66 °C	System COP: 1.3–2.7
[38]	Solar energy heat pump DW Cooling coil (from evaporator) for process air post cooling Regeneration: condenser & solar hot water Heat recovery: heat exchanger	the University of Palermo, Italy Outdoor: year-round (7:00 a.m. to 7:00 p.m.) Indoor: 20–28 °C Regeneration: ≤78 °C	Thermal COP: ≤0.8 System COP (daily average): 1.94
[39]	Solar energy heat pump DW	Commercial premises (high latent load) in Hong Kong, China	Compressor COP: 3.41 (annual average)

(*continued on next page*)

Table 3 (*continued*)

Ref.	System and configuration	Scenario and operation	System performance
	Cooling coil (from evaporator) for process air post cooling Regeneration: solar hot water Heat recovery: rotary heat exchanger	Outdoor: year round (6:00 a.m. to 23:00 p.m.) (7:00 a.m. to 19:00 p.m.) Indoor: 22 °C, 60% and 24 °C, 60% Regeneration: ≤115 °C	
[57]	Solar energy heat pump DW Cooling coil (from evaporator) for process air post cooling Regeneration: solar hot water Heat recovery: sensible heat exchanger 10 operation modes	Airport terminal in Málaga and Madrid Outdoor: a summer day Indoor: 26 °C (cooling) 21 °C (heating) 45%–60% Regeneration: 54.8 °C (mean) (Málaga) 55.9 °C (mean) (Madrid)	System COP: 3.59 (Málaga)
[45]	Type1: chiller for post cooling, solar for regeneration, with heat exchanger Type2: chiller for post cooling, solar for regeneration, with heat exchanger, enthalpy recovery from return air Type3: chiller for post cooling, condenser and solar for regeneration, with heat exchanger	Lecture room and office in Palermo, Italy Outdoor: Indoor: 26 °C (cooling) 20 °C (heating) 50% Regeneration: 62–70 °C	Primary energy/Cooling energy: Type1: 0.35–0.95 Type2: 0.45–0.95 Type3: 0.15–0.83 Simple payback time: 15–25 years
[25]	High temperature heat pump & DW: Evaporator for process air post cooling Regeneration: condenser	Outdoor: 28–40 °C, 8–20 g/kg Regeneration: 60–66 °C	System COP: 1.7–2.1
[40]	High temperature heat pump Evaporator for process air post cooling Regeneration: condenser and electric heater	Typical climate zone in China Outdoor: 28–38 °C 10–18 g/kg Indoor: 27 °C, 47% Regeneration: 63 °C	System COP: 1.3–2.0
[61]	High temperature heat pump Evaporator for process air post cooling Regeneration: condenser and electric heater	Outdoor: 28–40 °C 8–22 g/kg Indoor: 26 °C, 11 g/kg Regeneration: 57–66 °C	Desiccant wheel COP: 0.22–0.28
[65]	Cascade heat pump and DW Evaporator for process air post cooling Regeneration: condenser Heat recovery: sensible heat exchanger	Market in Nanjing, China Outdoor: 35 °C, 61% Indoor: 26 °C, 60% Regeneration: 70 °C	COP: 5.65 (first-stage heat pump) 5.41 (second-stage heat pump)
[28]	Heat pump two-stage DW: 3 evaporators for pre-cooling, inter-cooling and post cooling Regeneration: 2 heat recovery condensers DW: plat type	Outdoor: 35 °C, 21.2 g/kg Indoor: 27 °C Regeneration: 36.2–37.1 °C	System COP: 5.4–5.8
[42]	Multi-evaporator, multi-condenser and two-stage DW system Evaporator for process air pre-cooling, inter-cooling and post cooling Regeneration: two recovery condensers	Beijing, China Outdoor: 33 °C, 19 g/kg Indoor: 26 °C, 12 g/kg Regeneration: 43.7 °C (second-stage) 44.5 °C (first-stage)	Compressor COP: 5.5
[41]	Cascade DW system Evaporator for post cooling and condensation Regeneration: condenser	Food processing facility Outdoor: 28 °C, 65% Process air: 12.5 °C, 1 g/kg Required supply air: 10 °C, 0.2 g/kg (dew point −31.4 °C) Regeneration: 68 °C	COP: 2.7 and 2.5
[72]	Thermoelectric heat pump and DW Thermoelectric heat pump for post cooling Regeneration: thermoelectric heat pump and electric heater Heat recovery: wheel type	Office Outdoor: June, July, August (summer) Indoor: 24 °C, 50% (cooling) 20 °C, 50% (heating)	Primary energy consumption: 79.22 MWh during summer COP: 0.2–0.6
[23]	Desiccant coated heat exchanger (heat pump desiccant unit)	Office in University of Maryland, College Park	System COP: 2.5–5.5

(*continued on next page*)

Table 3 (*continued*)

Ref.	System and configuration	Scenario and operation	System performance
		Long-term operation test: 7:00 a.m.-24:00 p.m. on Sunday, 30 July	
[75]	Desiccant coated heat exchanger (heat pump desiccant unit)	Outdoor: 35 °C, 21.4 g/kg Indoor: 25 °C, 11.1 g/kg	Dehumidification rate: 7.1–8.7 g/kg System COP: 4.6–5.5
[76]	Desiccant coated heat exchanger (heat pump desiccant unit)	Outdoor: 35 °C, 60% (cooling) 9.5 °C, 45.5 g/kg (heating) Indoor: 21 °C, 55% (cooling) 25 °C, 50% (heating) Regeneration: approach 43 °C	System COP: 6.2 (cooling) 6.5 (heating)
[78]	Desiccant coated heat exchanger (heat pump desiccant unit) (heating and humidification)	Office suite Long-term operation test: 7:00 to 00:00 on Sundays, 21 December Indoor: 4.4 g/kg	System heating performance factor: 3.75–5.97

consideration.

By using the HPDW system (Fig. 3 b), with heat exchanger, in a room of 6.4 m^2 in tropic, the HPDW system is more suitable when system cooling capacity, room air change rate is high. The payback period is less than 5 years with average electricity price of US$ 0.1/kWh, cooling capacity higher than 4 kW, 4 times per hour air change rate and operates for 12 h per day [44]. Adopted in an office room in in Palermo (hot and humid climate), the simple payback period of a solar powered HPDW system (Fig. 10), is about 25 years, and decreases to about 15 years when solar PV/T is used. When condensation heat is not used for regeneration air heating, the simple payback period of the solar powered HPDW system is 17 years [45]. Heat pump combined two-stage DW system requires higher primary cost compared with single-stage one, due to the extra DW, evaporator and condenser. When used in hot and humid climate zone for cooling and dehumidification, payback period of two-stage system is 5.3 years when the relative humidity requirement of the controlled space is 30%, compared with single-stage system [79].

3. Function development of HPDW system

With different environment control requirement and the characteristics of HPDW system, some new functions and applications

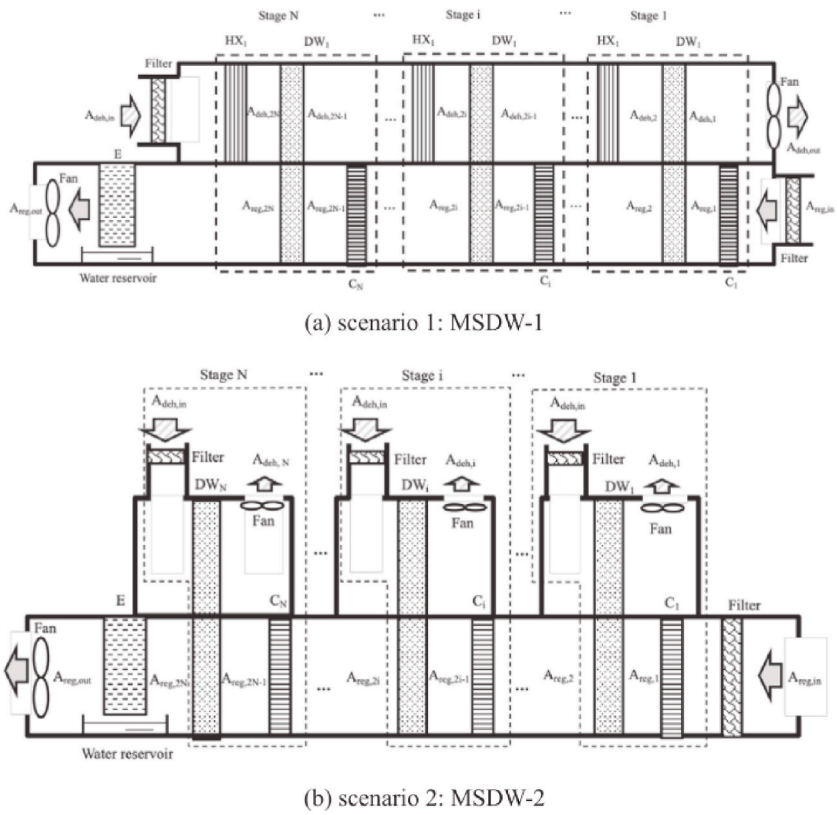

Fig. 18. Two heat pump multi-stage DW system configurations for water harvesting [85].

have been developed, such as air humidification and air cleaning.

3.1. Humidification and water harvesting

By reversing the air flow directions of process air and regeneration air, the hybrid DW system can also be adopted for indoor heating and humidification in winter [80–82], achieving moisture recovery. By condensing the hot and humid air, water harvesting system based on hybrid DW system has been widely studied [83].

HPDW system can also be adopted for co-production of water dehumidification simultaneously. Heidari et al. [84] combined solar panel with HPDW and evaporative cooling system for air cool and dehumidification as well as water co-production. The moisture content of exhaust regeneration air is recycled to cover all of the evaporative cooler water consumption, and also part of the domestic water usage. Dynamic hourly simulation of the system is conducted. The simulation results show that the proposed system is able to provide comfort temperature and relative humidity in a hot and humid climate. Moisture harvesting produce about 590 L water during a week, which covers all of the evaporative cooler water consumption, and provides an excess amount of 289 L for domestic usage. Electricity consumption of the proposed system is 60% lower than the reference system, while its natural gas consumption is 30% higher than VCS.

Similar to multi-stage DW dehumidification system, Tu et al. [85] proposed and compared HP combined multi-stage DW system with two configurations for water harvesting (See Fig. 18), and analysed water harvesting rate and water harvesting efficiency. The heat recovery between the regeneration air inlet and the outlet of the last-stage DW regeneration outlet air can improve the system performance by almost 70%. 16 working conditions, generalized from the ambient conditions of 4 cities in western China, were adopted for system performance evaluation. Under mild ambient conditions, the highest water harvesting efficiency varies form 1.6 kg/kWh to 2.4 kg/kWh, and water harvesting rate of 32.5 kg/h can be obtained.

Analysing with ideal Carnot cycle and reversible Carnot cycle, two-stage DW water harvesting system combined with HP, featured multi-condensers, for condensing regeneration air and heating the regeneration air is studied in Ref. [86]. Independent dehumidification air contributes to reduce the regeneration air temperature requirement and improving the humidification efficiency. Dry (10 °C, 5 g/kg) and mild (20 °C, 12 g/kg) climate zone is studied, and dehumidification to humidification section area ratio was optimized of 2 and 1 for dry and mild climate zone, respectively. Combining with HP, the hybrid system has overall merits in water harvesting rate and efficiency compared with direct cooling system, and solar thermal energy is recommended for improving the system performance.

3.2. Air cleaning

The mechanism of adsorption air cleaning and adsorption dehumidification is of the same. Thus, by combining DW with HP, not only water vapor can be removed from process air to achieve dehumidification, mechanical pollutants can also be adsorbed to achieve air clean. Sheng et al. [87] evaluated the inorganic air pollutant, NH_3, removing performance of a clean air heat pump (CAHP), which is combined by a DW and a HP (See Fig. 19). The regeneration temperature requirement for removing NH_3 is much higher, of which 90 °C is required.

The removing of moisture and air pollutants can be achieved simultaneously, while the regeneration temperature requirement is different and the competitive adsorption is existing. Sheng et al. [88] evaluated the air cleaning performance of the system when regenerating under low temperature. The air clean efficiency of the CAHP for five typical indoor air pollutants, including formaldehyde, was evaluated. It was found that the decreasing of regeneration temperature by 10 °C will cause a reduction of air cleaning efficiency by 5% ~15%. By taking both dehumidification efficiency and air clean efficiency into consideration, Sheng et al. [89] studied the effect of moisture on air clean performance of the CAHP. It was found that the water vapor in air hinders the removal of VOCs: the desorption efficiency of water-soluble pollutants can be improved by 3–8% with the increasing of air humidity, while the desorption efficiency of non-water-soluble pollutants is reduced by 8–18%. During the field test of CAHP by Sheng et al. [90], TVOC removal efficiency can reach 82.7% and 96.7% for regeneration temperature of 60 °C and 70 °C, respectively. Since the air is cleaned by the CAHP, 70% of the fresh air can be reduced, and the air handling energy can be saved.

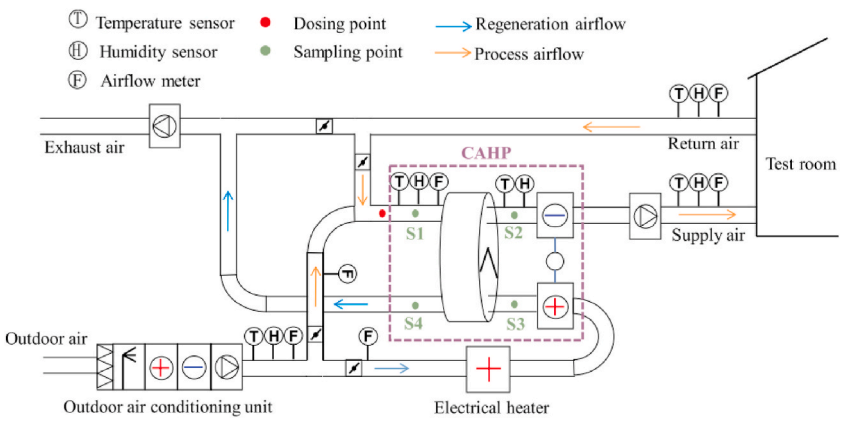

Fig. 19. Clean air heat pump system [87].

Sheng et al. [91] studied the effect of regeneration air source (indoor exhaust air or outdoor fresh air) on the energy performance and pollutant removal efficiency of CAHP. Though regenerated by indoor exhaust air can improve the dehumidification performance, while the results showed that using the pollutant air for regeneration reduces air clean efficiency of CAHP with a reduction of around 10%. Thus, whether using indoor or outdoor air as the regeneration air source needs to be selected based on the dehumidification requirement, weather condition and indoor pollutant level when the CAHP is in actual application.

4. Discussion

The typical outdoor conditions for HPDW dehumidification systems in literatures are summarized in Fig. 20. It can be observed that the outdoor air temperature varies from 20 °C to 40 °C, and humidity ratio varies from 8 g/kg to 24 g/kg. Obviously, the diversity of the operation conditions, mainly metrological data and indoor sensible-moisture load condition, causes the incompatibility among the systems with different configuration, though using the same performance indicators. Thus, it is difficult to conclude which kind of systems are more energy efficient and applicable for what kind of climate region. On the other hand, the energy saving potential and dehumidification performance for most of the hybrid system is generalized by comparing with conventional system, and there is lack of the study that focused on the performance comparison among hybrid DW systems.

As one of the most important components of the hybrid HPDA system, the parameters of the DW have high influence on the system performance. The parameters of the adopted DWs in researches are summarized in Table 4, including material, regeneration section area ratio, thickness and rotational speed.

It can be found that most of the previous research focused on the combination method and the improvement of the configuration for the hybrid system, and the design of the components is not mentioned or detailed researched. The adopted DW in different systems are of different parameters, including material, thickness, regeneration section aera ratio and rotational speed. For different climate region, different humidity requirement and building load characteristic, the DWs and heat pump have to be fine designed for matching the DWs and heat pump, in terms of cooling and dehumidification capacity of evaporators and DWs, as well as heating by condensers and regeneration air temperature requirement. Especially for heat pump combined two-stage DW system, the dehumidification rate of the second-stage DW is largely reduced due to the low process air inlet humidity ratio. Thus, the two DWs can be of different configuration, and the optimization study of the two DWs featured with different material, structural parameters and the regeneration air source for the two DWs can be further conducted to improve the system performance. The suitable utilization site for two-stage DW system and single-stage DW system needs to be further clarified, including indoor humidity requirement, climate region, indoor sensible and latent load ratio, by taking coefficient of performance of the system, air flow resistance and initial investment into consideration.

The study about hybrid heat pump combined two-stage DW systems is of small amount compared with that of single-stage system. On the other hand, the study about HPTD system is mainly focused on the application of civil buildings. Two-stage DW systems are widely used in industrial field for low humidity environment control, and the study for system performance and optimization for energy saving is intermittent. It is highly recommended to combine two-stage DW system with heat pump by using condensation energy for DW regeneration for low humidity space.

The application study for the hybrid system, especially for long term operation, is mainly through simulation methods. The experimental study and test are only focused on several working conditions, and there is lack of long-term field test, either for civil buildings or industrial field. Based on the testing results, the operation strategies and system design need to be optimized by taking humidity control ability and energy performance of the whole system into consideration.

5. Conclusion

This research summarizes the development and the application study about HPDW system. The development of HPDW system is

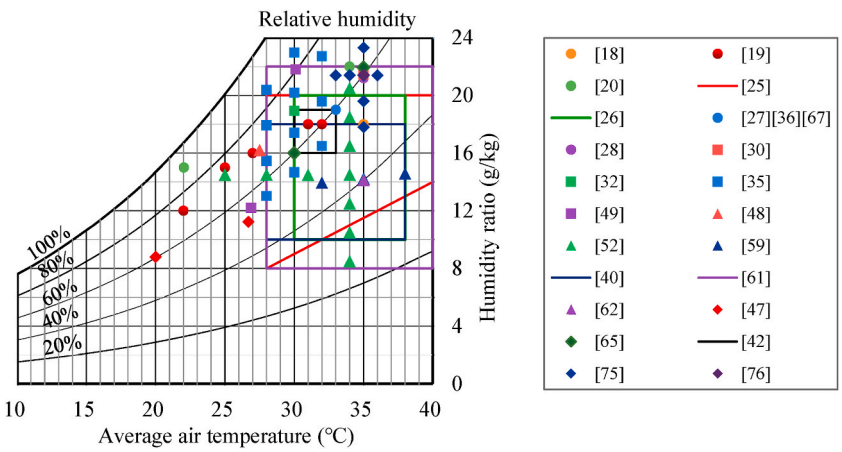

Fig. 20. The summary of outdoor air conditions for research of HPDW dehumidification system.

Table 4
Summary of DW parameters in literatures.

Parameters		References
Material	Silica gel	[18,25,27,30,36,38,40,41,61,62,67]
	3A molecular sieve	[41]
	Synthesized metal silicate	[35,44,46,49]
	Silica gel/polymer composite	[19]
	LiCl	[32]
	Super desiccant polymer (SDP)	[50]
Process to regeneration section area ratio	1:1	[27,29,36,39,48,50,52,67]
	2:1	[62]
	3:1	[18,24–26,32,35,40,41,46,49,61]
Thickness (mm)	50	[28]
	100	[19,30,35,42,46,49]
	150	[24,41]
	200	[18,25,27,29,32,36,38–40,44,52,61,67]
	300	[62]
	400	[67]
Rotational speed (r/h)	5	[41]
	6	[44]
	7	[29,32]
	8	[24,30]
	10	[19,39,40,52,62]
	12	[29]
	13	[29]
	15	[25,38,61]
	20	[35,36,46,49]
	24	[18]
	42	[58]

focused on two main methods: improving the regeneration temperature (adopting auxiliary heaters, solar energy and high temperature heat pump) to achieve high dehumidification amount and reducing the regeneration temperature requirement by using two-stage DW system. System configurations, changing the position of components and inserting heat exchangers, have been widely proposed and studied. Some new concept HPDW system by coating desiccant material directly on evaporator and condenser is also researched. The basic purpose of the hybrid HPDW system is for dehumidification and cooling, both for civil buildings and industrial production with low humidity requirement. With the improvement of production and living, the function of HPDW system has been developed. Humidification and heating can be achieved by reversing the supply air and exhaust regeneration air, liquid water can be harvested by condensing exhaust regeneration air, and indoor gaseous pollutants can also be simultaneously removed with moisture to achieve air cleaning. The HPDW system is of wide application prospect, due to the multi-function and the ability for controlling indoor temperature and humidity with higher energy efficiency than conventional air conditioning system.

Though there is already a lot of researches on hybrid heat pump and desiccant wheel system, it is still possible to make progresses especially in the following aspects:

(1) It is suggested to optimize the parameters of the main components, especially the material, regeneration section area ratio and thickness for the desiccant wheel, and to match the desiccant wheel with heat pump system towards different building load and metrological parameters through long period operation research.
(2) The comparison of the hybrid system with different configurations is highly recommended, as most of the energy saving potential for hybrid system is obtained by comparing with conventional system. This may contribute to define what kind of configuration is suitable for what climate zone and operation scenario.
(3) There is lack of the research about the application of heat pump combined two-stage desiccant wheel system that utilizes the condensation energy to heat the regeneration air for industrial production with low humidity requirement. On the other hand, the application of the two-stage desiccant wheel system and single-stage desiccant wheel system needs to be clarified by taking the energy consumption, pressure loss and economy into consideration.

Declaration of competing interest

The authors declare that they have no known competing financial interests or personal relationships that could have appeared to influence the work reported in this paper.

Acknowledgement

This research is supported by the National Natural Science Foundation of China under grant No. 52178085.

References

[1] M.W. Shahzad, M. Burhan, L. Ang, K.C. Ng, Energy-water-environment nexus underpinning future desalination sustainability, Desalination 413 (2017) 52–64.

[2] P. Johansson, A. Ekstrand-Tobin, T. Svensson, G. Bok, Laboratory study to determine the critical moisture level for mould growth on building materials, Int. Biodeterior. Biodegrad. 73 (2012) 23–32.
[3] K.F. Nielsen, G. Holm, L.P. Uttrup, P.A. Nielsen, Mould growth on building materials under low water activities. Influence of humidity and temperature on fungal growth and secondary metabolism, Int. Biodeterior. Biodegrad. 54 (4) (2004) 325–336.
[4] L.G. Arlian, M.M. Veselic, Reevaluation of the humidity requirements of the house dust mite dermatophagoides farinae (Acari: pyroglyphidae), J. Med. Entomol. (4) (1981) 351–352.
[5] L.G. Arlian, J.S. Neal, D.L. Vyszenski-Moher, Reducing relative humidity to control the house dust mite Dermatophagoides farinae, J. Allergy Clin. Immunol. 104 (4) (1999) 852–856.
[6] P. Markowicz, L. Larsson, Influence of relative humidity on VOC concentrations in indoor air, Environ. Sci. Pollut. Control Ser. 22 (8) (2015) 5772–5779.
[7] H.M. Kamar, N. Kamsah, M.I. Alhamid, K. Sumeru, Effect of regeneration air temperature on desiccant wheel performance, Int J Technol 7 (2) (2016) 281–287.
[8] A.R. Zendehboudi, R. Hashemi, Fabrication and experimental study of regeneration temperature, rotational speed and inlet air humidity on the performance of a desiccant wheel, Ijst-T Mech Eng 39 (M2) (2015) 451–458.
[9] S. Muthu, P. Talukdar, S. Jain, Effect of regeneration section angle on the performance of a rotary desiccant wheel, J. Therm. Sci. Eng. Appl. 8 (1) (2016) 1–12.
[10] A. Zendehboudi, H. Esmaeili, Effect of supply/regeneration section area ratio on the performance of desiccant wheels in hot and humid climates: an experimental investigation, Heat Mass Tran. 52 (6) (2016) 1175–1181.
[11] N. Riaz, M. Sultan, T. Miyazaki, M.W. Shahzad, M. Farooq, U. Sajjad, Y. Niaz, A review of recent advances in adsorption desalination technologies, Int. Commun. Heat Mass Tran. 128 (2021), 105594.
[12] S. Ashraf, M. Sultan, M. Bahrami, C. McCague, M.W. Shahzad, M. Amani, R.R. Shamshiri, H.M. Ali, Recent progress on water vapor adsorption equilibrium by metal-organic frameworks for heat transformation applications, Int. Commun. Heat Mass Tran. 124 (2021), 105242.
[13] M.M. Rafique, P. Gandhidasan, S. Rehman, L.M. Alhems, Performance analysis of a desiccant evaporative cooling system under hot and humid conditions, Environ Prog Sustain 35 (5) (2016) 1476–1484.
[14] T.S. Ge, Y. Li, R.Z. Wang, Y.J. Dai, Experimental study on a two-stage rotary desiccant cooling system, Int. J. Refrig. 32 (3) (2009) 498–508.
[15] T.S. Ge, F. Ziegler, R.Z. Wang, H. Wang, Performance comparison between a solar driven rotary desiccant cooling system and conventional vapor compression system (performance study of desiccant cooling), Appl. Therm. Eng. 30 (6) (2010) 724–731.
[16] Z. Guidara, M. Elleuch, H. Ben Bacha, New solid desiccant solar air conditioning unit in Tunisia: design and simulation study, Appl. Therm. Eng. 58 (1) (2013) 656–663.
[17] N. Enteria, H. Yoshino, A. Mochida, R. Takaki, A. Satake, R. Yoshie, T. Mitamura, S. Baba, Construction and initial operation of the combined solar thermal and electric desiccant cooling system, Sol. Energy 83 (8) (2009) 1300–1311.
[18] W. Liu, Z. Lian, R. Radermacher, Y. Yao, Energy consumption analysis on a dedicated outdoor air system with rotary desiccant wheel, Energy 32 (9) (2007) 1749–1760.
[19] C.H. Chen, C.Y. Hsu, C.C. Chen, Y.C. Chiang, S.L. Chen, Silica gel/polymer composite desiccant wheel combined with heat pump for air-conditioning systems, Energy 94 (2016) 87–99.
[20] F.H. Ge, X.L. Guo, Z.C. Hu, Y. Chu, Energy savings potential of a desiccant assisted hybrid air source heat pump system for residential building in hot summer and cold winter zone in China, Energy Build. 43 (12) (2011) 3521–3527.
[21] F. Comino, M. Ruiz de Adana, F. Peci, Energy saving potential of a hybrid HVAC system with a desiccant wheel activated at low temperatures and an indirect evaporative cooler in handling air in buildings with high latent loads, Appl. Therm. Eng. 131 (2018) 412–427.
[22] T.S. Ge, Y.J. Dai, R.Z. Wang, Review on Solar Powered Rotary Desiccant Wheel Cooling System, Renewable and Sustainable Energy Reviews, 2014.
[23] T.N. Aynur, Y.H. Hwang, R. Radermacher, Field performance measurements of a heat pump desiccant unit in dehumidification mode, Energy Build. 40 (12) (2008) 2141–2147.
[24] Y.F. Liu, Y.Y. Chen, D.J. Wang, J.R. Liu, L. Li, X. Luo, Y.Y. Wang, J.P. Liu, Performance evaluation of a hybrid solar powered rotary desiccant wheel air conditioning system for low latitude isolated islands, Energy Build. 224 (2020), 110208.
[25] Y. Sheng, Y.F. Zhang, N. Deng, L. Fang, J.Z. Nie, L.J. Ma, Experimental analysis on performance of high temperature heat pump and desiccant wheel system, Energy Build. 66 (2013) 505–513.
[26] Y. Sheng, Y.F. Zhang, L. Fang, J.Z. Nie, L.J. Ma, Optimization analysis of high temperature heat pump coupling to desiccant wheel air conditioning system, Trans. Tianjin Univ. (3) (2014) 182–188.
[27] R. Tu, X.H. Liu, Y. Jiang, F. Ma, Influence of the number of stages on the heat source temperature of desiccant wheel dehumidification systems using exergy analysis, Energy 85 (2015) 379–391.
[28] R. Tu, X.-H. Liu, Y. Jiang, Performance analysis of a new kind of heat pump-driven outdoor air processor using solid desiccant, Renew. Energy 57 (2013) 101–110.
[29] K.F. Fong, T.T. Chow, C.K. Lee, Z. Lin, L.S. Chan, Advancement of solar desiccant cooling system for building use in subtropical Hong Kong, Energy Build. 42 (12) (2010) 2386–2399.
[30] D. La, Y. Dai, Y. Li, T. Ge, R. Wang, Case study and theoretical analysis of a solar driven two-stage rotary desiccant cooling system assisted by vapor compression air-conditioning, Sol. Energy 85 (11) (2011) 2997–3009.
[31] D.B. Jani, M. Mishra, P.K. Sahoo, Performance studies of hybrid solid desiccant-vapor compression air-conditioning system for hot and humid climates, Energy Build. 102 (2015) 284–292.
[32] L. Yong, K. Sumathy, Y.J. Dai, J.H. Zhong, R.Z. Wang, Experimental study on a hybrid desiccant dehumidification and air conditioning system, J. Sol. Energy Eng. 128 (1) (2005) 77–82.
[33] A. Frein, M. Muschera, R. Scoccia, M. Aprile, M. Motta, Field testing of a novel hybrid solar assisted desiccant evaporative cooling system coupled with a vapour compression heat pump, Appl. Therm. Eng. 130 (2018) 830–846.
[34] E. Hürdoğan, O. Büyükalaca, T. Yılmaz, A. Hepbasli, İ. Uçkan, Investigation of solar energy utilization in a novel desiccant based air conditioning system, Energy Build. 55 (2012) 757–764.
[35] D.B. Jani, M. Mishra, P.K. Sahoo, Experimental investigation on solid desiccant-vapor compression hybrid air-conditioning system in hot and humid weather, Appl. Therm. Eng. 104 (2016) 556–564.
[36] R. Tu, X.-H. Liu, Y. Jiang, Irreversible processes and performance improvement of desiccant wheel dehumidification and cooling systems using exergy, Appl. Energy 145 (Supplement C) (2015) 331–344.
[37] A.M. Baniyounes, G. Liu, M.G. Rasul, M.M.K. Khan, Analysis of solar desiccant cooling system for an institutional building in subtropical Queensland, Australia, Renew. Sustain. Energy Rev. 16 (8) (2012) 6423–6431.
[38] M. Beccali, P. Finocchiaro, B. Nocke, Energy performance evaluation of a demo solar desiccant cooling system with heat recovery for the regeneration of the adsorption material, Renew. Energy 44 (2012) 40–52.
[39] K.F. Fong, C.K. Lee, T.T. Chow, A.M.L. Fong, Investigation on solar hybrid desiccant cooling system for commercial premises with high latent cooling load in subtropical Hong Kong, Appl. Therm. Eng. 31 (16) (2011) 3393–3401.
[40] Y. Sheng, Y.F. Zhang, G. Zhang, Simulation and energy saving analysis of high temperature heat pump coupling to desiccant wheel air conditioning system, Energy 83 (2015) 583–596.
[41] Q. Chen, J.R. Jones, R.H. Archer, A dehumidification process with cascading desiccant wheels to produce air with dew point below 0 degrees C, Appl. Therm. Eng. 148 (2019) 78–86.
[42] R. Tu, X.-H. Liu, Y. Jiang, Performance analysis of a two-stage desiccant cooling system, Appl. Energy 113 (Supplement C) (2014) 1562–1574.
[43] P.J. Martinez, P. Martinez, V.M. Soto, A.S. Kaiser, Comparison of the performance of two different DOAS configurations involving conventional and renewable energies, Sol. Energy 169 (2018) 284–296.

[44] A. Subiantoro, Feasibility analysis of the hybrid dehumidifier-air conditioner technology for small-scale household applications in the tropics, Sci Technol Built En 25 (2) (2019) 177–188.
[45] M. Beccali, P. Finocchiaro, B. Nocke, Energy and economic assessment of desiccant cooling systems coupled with single glazed air and hybrid PV/thermal solar collectors for applications in hot and humid climate, Sol. Energy 83 (10) (2009) 1828–1846.
[46] D.B. Jani, M. Mishra, P.K. Sahoo, Performance analysis of a solid desiccant assisted hybrid space cooling system using TRNSYS, J. Build. Eng. 19 (2018) 26–35.
[47] Y.F. Liu, D.R. Meng, S. Chen, Feasibility study on an energy-saving desiccant wheel system with CO2 heat pump, EEEP2017, in: INTERNATIONAL CONFERENCE ON ENERGY ENGINEERING AND ENVIRONMENTAL PROTECTION, 2018.
[48] P. Martínez, C. Llorca, J. Pla, P. Martínez, Experimental validation of the simulation model of a DOAS equipped with a desiccant wheel and a vapor compression refrigeration system, Energies 10 (9) (2017) 1330.
[49] D.B. Jani, M. Mishra, P.K. Sahoo, Investigations on effect of operational conditions on performance of solid desiccant based hybrid cooling system in hot and humid climate, Therm. Sci. Eng. Prog. 7 (2018) 76–86.
[50] S. Liu, C.H. Jeong, M.S. Yeo, Effect of evaporator position on heat pump assisted solid desiccant cooling systems, Energies 13 (22) (2020) 5918.
[51] K.-S. Yang, K. Hamid, S.-K. Wu, U. Sajjad, C.-C. Wang, Experimental analysis of a heat pump dryer with an external desiccant wheel dryer, Processes 9 (7) (2021).
[52] F.H. Ge, C. Wang, Exergy analysis of dehumidification systems: a comparison between the condensing dehumidification and the desiccant wheel dehumidification, Energy Convers. Manag. 224 (2020).
[53] S.C. Yang, Y. Tang, C. Lin, Comparison of three kinds of ai r-source heat pump heat recovery units, HV&AC (5) (2014) 92–96 (in Chinese).
[54] K. Nagano, S. Nakabayashi, M. Nakamura, J. Togawa, A. Kurokawa, Research and Development of Heat Pump Unit for Effective Air Conditioning and Hot Water Supply Integrated with Desiccant Ventilation System Using Wakkanai Siliceous Shale.
[55] P. Mavroudaki, C.B. Beggs, P.A. Sleigh, S.P. Halliday, The potential for solar powered single-stage desiccant cooling in southern Europe, Appl. Therm. Eng. 22 (10) (2002) 1129–1140.
[56] S.P. Halliday, C.B. Beggs, P.A. Sleigh, The use of solar desiccant cooling in the UK: a feasibility study, Appl. Therm. Eng. 22 (12) (2002) 1327–1338.
[57] J.M. Cejudo López, F.F. Hernández, F.D. Muñoz, A.C. Andrés, The optimization of the operation of a solar desiccant air handling unit coupled with a radiant floor, Energy Build. 62 (2013) 427–435.
[58] A.M. Baniyounes, M.G. Rasul, M.M.K. Khan, Experimental assessment of a solar desiccant cooling system for an institutional building in subtropical Queensland, Australia, Energy Build. 62 (2013) 78–86.
[59] H. Hao, Y.F. Zhang, G. Zhang, N. Deng, Experimental study of desiccant wheel assisted moderte and high temperature heat pump coupling air conditioning system, J. Tianjin Univ. (7) (2008) 864–870.
[60] Y.F. Zhang, X.W. Hu, Z.S. Miao, L.L. Wei, C.M. Chen, H. Hao, Cycle performance of heat pump in desiccant cooling sy stem, J. Chem. Ind. Eng. (9) (2009) 2177–2182 (in Chinese).
[61] Y. Sheng, Y.F. Zhang, Y.X. Sun, L. Fang, J.Z. Nie, L.J. Ma, Experimental analysis and regression prediction of desiccant wheel behavior in high temperature heat pump and desiccant wheel air-conditioning system, Energy Build. 80 (2014) 358–365.
[62] Y. Sheng, Y.F. Zhang, Y.X. Sun, G. Ding, Thermodynamic analysis of desiccant wheel coupled to high-temperature heat pump system, Sci Technol Built En 21 (8) (2015) 1165–1174.
[63] Y. Liu, L. Chen, Performance of an air conditioning system integrating high temperature heat pump desiccant wheel and radiation cooling system, Build. Sci. 36 (8) (2020) 92–98.
[64] G. Lo Basso, L. de Santoli, R. Paiolo, C. Losi, The potential role of trans-critical CO2 heat pumps within a solar cooling system for building services: the hybridised system energy analysis by a dynamic simulation model, Renew. Energy 164 (2021) 472–490.
[65] Q.Q. Song, B.L. Niu, Y.J. Yu, A new air-conditioning system of desiccant wheel dehumidification coupled with double-stage heat pump and system design, Build. Sci. 25 (12) (2009) 85–88 (in Chinese).
[66] T.S. Ge, Y. Li, Y.J. Dai, R.Z. Wang, Performance investigation on a novel two-stage solar driven rotary desiccant cooling system using composite desiccant materials, Sol. Energy 84 (2) (2010) 157–159.
[67] X.H. Liu, T. Zhang, Y.W. Zheng, R. Tu, Performance investigation and exergy analysis of two-stage desiccant wheel systems, Renew. Energy 86 (2016) 877–888.
[68] R. Tu, X.H. Liu, T. Zhang, Y. Jiang, Application of heat pump-driven two-stage desiccant wheel system in office buildings, Ashrae Tran 120 (1) (2014) 1–8.
[69] Y.J. Du, H.S. Xiao, Z.X. Yang, W.X. Shi, B.L. Wang, Y. Yu, Investigation and analysis on energy consumption of a power lithium battery plant, HV&AC 52 (1) (2022) 88–93 (in Chinese).
[70] L. Zhao, Analysis and research on low-humidity air conditioning system for lithium cell production workshops, Refrig. Air Cond. 20 (3) (2020) 27–34 (in Chinese).
[71] T.S. Ge, Y.J. Dai, R.Z. Wang, Y. Li, Experimental investigation on a one-rotor two-stage rotary desiccant cooling system, Energy 33 (12) (2008) 1807–1815.
[72] S.Y. Cheon, H. Lim, J.W. Jeong, Applicability of thermoelectric heat pump in a dedicated outdoor air system, ENERGY 173 (2019) 244–262.
[73] X. Zhou, M. Goldsworthy, A. Sproul, Performance investigation of an internally cooled desiccant wheel, Appl. Energy 224 (2018) 382–397.
[74] P. Vivekh, M. Kumja, D.T. Bui, K.J. Chua, Recent developments in solid desiccant coated heat exchangers - a review, Appl. Energy 229 (2018) 778–803.
[75] Y. Yuan, T.S. Ge, Experimental investigation under summer conditions on novel integrated dehumidification heat pump air-conditioning cycle, Journal of Refrigeration 39 (5) (2018) 59–66 (in Chinese).
[76] Y.D. Tu, R.Z. Wang, T.S. Ge, New concept of desiccant-enhanced heat pump, Energy Convers. Manag. 156 (2018) 568–574.
[77] W. Cao, T.S. Ge, X. Zheng, Y.J. Dai, R.Z. Wang, Experimental investigation on thermal performance of desiccant coated heat exchanger in series with heat exchanger, Journal of Refrigeration 38 (4) (2017) 59–66 (in Chinese).
[78] T.N. Aynur, Y. Hwang, R. Radermacher, Field performance measurements of a heat pump desiccant unit in heating and humidification mode, Energy Build. 42 (5) (2010) 678–683.
[79] S. Tian, X. Su, Y. Geng, H. Li, Y. Liang, Y. Di, Heat pump combined with single-stage or two-stage desiccant wheel system? A comparative study on different humidity requirement buildings, Energy Convers. Manag. 255 (2022), 115345.
[80] S. De Antonellis, M. Intini, C. Joppolo, L. Molinaroli, F. Romano, Desiccant wheels for air humidification: an experimental and numerical analysis, Energy Convers. Manag. 106 (2015) 355–364.
[81] A. Kashif, M. Ali, N.A. Sheikh, V. Vukovic, M. Shehryar, Experimental analysis of a solar assisted desiccant-based space heating and humidification system for cold and dry climates, Appl. Therm. Eng. 175 (2020), 115371.
[82] R. Tu, J. Li, Y. Hwang, Fresh air humidification in winter using desiccant wheels for cold and dry climate regions: optimization study of humidification processes, Int. J. Refrig. 118 (2020) 121–130.
[83] M. Liu, R. Tu, Z. Wu, J. Zhu, Performance analyses of desiccant wheel-assisted atmospheric water harvesting system using renewable heating and cooling sources, Energy Convers. Manag. 252 (2022), 115065.
[84] A. Heidari, R. Roshandel, V. Vakiloroaya, An innovative solar assisted desiccant-based evaporative cooling system for co-production of water and cooling in hot and humid climates, Energy Convers. Manag. 185 (2019) 396–409.
[85] R. Tu, Y.H. Hwang, Performance analyses of a new system for water harvesting from moist air that combines multi-stage desiccant wheels and vapor compression cycles, Energy Convers. Manag. 198 (2019).
[86] R. Tu, M.D. Liu, S.Q. Wang, X. Yang, Performance analyses and optimizations of desiccant wheel-assisted atmospheric water harvesting systems based on ideal thermodynamic cycles, Energy Convers. Manag. 245 (2021).
[87] Y. Sheng, L. Fang, L. Zhang, Y.Q. Wang, Aimed at building a healthy living environment: an analysis of performance of Clean-Air Heat Pump system for ammonia removal, Build. Environ. 171 (2020).
[88] Y. Sheng, L. Zhang, Y.Q. Wang, L. Fang, Explore energy saving operation strategy: indoor VOCs removal performance of silica gel rotor in clean-air heat pump system at low regeneration air temperature, Energy Build. (2019) 202.

[89] Y. Sheng, L. Fang, Experimental analysis of the effect of moisture on air cleaning performance of desiccant wheel in a Clean Air Heat Pump, Build. Environ. 147 (2019) 551–558.
[90] Y. Sheng, L. Fang, Y.X. Sun, An experimental evaluation on air purification performance of Clean-Air Heat Pump (CAHP) air cleaner, Build. Environ. 127 (2018) 69–76.
[91] Y. Sheng, L. Fang, Can a Clean-Air Heat Pump (CAHP) maintain air purification capability when using polluted air for regeneration? Build. Environ. 128 (2018) 170–179.