/FPGA_Implement_2026

Arty_S7_50_Master.xdc	原始 constrain file
ClkDiv26Bits.dig	26 位元除頻器電路圖
ClkDiv26Bits.v	26 位元除頻器 .v 檔
ClkDiv26Bits.xdc	26 位元除頻器 constrain file
FPGA_Implement_20260326.pptx	說明檔
Ring4Bits.dig	Ring Counter 電路圖
Ring4Bits.v	Ring Counter. v 檔
Ring4Bits.xdc	Ring Counter constrain file

FPGA configuration: using DIGILENT ARTY S7

Reference:
https://digilent.com/reference/programmable-logic/arty-s7/reference-manual?srsltid=AfmBOorzbXbcaCx2YBEzwtKWQFyjFJ2-ehX9uNFsndON17hN3UM-zHf5

Product Variant	Arty S7-25	Arty S7-50
FPGA Part Number	XC7S25-1CSGA324C	XC7S50-1CSGA324C
Look-up Tables (LUTs)	14,600	32,600
Flip-Flops	29,200	65,200
Block RAM	202.5 KB	337.5 KB
Clock Management Tiles	3	5

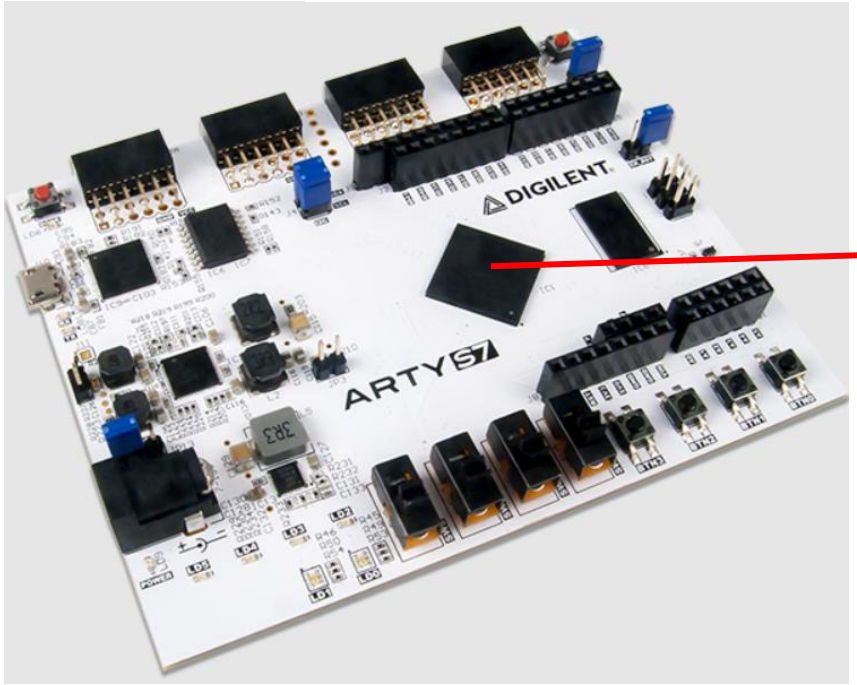

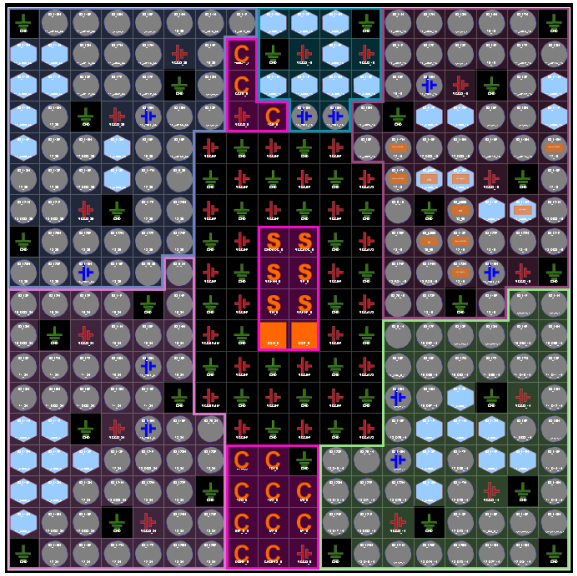

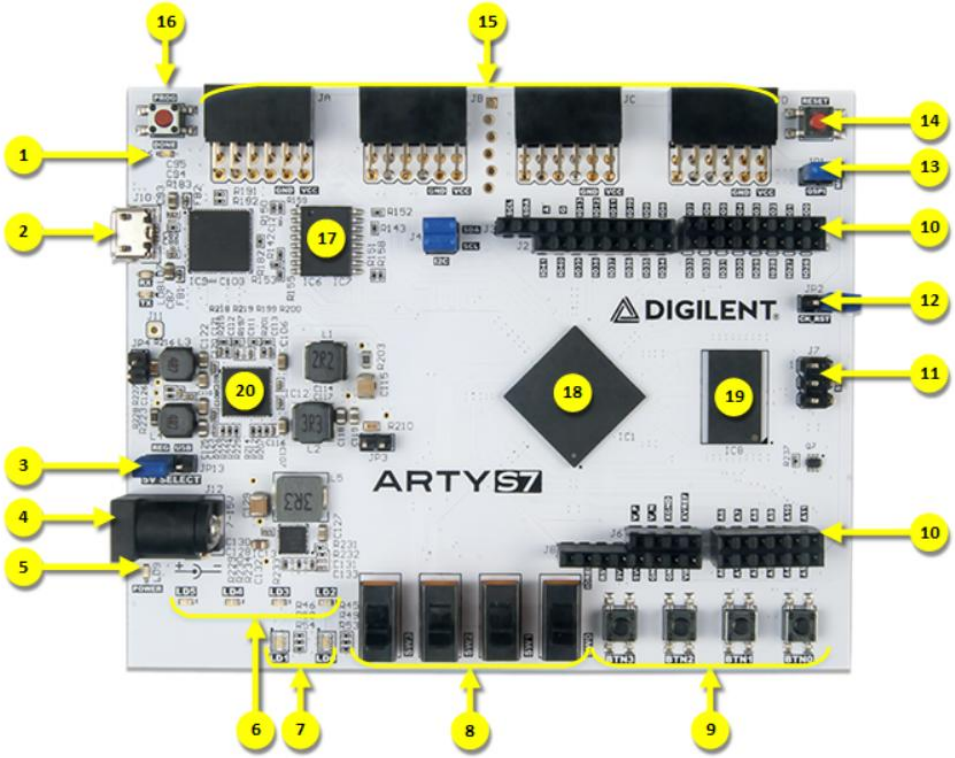

Callout	Description	Callout	Description
1	FPGA programming DONE LED	11	SPI header (Arduino/ChipKIT compatible)
2	Shared USB JTAG / UART port	12	Arduino IDE reset jumper
3	Power select jumper (Ext. supply / USB)	13	FPGA programming mode (JTAG/ Flash)
4	Power jack (for optional ext. supply)	14	Processor reset
5	Power good LED	15	Pmod headers
6	User LEDs	16	FPGA programming reset button
7	User Tri color LEDs	17	SPI Flash
8	User slide switches	18	Spartan-7 FPGA
9	User push buttons	19	DDR3L memory
10	Arduino/ChipKIT shield connectors	20	Analog devices ADP 5052 power supply

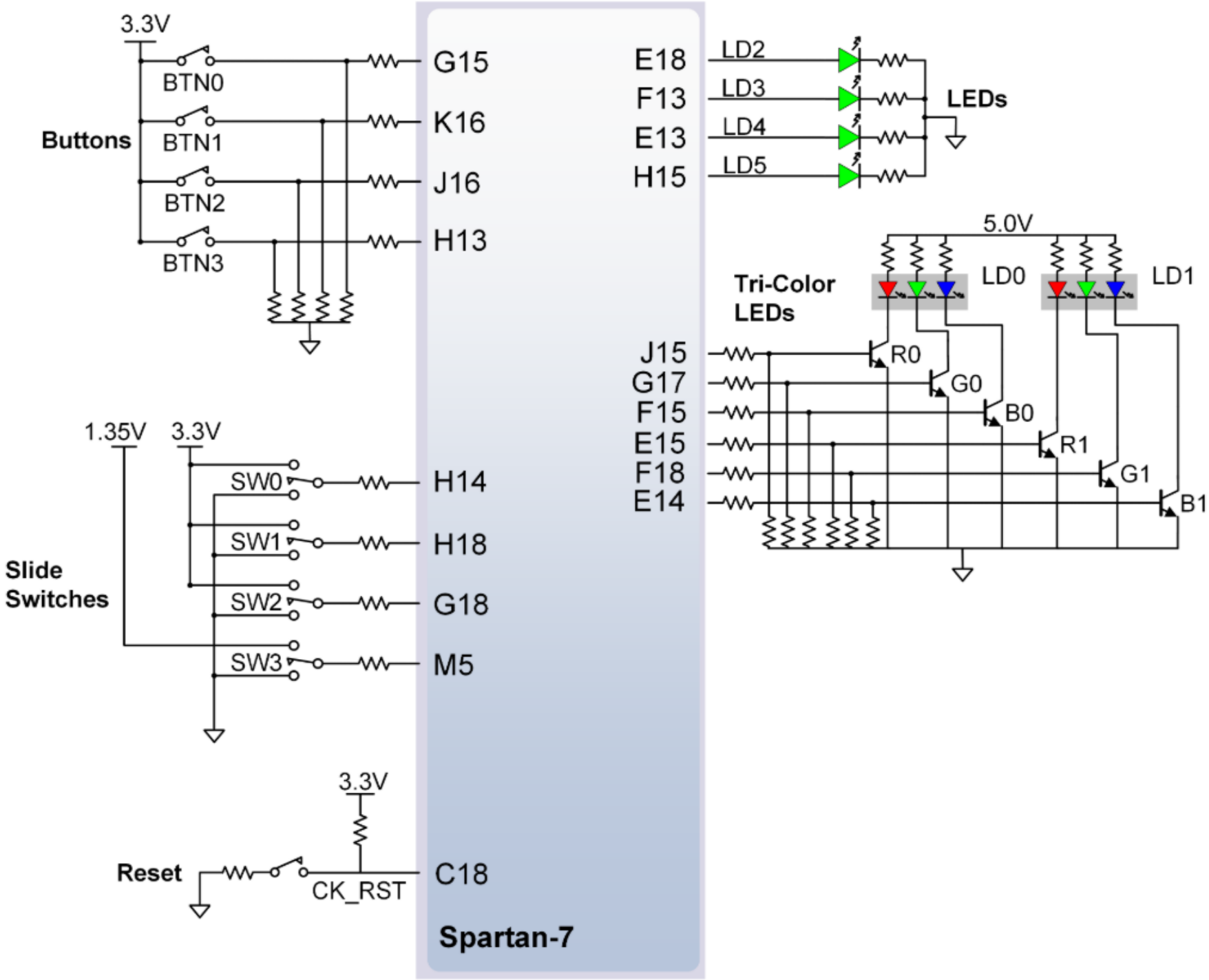
3.3V
BTN0
BTN1
BTN2
BTN3
Buttons
G15
K16
J16
H13
E18
F13
E13
H15
LD2
LD3
LD4
LD5
LEDs
5.0V
Tri-Color LEDs
LD0
LD1
J15
G17
F15
E15
F18
E14
R0
G0
B0
R1
G1
B1
1.35V
3.3V
SW0
SW1
SW2
SW3
Slide Switches
H14
H18
G18
M5
3.3V
Reset
CK_RST
C18
Spartan-7

The Arty S7 board includes:
One 12 MHz crystal oscillator connected to pin F14
One 100 MHz crystal oscillator connected to pin R2

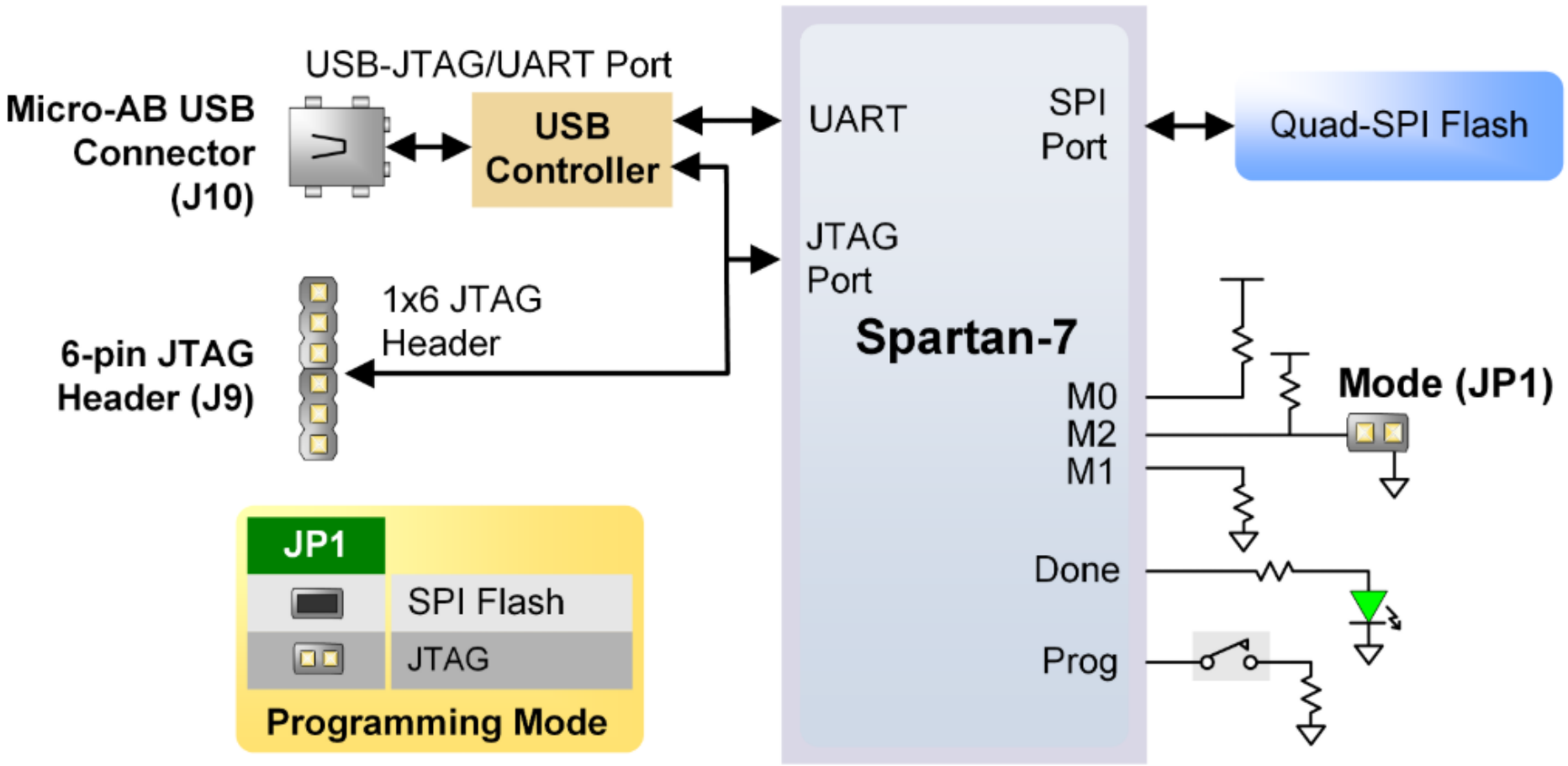

Using “Digital” to construct the circuit schematic:

26bit clock divider, CLK is connected to a 12MHz OSC.

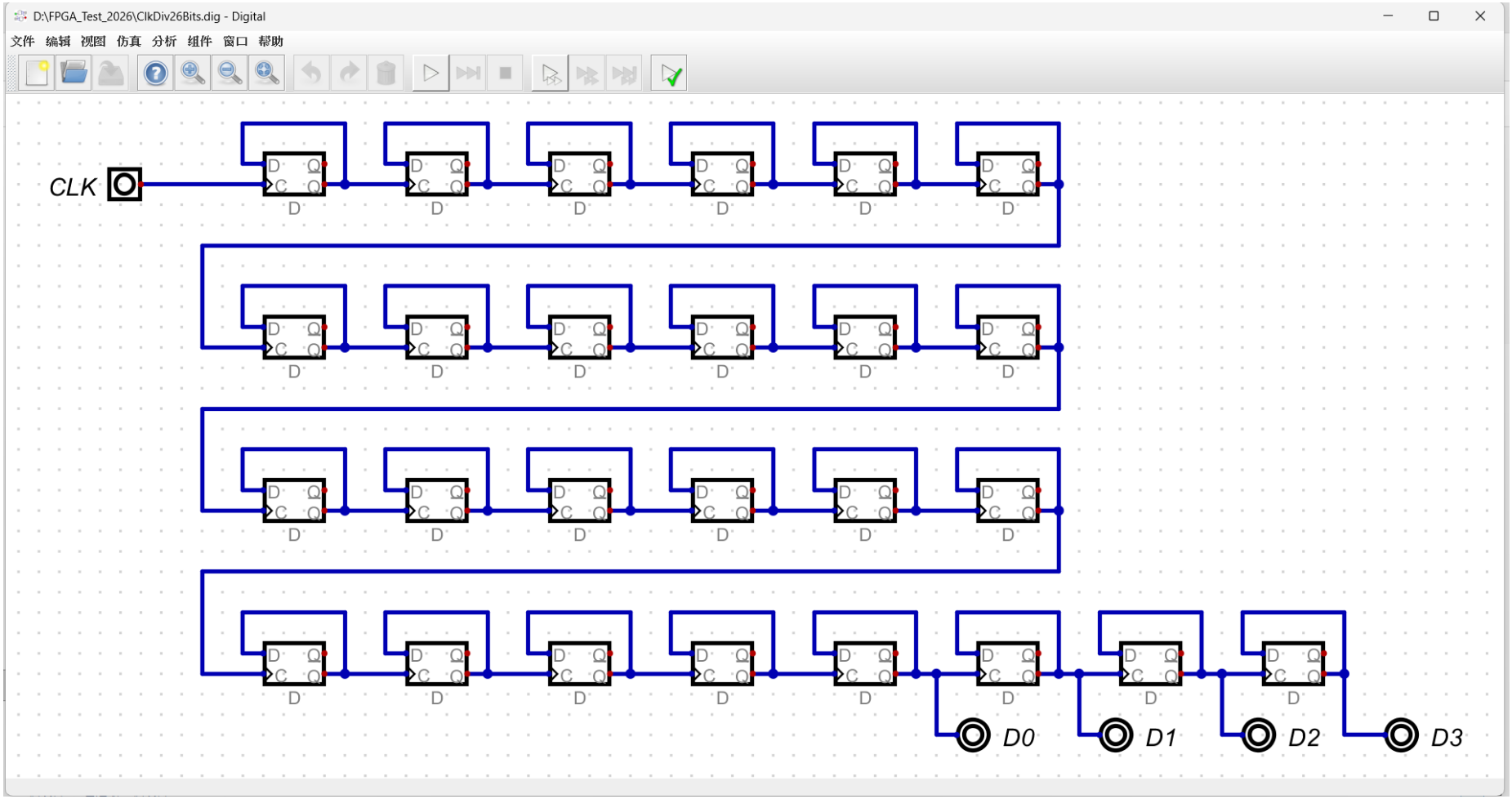

.xdc constrain file for 26-bit clock divider:

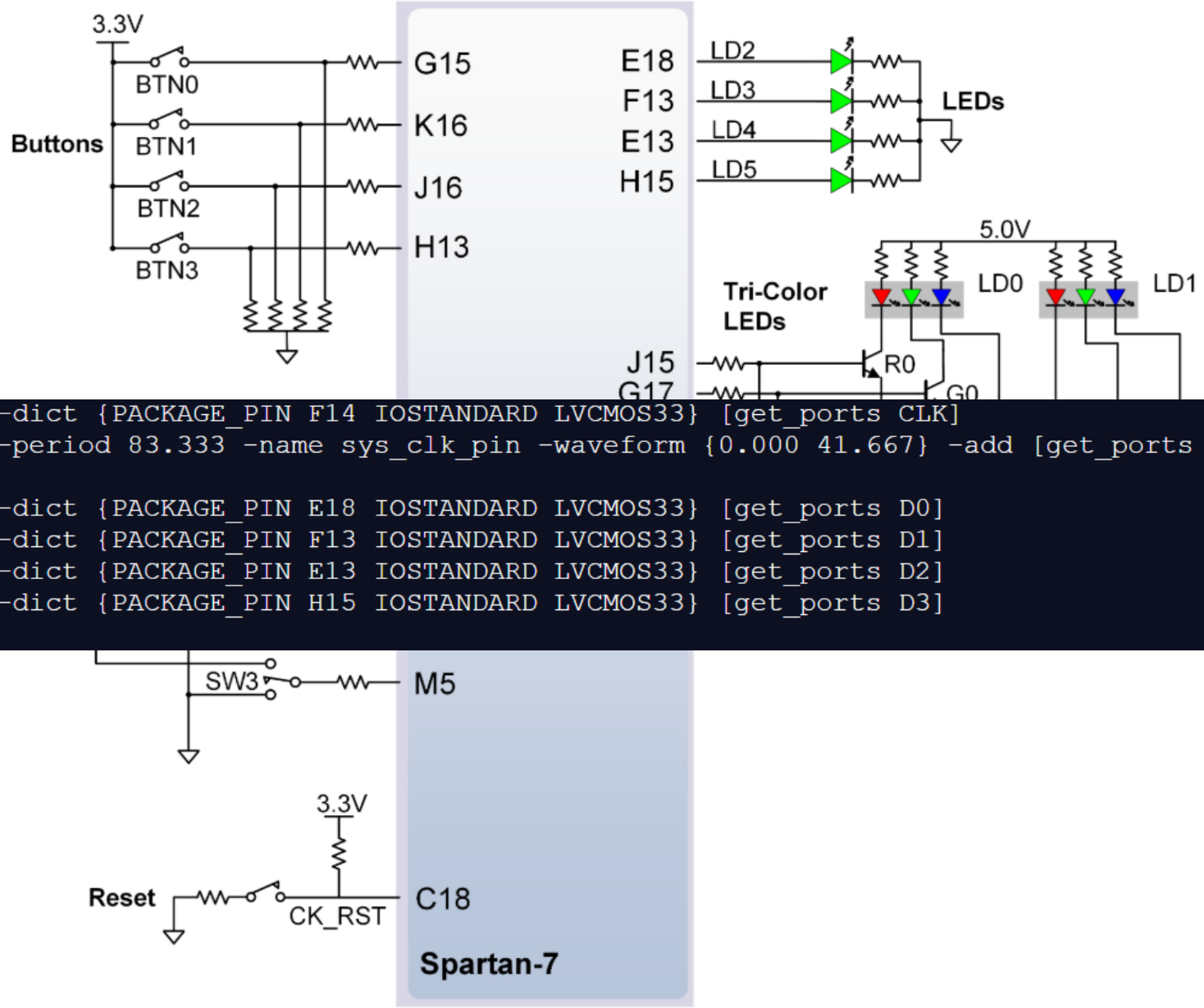


```
set_property -dict {PACKAGE_PIN F14 IOSTANDARD LVCMOS33} [get_ports CLK]
create_clock -period 83.333 -name sys_clk_pin -waveform {0.000 41.667} -add [get_ports CLK]

set_property -dict {PACKAGE_PIN E18 IOSTANDARD LVCMOS33} [get_ports D0]
set_property -dict {PACKAGE_PIN F13 IOSTANDARD LVCMOS33} [get_ports D1]
set_property -dict {PACKAGE_PIN E13 IOSTANDARD LVCMOS33} [get_ports D2]
set_property -dict {PACKAGE_PIN H15 IOSTANDARD LVCMOS33} [get_ports D3]

```

Ring Counter:

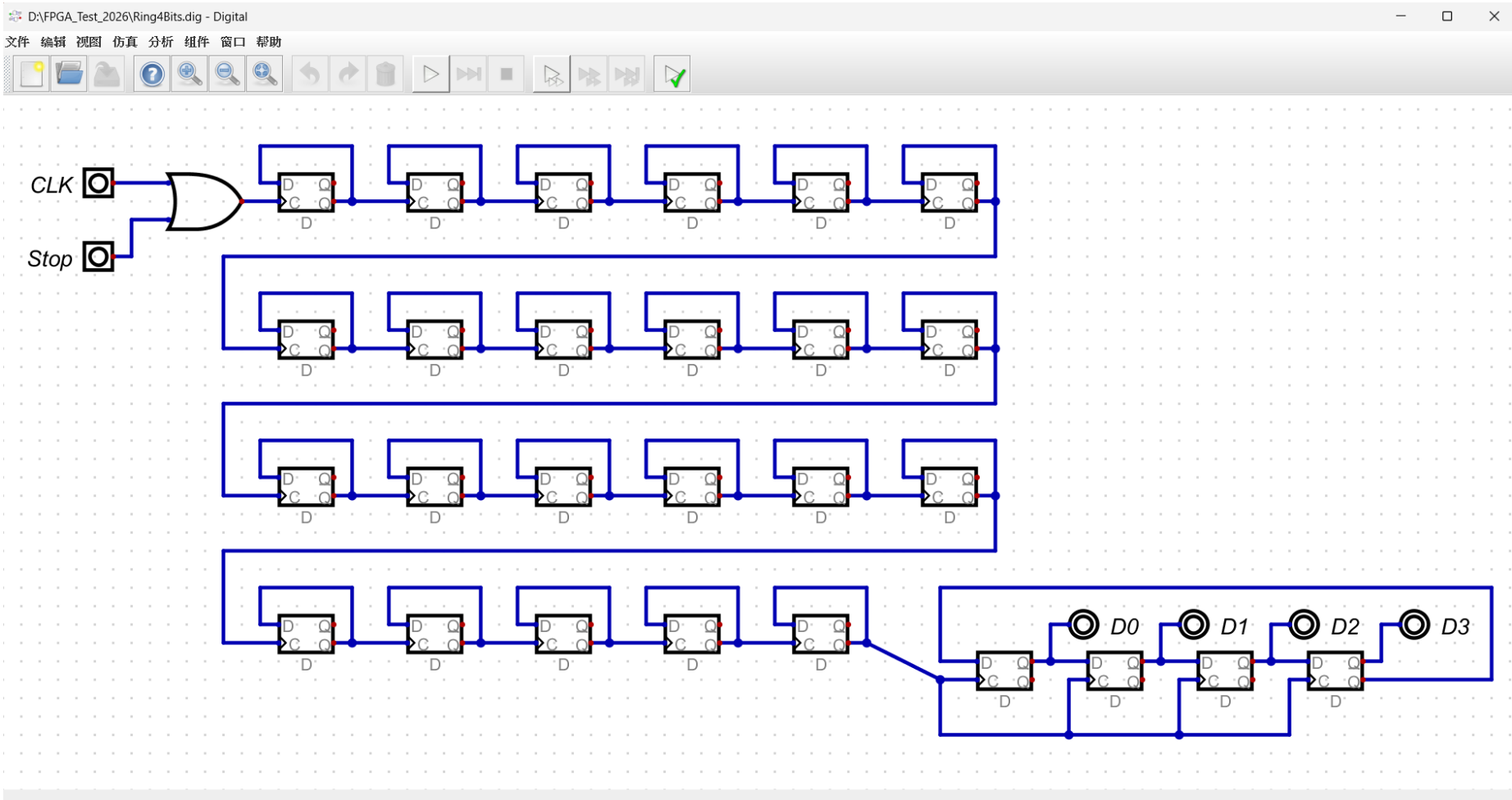

.xdc constrain file for 26-bit clock divider:

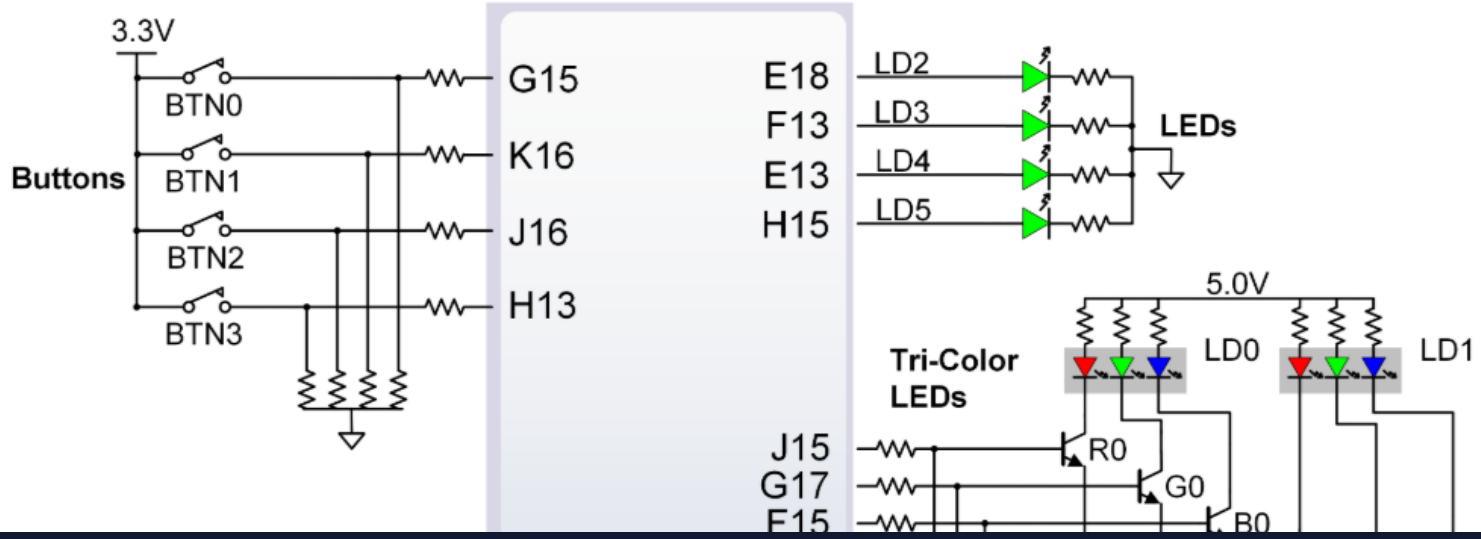


```
set_property -dict {PACKAGE_PIN F14 IOSTANDARD LVCMOS33} [get_ports CLK]
create_clock -period 83.333 -name sys_clk_pin -waveform {0.000 41.667} -add [get_ports CLK]

set_property -dict {PACKAGE_PIN H13 IOSTANDARD LVCMOS33} [get_ports Stop]

set_property -dict {PACKAGE_PIN E18 IOSTANDARD LVCMOS33} [get_ports D0]
set_property -dict {PACKAGE_PIN F13 IOSTANDARD LVCMOS33} [get_ports D1]
set_property -dict {PACKAGE_PIN E13 IOSTANDARD LVCMOS33} [get_ports D2]
set_property -dict {PACKAGE_PIN H15 IOSTANDARD LVCMOS33} [get_ports D3]

```

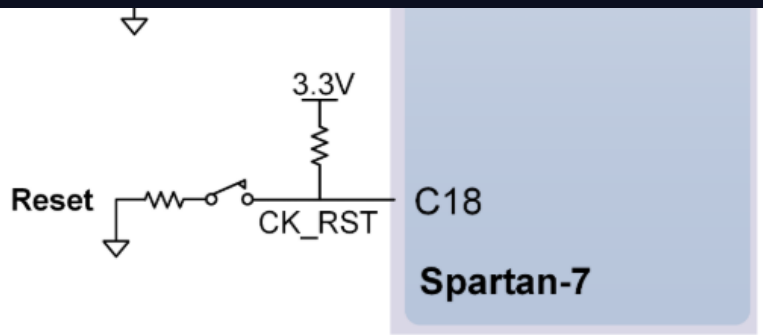

Flow Tools Window Help Quick Access

VIVADO HLx Editions

Quick Start

Create Project >
Open Project >
Open Example Project >

Tasks

Manage IP >
Open Hardware Manager
Xilinx Tcl Store >

Learning Ce

Documentation and Tutoria
Quick Take Videos >
Release Notes Guide >

New Project

Add Sources

Specify HDL, netlist, Block D
file on disk and add it to your

Add Files | Add Directories | Create File

Scan and add RTL include files into project
Copy sources into project
Add sources from subdirectories

Target language: Verilog Simulator language: Mixed

< Back | Next > | Finish | Cancel

Add Source Files

Look in: FPGA_Implement_2026

project_1
ClkDiv26Bits.v
Ring4Bits.v

Recent Directories

C:/Users/Administrator/Desktop/Classes/NTOU_20260201/V...

File Preview

```
/*
 * Generated by Digital. Don't modify this file!
 * Any changes will be lost if this file is regenerated.
 */
module DIG_D_FF_1bit
#(
    parameter Default = 0
)
```

File name: ClkDiv26Bits.v

Files of type: Design Source Files (.vhd, vhdl, vhf, vhdp, vho, v, vf, verilog, vr, vg, vb, tf, vlog, vp, vm, veo, svo, vh

Add *.v file for circuit

OK | Cancel

VIVADO
HLx Editions

Quick Start

Create Project >
Open Project >
Open Example Project >

Tasks

Manage IP >
Open Hardware Manager
Xilinx Tcl Store >

Learning Ce

Documentation and Tutoria
Quick Take Videos >
Release Notes Guide >

New Project

Add Sources

Specify HDL, netlist, Block Design, and IP files, or directories containing those files, to add to your project. Create a new source file on disk and add it to your project. You can also add and create sources later.

	Index	Name	Library	HDL Source For	Location
	1	ClkDiv26Bits.v	xil_defaultlib	Synthesis & Simulation	C:/Users/Administrator/Desktop/Classe

Add Files | Add Directories | Create File

- [ ] Scan and add RTL include files into project
- [ ] Copy sources into project
- [x] Add sources from subdirectories

Target language: Verilog Simulator language: Mixed

< Back | Next > | Finish | Cancel

File Flow Tools Window Help Q- Quick Access

VIVADO HLx Editions

Quick Start

Create Project >
Open Project >
Open Example Project >

Tasks

Manage IP >
Open Hardware Manager
Xilinx Tcl Store >

Learning Ce

Documentation and Tutoria
Quick Take Videos >
Release Notes Guide >

New Project

Add Constraints (optional)

Specify or create constraint files for phys

Add Files | Create File

Copy constraints files into project

? | < Back | Next > | Finish | Cancel

Add *.xdc file for constraint

Add Constraint Files

Look in: FPGA_Implement_2026

- project_1
- Arty_S7_50_Master.xdc
- ClkDiv26Bits.xdc
- Ring4Bits.xdc

Recent Directories

C:/Users/Administrator/Desktop/Classes/NTOU_20260201/V...

File Preview

```
set_property -dict {PACKAGE_PIN F14 IOSTANDARD LVCMOS33} [get_po
create_clock -period 83.333 -name sys_clk_pin -waveform {0.000 41

set_property -dict {PACKAGE_PIN E18 IOSTANDARD LVCMOS33} [get_po
set_property -dict {PACKAGE_PIN F13 IOSTANDARD LVCMOS33} [get_po
set_property -dict {PACKAGE_PIN E13 IOSTANDARD LVCMOS33} [get_po
set_property -dict {PACKAGE_PIN H15 IOSTANDARD LVCMOS33} [get_po
```

File name: ClkDiv26Bits.xdc

Files of type: Design Constraint Files (.sdc, xdc)

OK | Cancel

project_2
C:/Users/Administrato

project_1
C:/Users/Administrato

project_1
C:/Users/Administrato

VIVADO
HLx Editions

Quick Start

Create Project >
Open Project >
Open Example Project >

Tasks

Manage IP >
Open Hardware Manager
Xilinx Tcl Store >

Learning Ce

Documentation and Tutoria
Quick Take Videos >
Release Notes Guide >

New Project

Add Constraints (optional)

Specify or create constraint files for physical and timing constraints.

Constraint File	Location
ClkDiv26Bits.xdc	C:\Users\Administrator\Desktop\Classes\NTOU_20260201\VerilogAndFPGA\W5\FPGA_Implement_2026

Add Files Create File

☐ Copy constraints files into project

? < Back Next > Finish Cancel

VIVADO
HLx Editions

Select FPGA type as xc7s50csga324-1 or xc7s50csga324-1

Quick Start

Create Project >
Open Project >
Open Example Project >

Tasks

Manage IP >
Open Hardware Manager >
Xilinx Tcl Store >

Learning Ce

Documentation and Tutoria
Quick Take Videos >
Release Notes Guide >

New Project

Default Part

Choose a default Xilinx part or board for your project.

Quick search using "Spartan-7" and "csga324"

Parts | Boards

Reset All Filters

Category: All
Family: Spartan-7
Package: csga324
Speed: All Remaining
Temperature: All Remaining
Static power: All Remaining

Search: Q-

Part	I/O Pin Count	Available IOBs	LUT Elements	FlipFlops	Block RAMs	Ultra RAMs	DSPs	Gt
xc7s25csga324-2	324	150	14600	29200	45	0	80	0
xc7s25csga324-1	324	150	14600	29200	45	0	80	0
xc7s25csga324-1IL	324	150	14600	29200	45	0	80	0
xc7s25csga324-1Q	324	150	14600	29200	45	0	80	0
xc7s50csga324-2	324	210	32600	65200	75	0	120	0
xc7s50csga324-1	324	210	32600	65200	75	0	120	0
xc7s50csga324-1IL	324	210	32600	65200	75	0	120	0
xc7s50csga324-1Q	324	210	32600	65200	75	0	120	0

< Back | Next > | Finish | Cancel

File Edit Flow Tools Reports Window Layout View Help Quick Access

Flow Navigator

PROJECT MANAGER - project_1

PROJECT MANAGER
- Settings
- Add Sources
- Language Templates
- IP Catalog

IP INTEGRATOR
- Create Block Design
- Open Block Design
- Generate Block

SIMULATION
- Run Simulation

RTL ANALYSIS
- Open Elaborated Design

SYNTHESIS

Sources

Design Sources (1)
- ClkDiv26Bits (ClkDiv26Bits.v) (26)

Constraints (1)
- constrs_1 (1)
  - ClkDiv26Bits.xdc

Simulation Sources (1)

Utility Sources

Hierarchy Libraries Compile Order

Properties

Project Summa

Overview | D

Settings Ed

Project name:

Project locatio

Product family

Project part:

Top module n

get langua

ulator lang

Synthesis

Status:

Messages:

Part:

Strategy:

Report Strateg

Incremental s

The constraint file can be found in the "Sources"

Run Implementation:
PROGRAM AND DEBUG >> Generate Bitstream

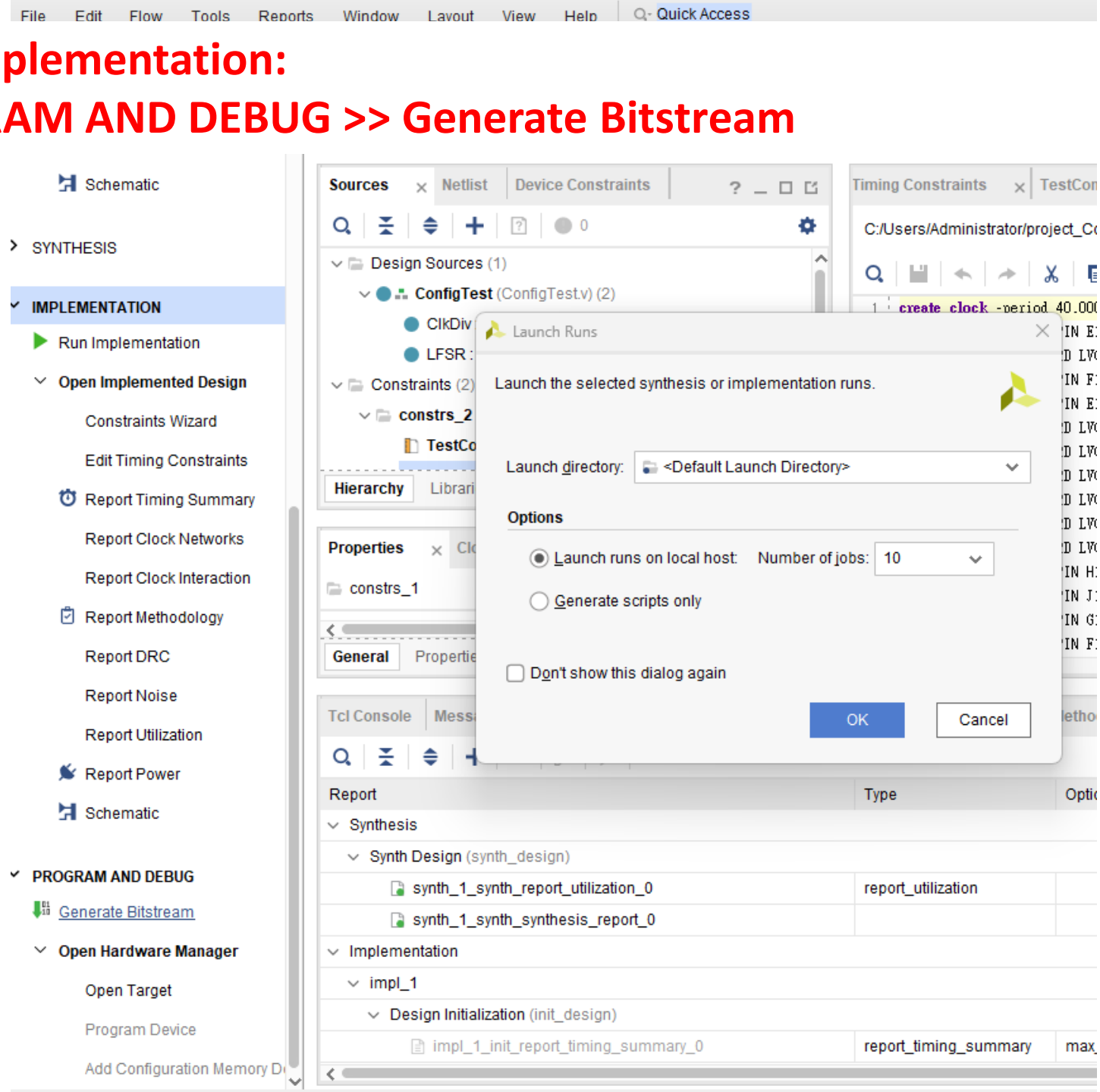

Connect the develop board via USB wire, and Open Hardware Manager >> Open Target >> Auto Connected

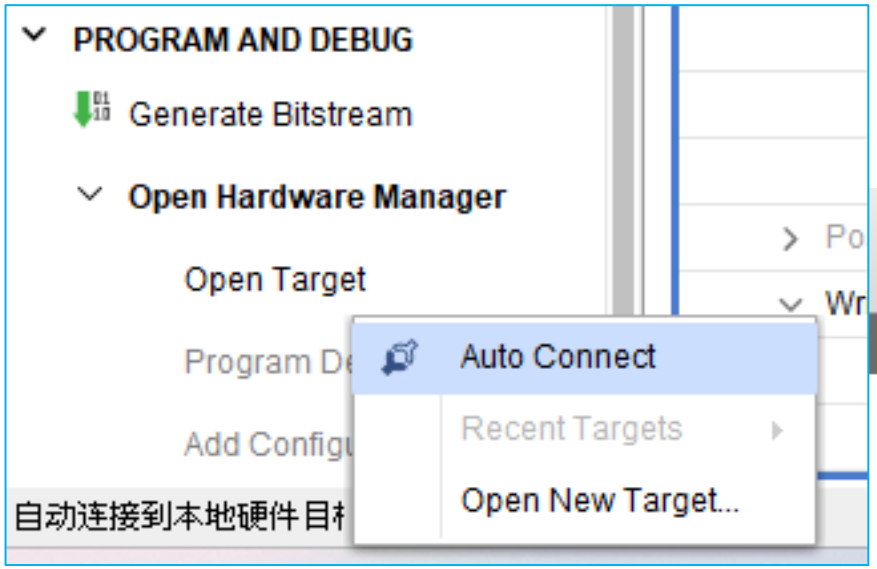

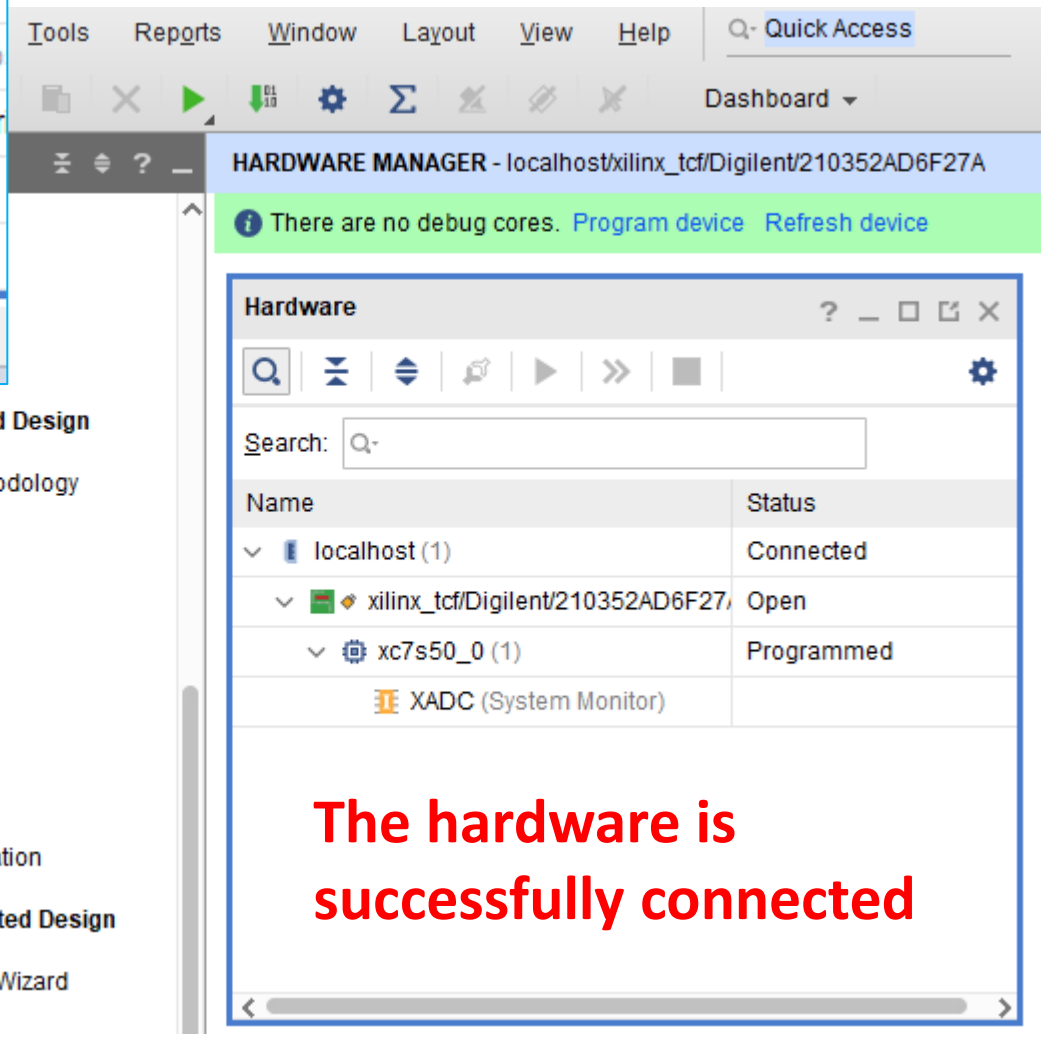

The hardware is successfully connected

Program Device

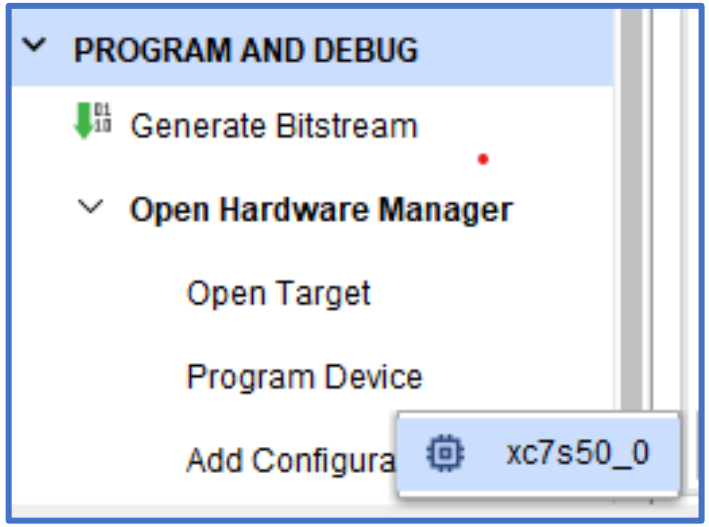

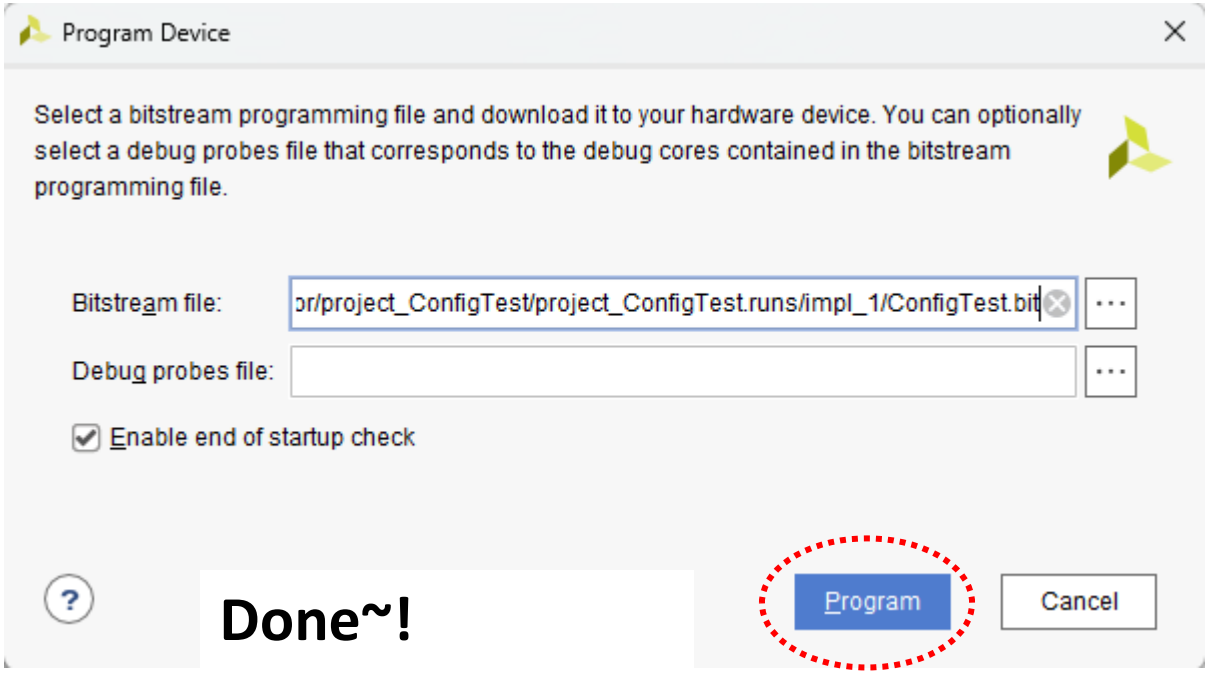

Done~!

Ball Grid Array package: (BGA)

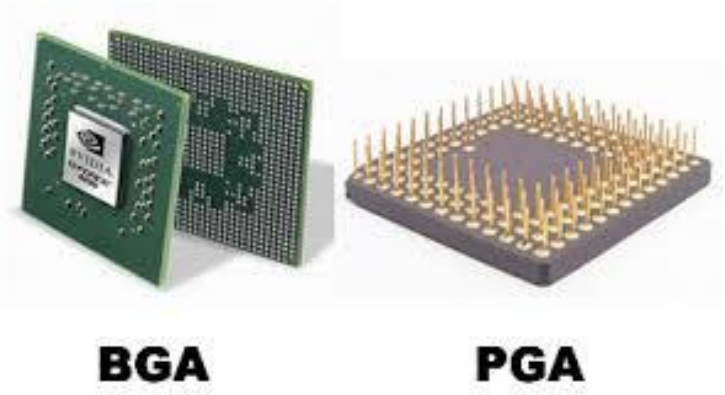

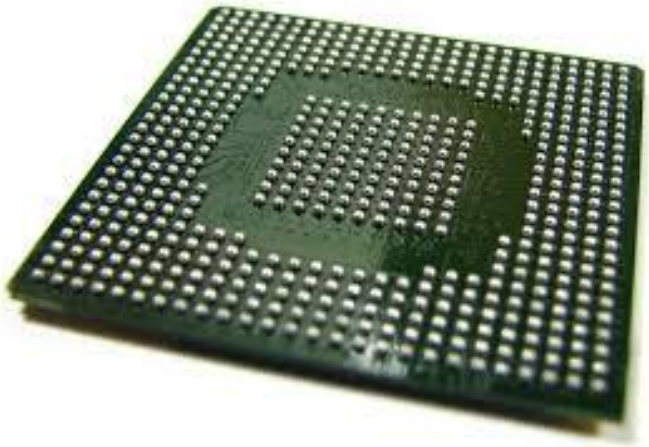

Dual In-line Package (DIP)

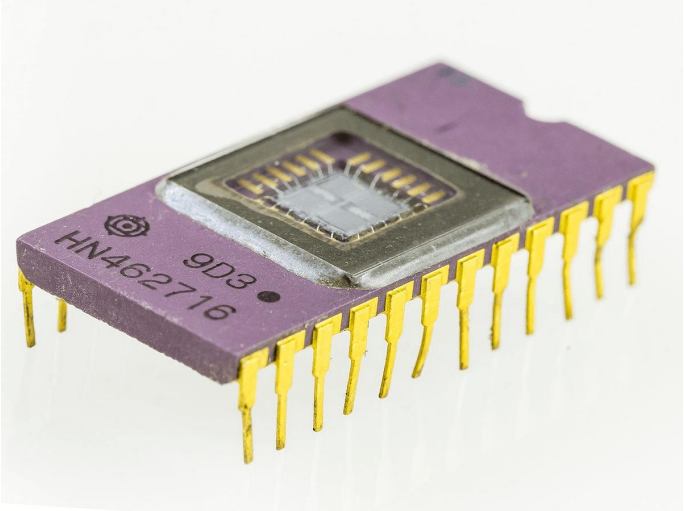

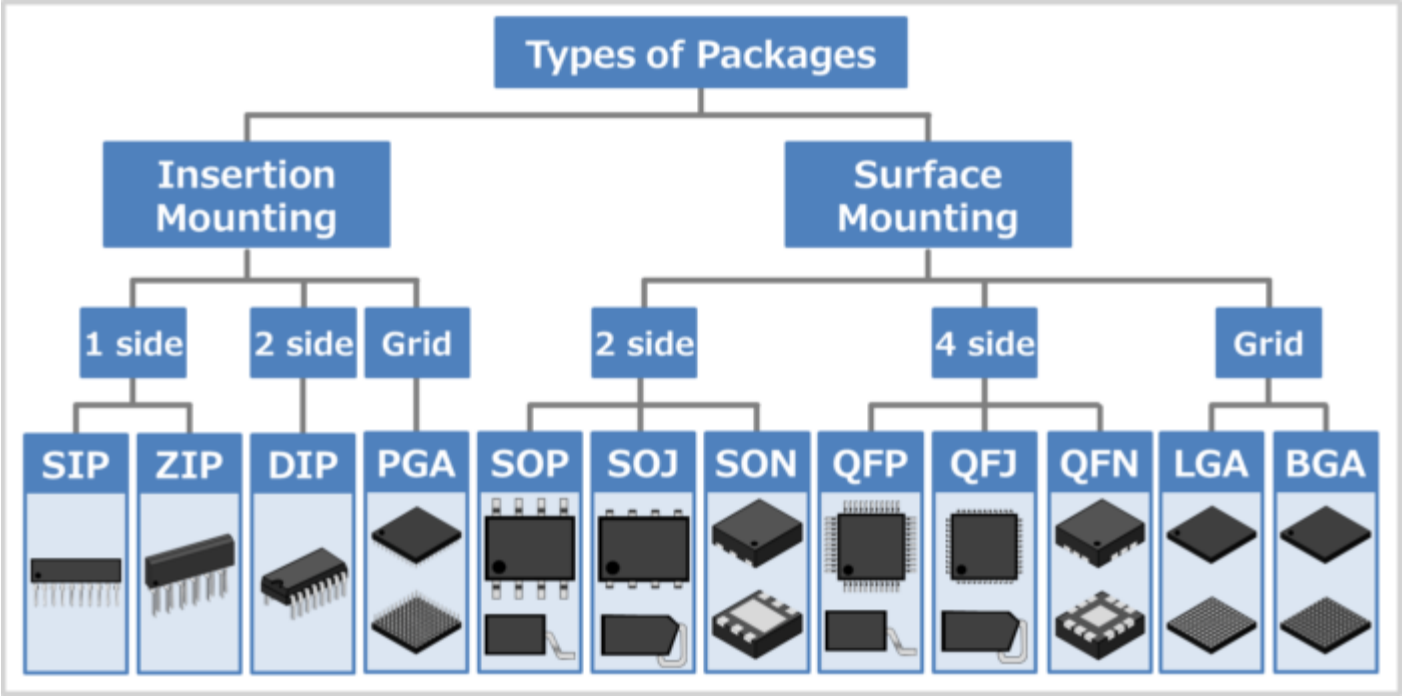
Types of Packages
Insertion Mounting
Surface Mounting
1 side
2 side
Grid
2 side
4 side
Grid
SIP
ZIP
DIP
PGA
SOP
SOJ
SON
QFP
QFJ
QFN
LGA
BGA

BGA
DIP
QFN
QFP
SOP
SOP
SOT23
SOT223