第二次作業(2026/03/19)

學號: 0136C008　　姓名:涂名恩

1. 以 data flow model 或 behavior model 設計一個計數器，能重複數出自己的學號。(18%)

```
`timescale 1ns / 1ps
module Counter_OK(clk, rst, CountOut, IdOut
input clk, rst;
output [2:0] CountOut;
output [3:0] IdOut;

reg [2:0] CountOut;
reg [3:0] IdOut;

always @(*) begin
    case (CountOut)
        3'b000: IdOut = 4'h0;
        3'b001: IdOut = 4'h1;
        3'b010: IdOut = #2 4'h3;
        3'b011: IdOut = 4'h6;
        3'b100: IdOut = #5 4'hC;
        3'b101: IdOut = 4'h0;
        3'b110: IdOut = 4'h0;
        3'b111: IdOut = 4'h8;
        default: IdOut = 4'bxxxx;
    endcase
end

always @(posedge rst or posedge clk) begin
    if( (rst == 1'b1)) begin
        CountOut <= 3'b000;
    end
    else begin
        CountOut <= CountOut + 1'b1;
        if (CountOut==3'b111) begin
            CountOut <= 3'b000;
        end
    end
end

endmodule
```

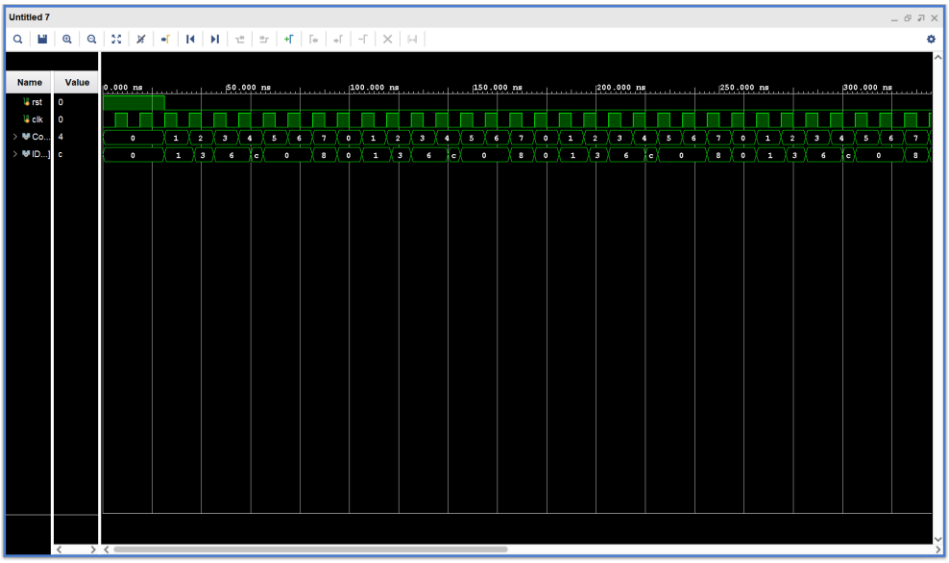

2. 修改計數器(存成另一個版本)，使它數完學號能暫停。(18%)

```
`timescale 1ns / 1ps
module Counter_GG(clk, rst, CountOut, IdOut);
input clk, rst;
output [2:0] CountOut;
output [3:0] IdOut;

reg [2:0] CountOut;
reg [3:0] IdOut;

always @(*) begin
    case (CountOut)
        3'b000: IdOut = 4'h0;
        3'b001: IdOut = 4'h1;
        3'b010: IdOut = 4'h3;
        3'b011: IdOut = 4'h6;
        3'b100: IdOut = 4'hC;
        3'b101: IdOut = 4'h0;
        3'b110: IdOut = 4'h0;
        3'b111: IdOut = 4'h8;
        default: IdOut = 4'bxxxx;
    endcase
end

initial begin
        CountOut = 3'b000;
 #30    CountOut = 3'b000;
 #30    CountOut = 3'b001;
 #30    CountOut = 3'b010;
 #30    CountOut = 3'b011;
 #30    CountOut = 3'b100;
 #30    CountOut = 3'b101;
 #30    CountOut = 3'b110;
 #30    CountOut = 3'b111;
 #30    $stop;
end

endmodule
```

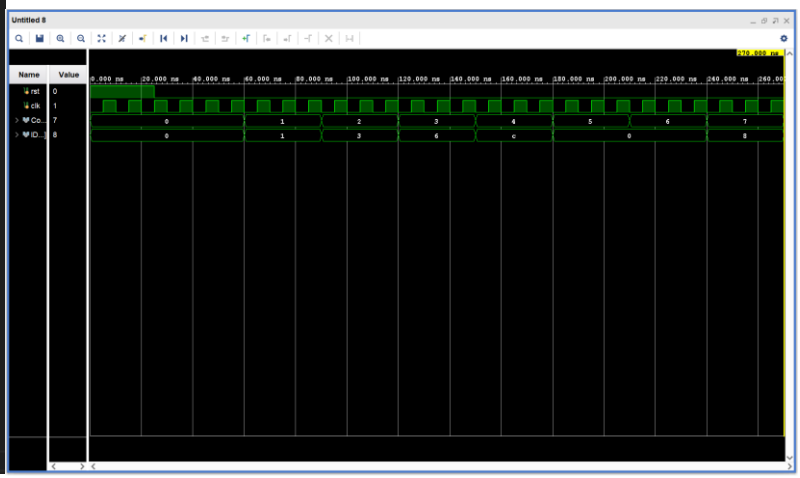

3. 以 vivado 中的 RTL Analysis 進行兩個計數器的 elaborate design，並貼上電路連線的截圖。(18%)

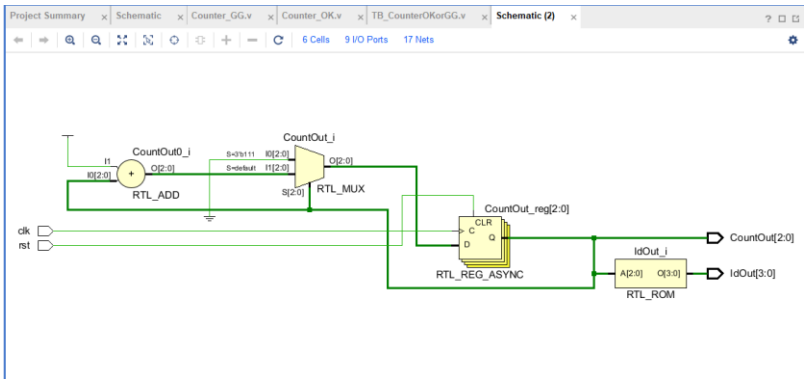

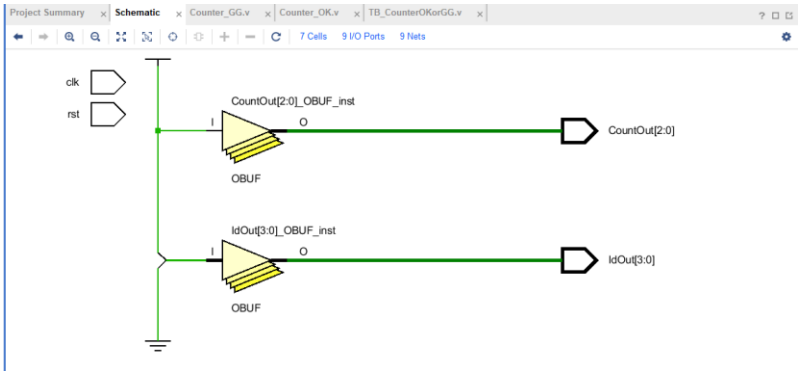

4. 在 vivado 中完成前兩個計數器的 Behavioral Simulation，確認功能正確，並貼上模擬波形的截圖。(18%)

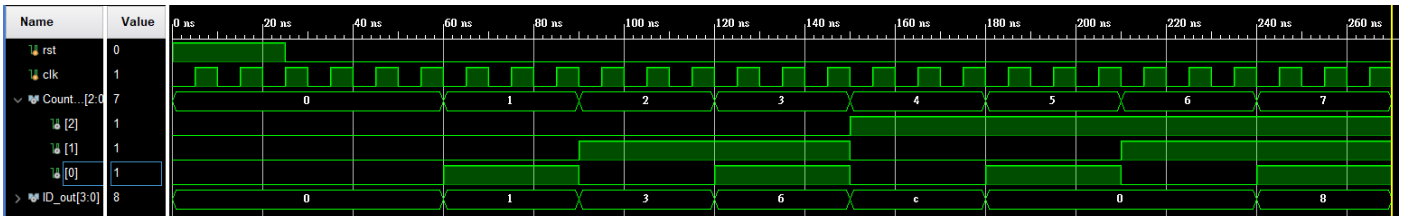

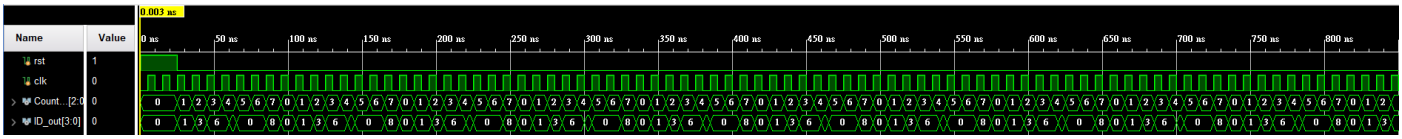

5. 對兩個計數器都進行 implementation, 並說明電路中使用的暫存器數目是否符合預期。(18%)

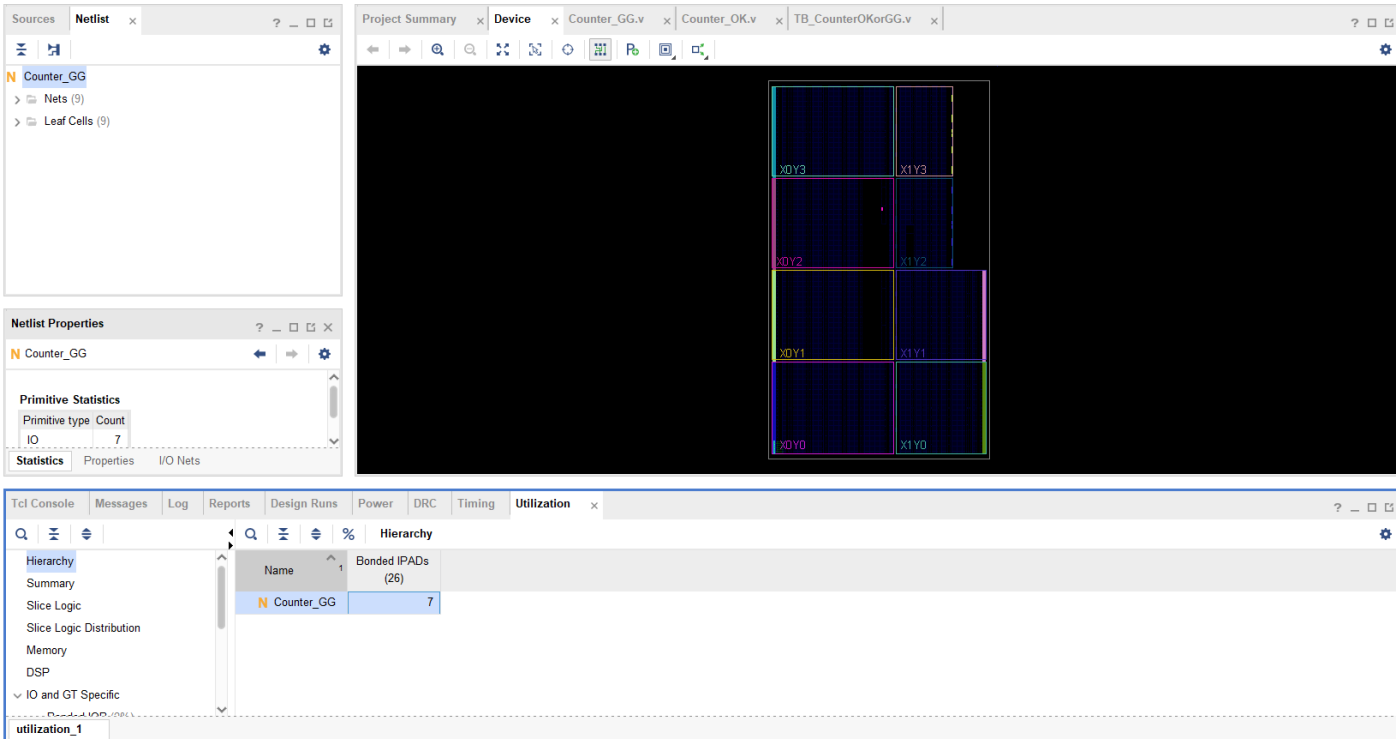

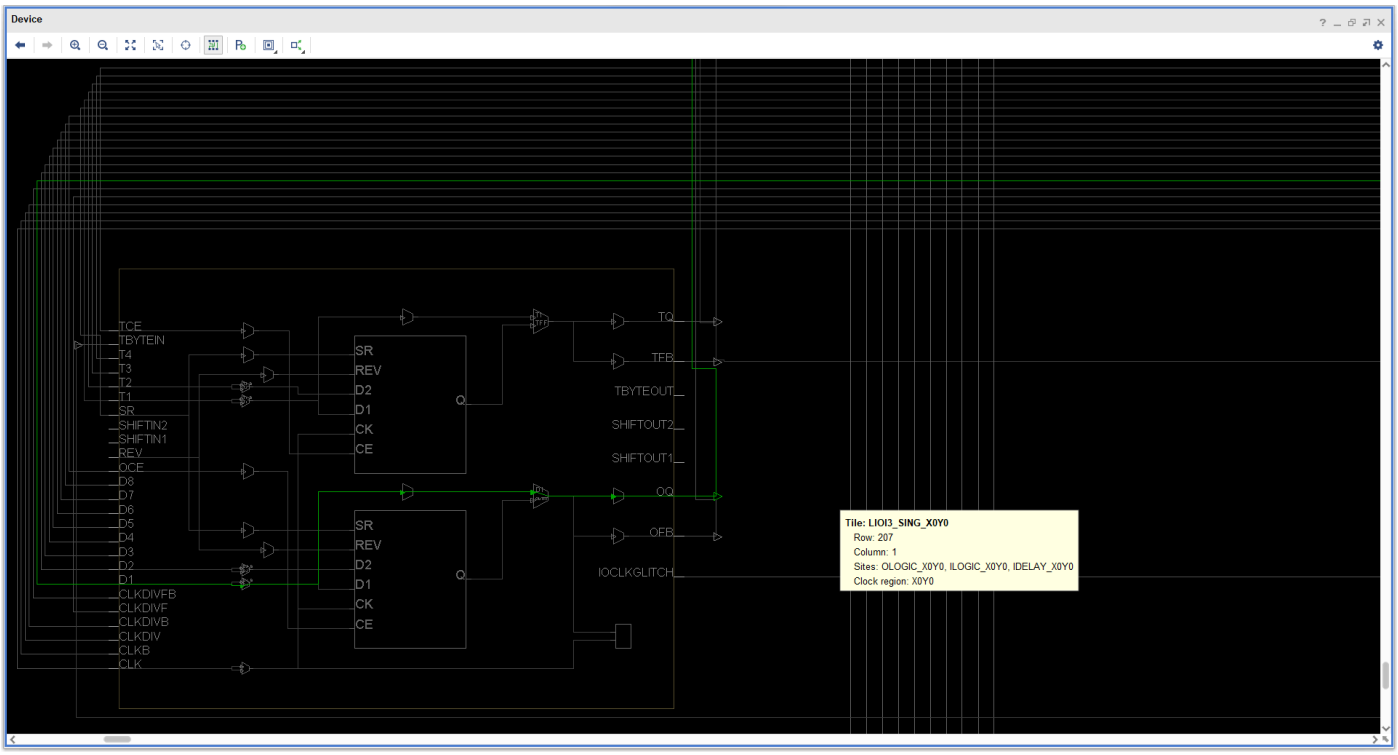

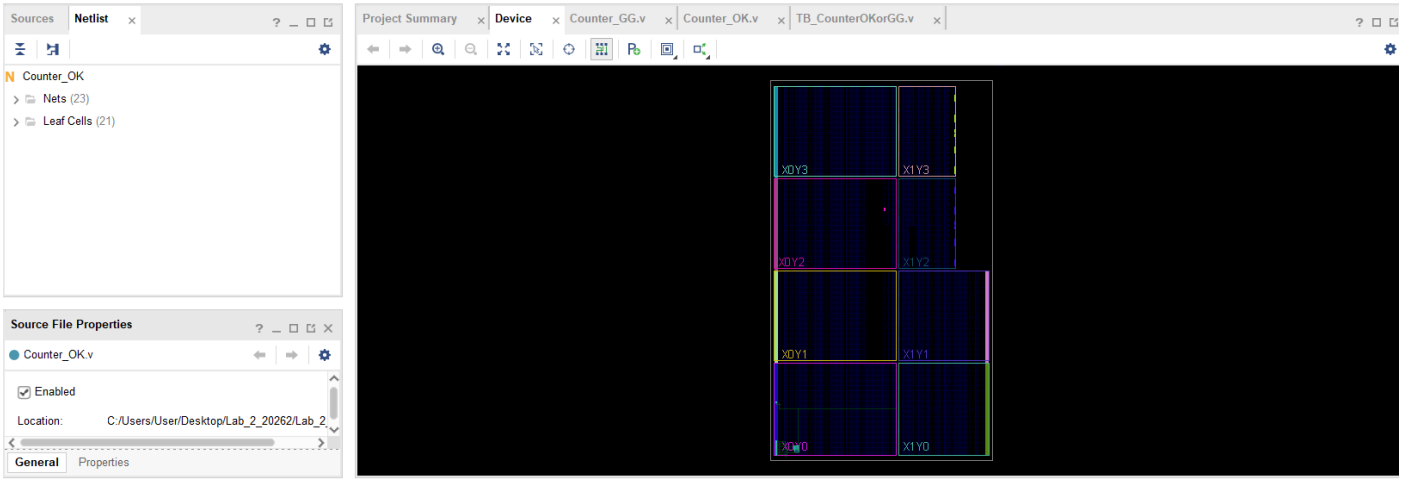

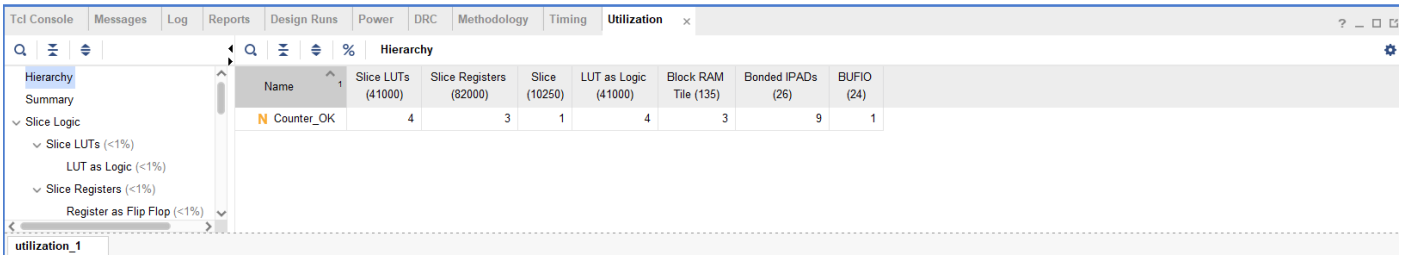

Name	Slice LUTs (41000)	Slice Registers (82000)	Slice (10250)	LUT as Logic (41000)	Block RAM Tile (135)	Bonded IPADs (26)	BUFIO (24)
Counter_OK	4	3	1	4	3	9	1

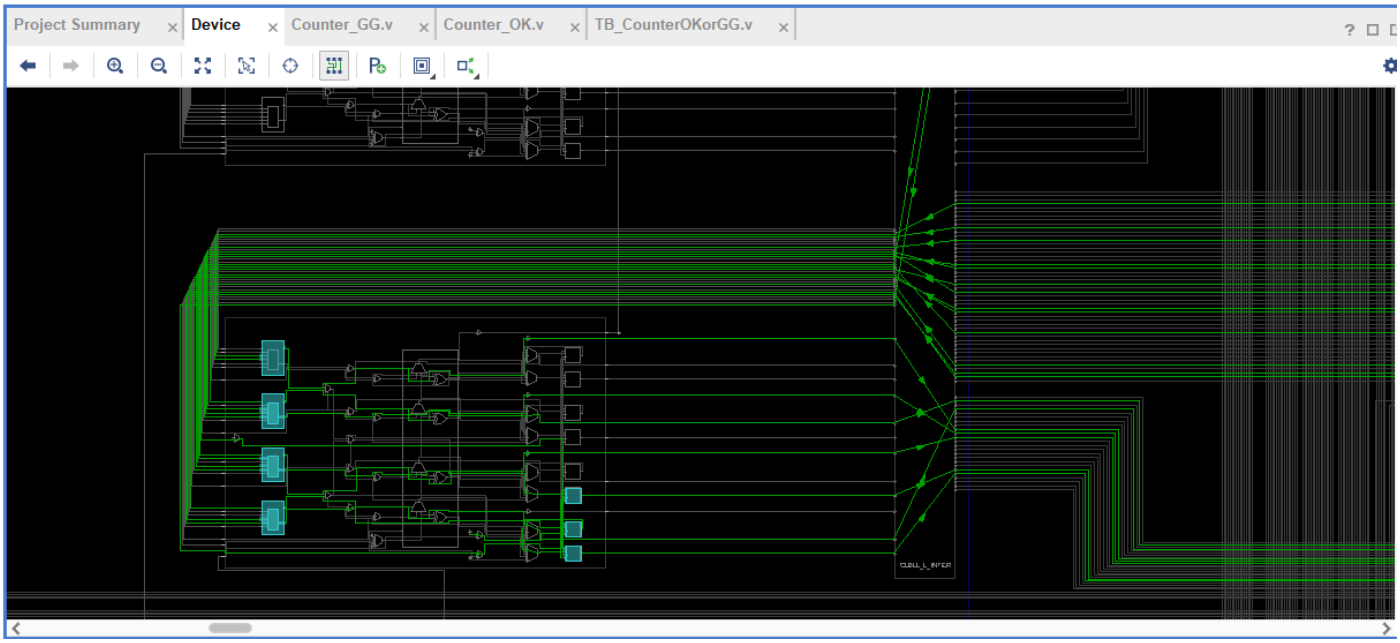

報告中完成以上所有項目可得 90 分。進行額外模擬，比較 Synthesizable 語法，設計更多功能的計數器，記錄除錯過程可再加 10 分。

新增功能：倒數學號與暫停

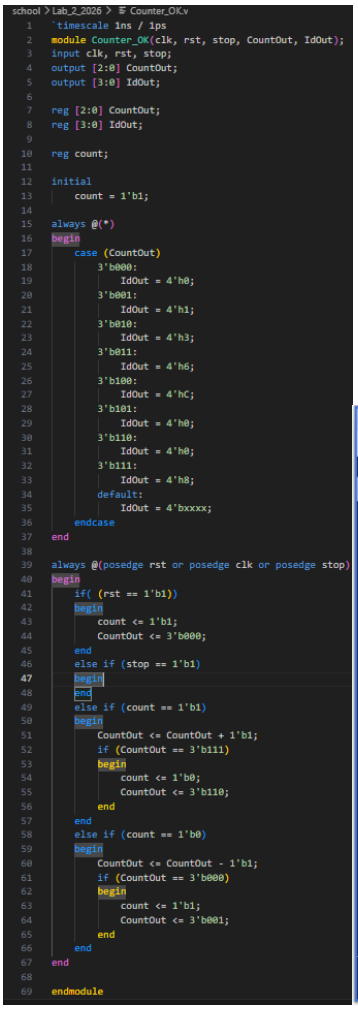
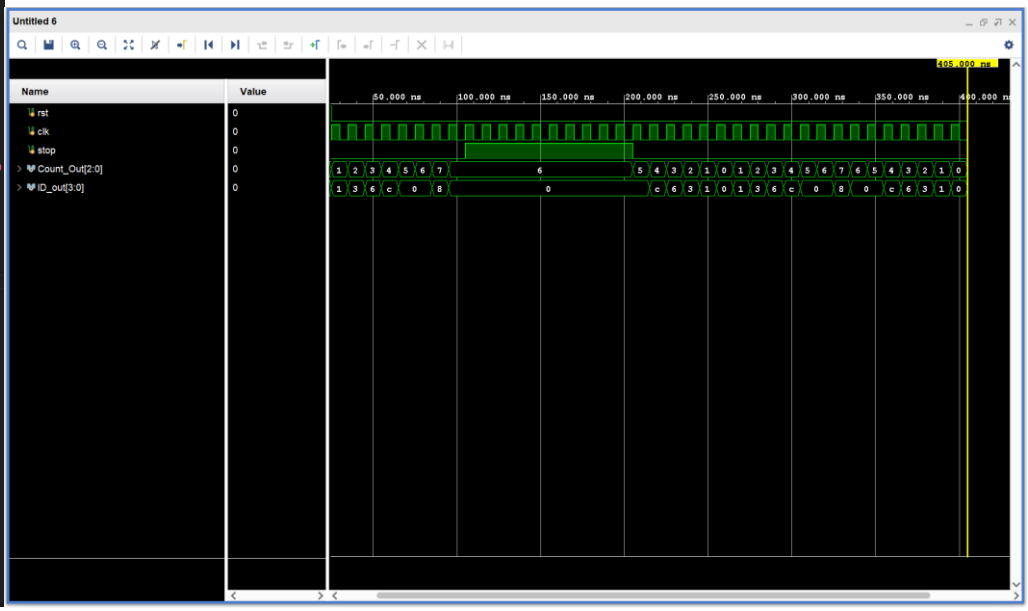
```
school > Lab_2_2026 > Counter_OK.v
1  `timescale 1ns / 1ps
2  module Counter_OK(clk, rst, stop, CountOut, IdOut);
3  input clk, rst, stop;
4  output [2:0] CountOut;
5  output [3:0] IdOut;
6
7  reg [2:0] CountOut;
8  reg [3:0] IdOut;
9
10 reg count;
11
12 initial
13     count = 1'b1;
14
15 always @(*)
16 begin
17     case (CountOut)
18         3'b000:
19             IdOut = 4'h0;
20         3'b001:
21             IdOut = 4'h1;
22         3'b010:
23             IdOut = 4'h3;
24         3'b011:
25             IdOut = 4'h6;
26         3'b100:
27             IdOut = 4'hC;
28         3'b101:
29             IdOut = 4'h0;
30         3'b110:
31             IdOut = 4'h0;
32         3'b111:
33             IdOut = 4'h8;
34         default:
35             IdOut = 4'bxxxx;
36     endcase
37 end
38
39 always @(posedge rst or posedge clk or posedge stop)
40 begin
41     if( (rst == 1'b1))
42     begin
43         count <= 1'b1;
44         CountOut <= 3'b000;
45     end
46     else if (stop == 1'b1)
47     begin
48     end
49     else if (count == 1'b1)
50     begin
51         CountOut <= CountOut + 1'b1;
52         if (CountOut == 3'b111)
53         begin
54             count <= 1'b0;
55             CountOut <= 3'b110;
56         end
57     end
58     else if (count == 1'b0)
59     begin
60         CountOut <= CountOut - 1'b1;
61         if (CountOut == 3'b000)
62         begin
63             count <= 1'b1;
64             CountOut <= 3'b001;
65         end
66     end
67 end
68
69 endmodule
```