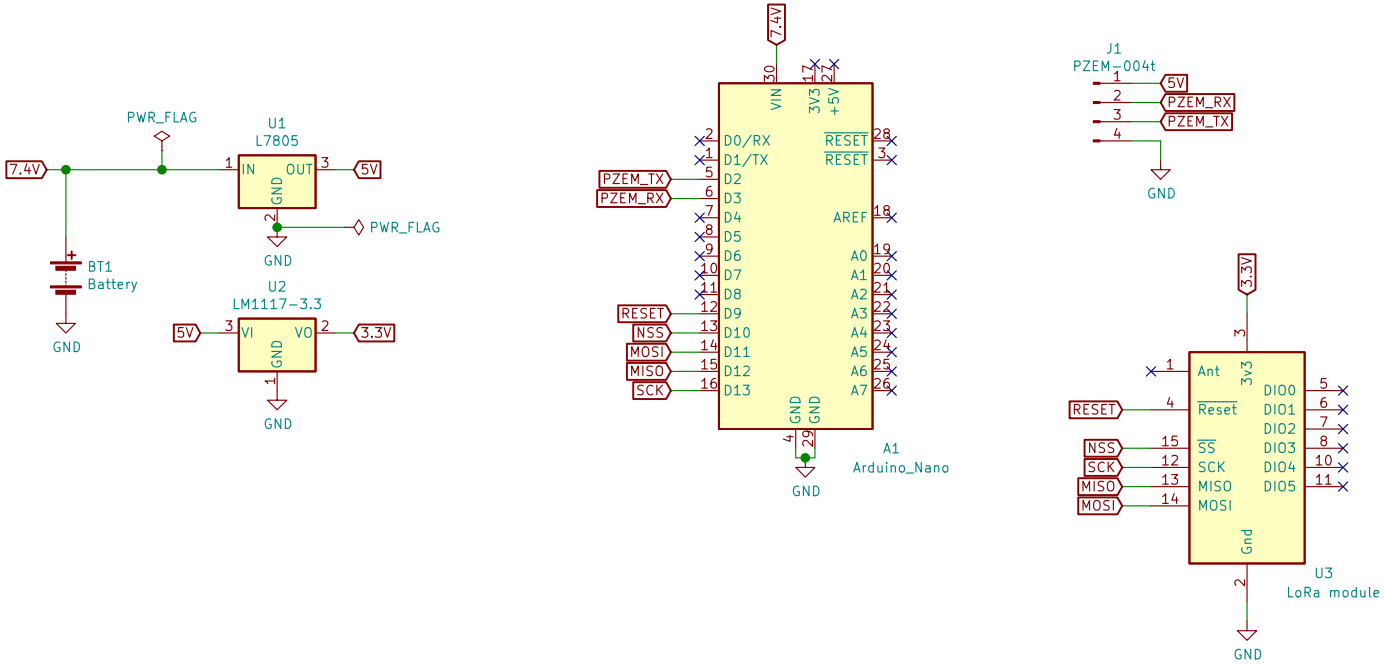

Sheet: /
File: Node.sch

Title: Node Schematic

Size: A4	Date: 18th February, 2023	**Rev:**
KiCad E.D.A. eeschema (5.1.9)-1		Id: 1/1