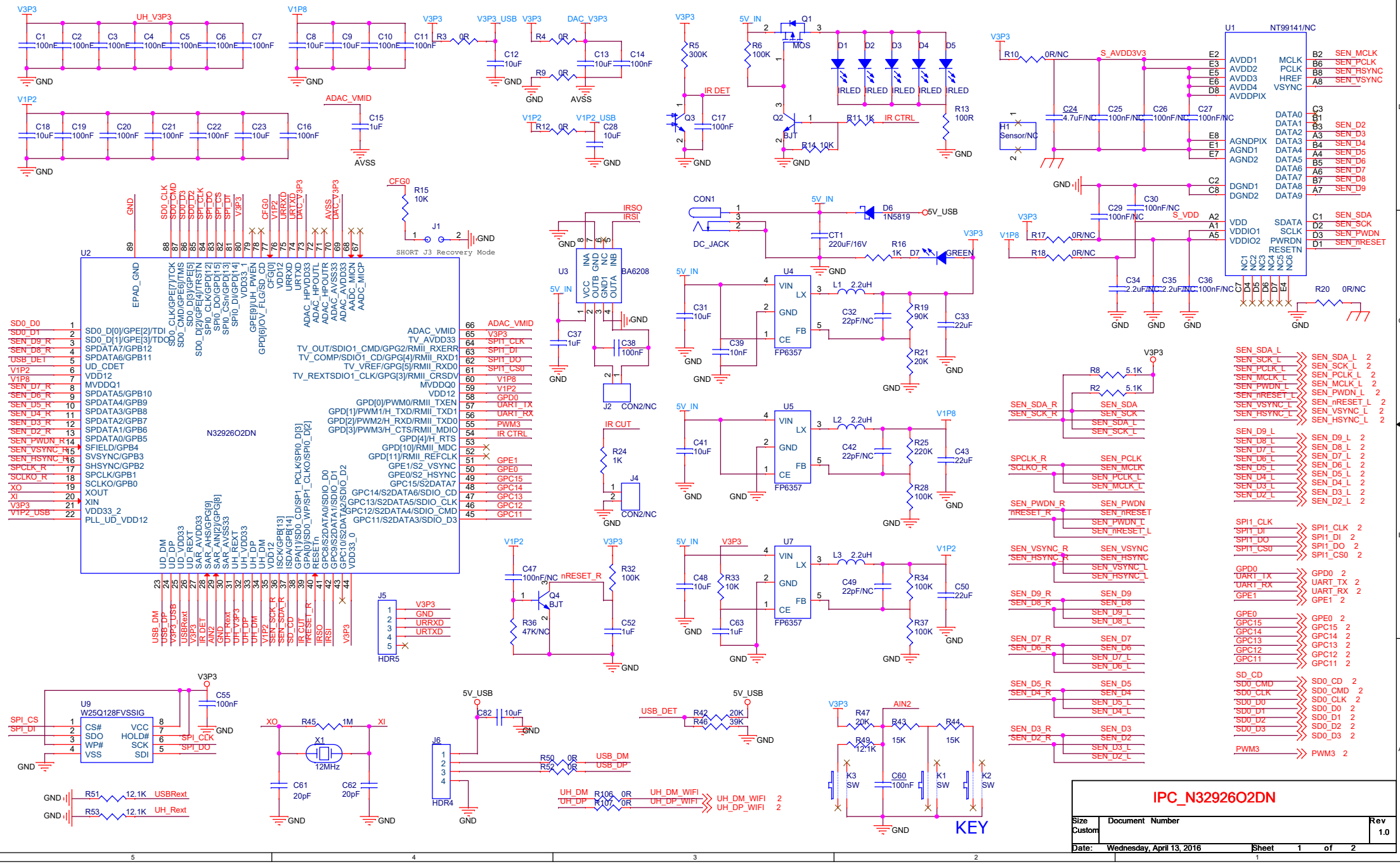
IPC_N32926O2DN
Size Custom
Document Number
Rev 1.0
Date: Wednesday, April 13, 2016
Sheet 1 of 2
KEY
U2 N32926O2DN
U1 NT99141/NC
U3 BA6208
U4 FP6357
U5 FP6357
U7 FP6357
U9 W25Q128FVSSIG
CON1 DC_JACK
J1 SHORT J3 Recovery Mode
J2 CON2/NC
J4 CON2/NC
J5 HDR5
J6 HDR4
H1 Sensor/NC
Q1 MOS
Q2 BJT
Q3
Q4 BJT
X1 12MHz
K1 SW
K2 SW
K3 SW
D1 D2 D3 D4 D5 IRLED
D6 1N5819
D7 GREEN
5V_IN
5V_USB
V3P3
V1P8
V1P2
AVSS
GND
IR DET
IR CTRL
IR CUT
ADAC_VMID
S_AVDD3V3
S_VDD
SEN_MCLK
SEN_PCLK
SEN_HSYNC
SEN_VSYNC
SEN_D2
SEN_D3
SEN_D4
SEN_D5
SEN_D6
SEN_D7
SEN_D8
SEN_D9
SEN_SDA
SEN_SCK
SEN_PWDN
SEN_nRESET
SPI1_CLK
SPI1_DI
SPI1_DO
SPI1_CS0
GPD0
UART_TX
UART_RX
GPE1
GPE0
GPC15
GPC14
GPC13
GPC12
GPC11
SD_CD
SD0_CD
SD0_CMD
SD0_CLK
SD0_D0
SD0_D1
SD0_D2
SD0_D3
PWM3
UH_DM_WIFI
UH_DP_WIFI
USB_DM
USB_DP
USBRext
UH_Rext
SPI_CS
SPI_DI
SPI_CLK
SPI_DO
XO
XI
IRSO
IRSI
CFG0
AIN2

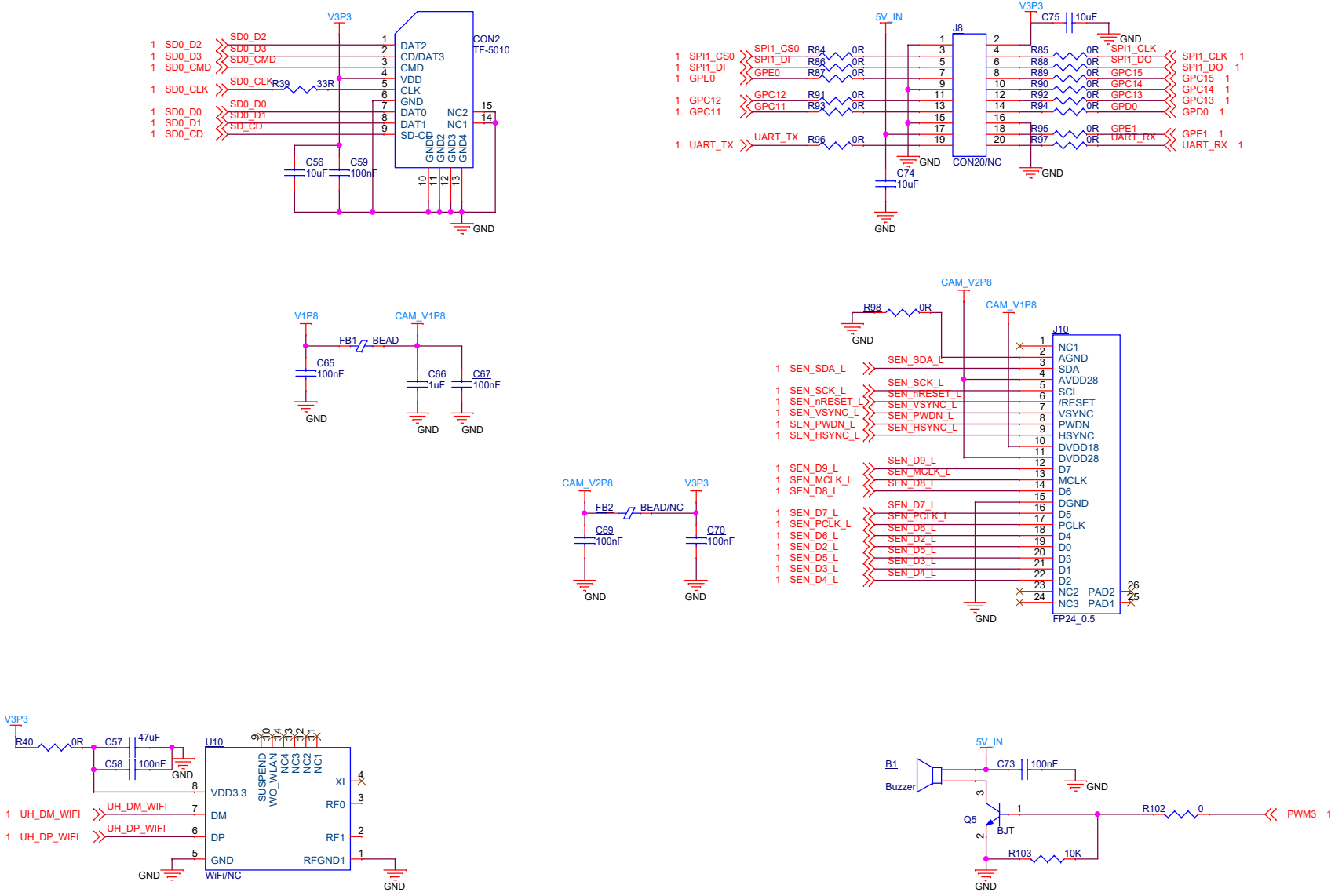

IPC_N32926O2DN

Size	Document Number	Rev
Custom		1.0

Date: Wednesday, April 13, 2016 Sheet 2 of 2