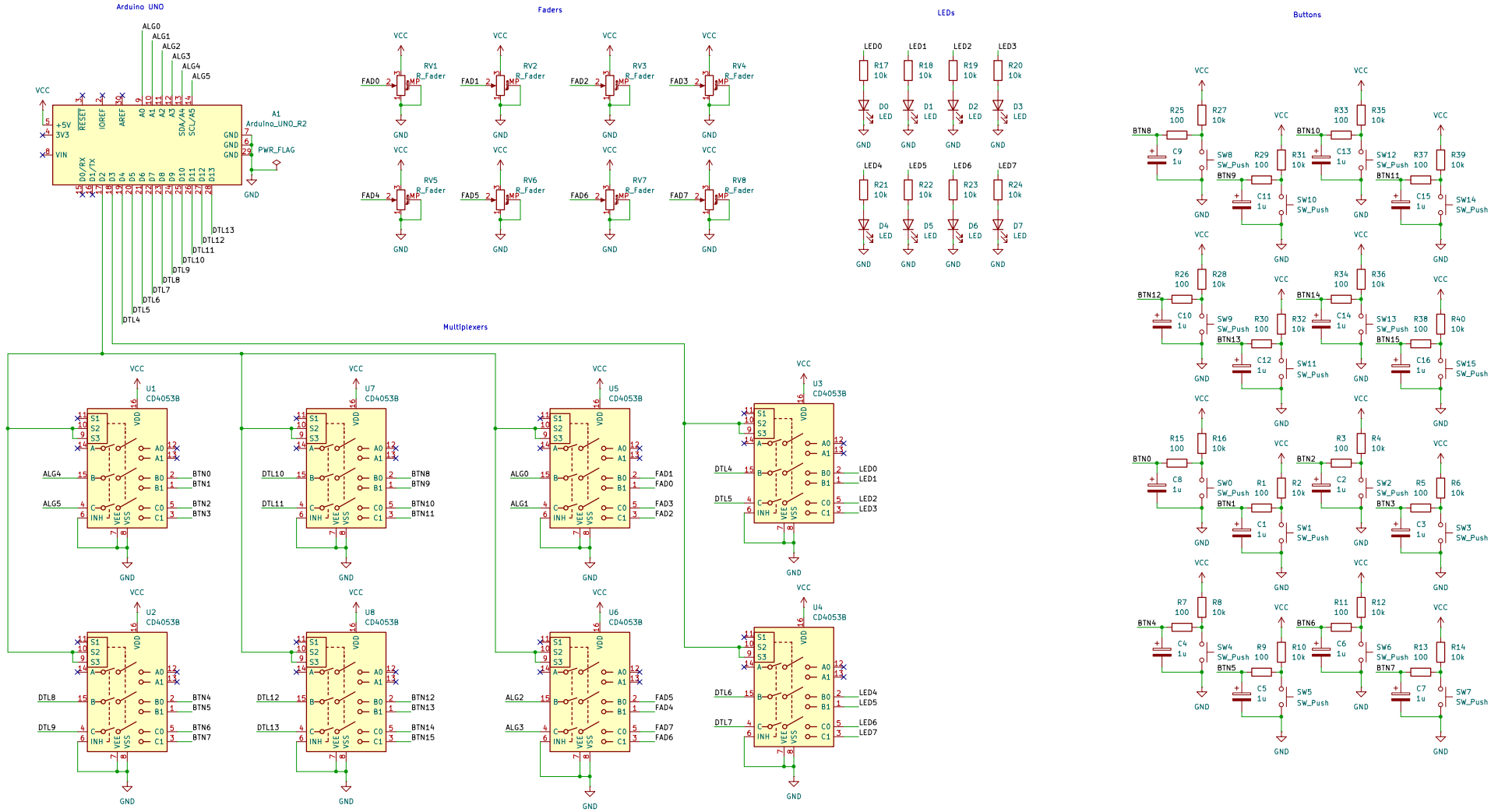

Arduino Pin D2 toggles the state of the input multiplexers (faders, buttons).
Arduino Pin D3 toggles the state of the output multiplexers (LEDs)

Arduino Pins A4, A5, D8–D13 go to the buttons (thru multiplexers).
Arduino Pins A1–A4 go to the faders (thru multiplexers).
Arduino Pins D4–D7 go to the LEDs (thru multiplexers).

Sheet: /
File: Controller PCB Files.kicad_sch

Title: Controller Buttons

Size: A3	Date: 2025-03-08	Rev: 0
KiCad E.D.A. 9.0.0		Id: 1/1