Innovative Estimation Methods in Item Response Theory: Replication and Extension

Joseph Li Wan-Wang

Supervisor: Dr. Jeremy Miles

University of Tübingen - Methods Center

University of Southern California - Keck School of Medicine

Google LLC

Abstract

This report presents a two-part study in Item Response Theory (IRT): (i) a replication of the simulation experiments reported in Tsutsumi et al. (2021) comparing Bayesian MCMC-IRT (2PL) to a deep-learning alternative (Deep-IRT), and (ii) a concept-proof for a methodological extension of the previous study that frames adaptive item selection as a contextual Multi-Armed Bandit (MAB), proposing a Conditional Upper Confidence Bound algorithm supported by a Generalized Linear Model (Filippi et al., 2010; Li et al., 2010).

Across the simulations that replicate the original settings, we corroborate the findings of Tsutsumi et al. (2021): The traditional bayesian IRT estimation method performs best under benign settings with data generated under standard assumptions (e.g. random assignment, normal single-population distribution), whereas Deep-IRT is more robust when test forms don't follow those distributional assumptions.

The bandit-based MAB-IRT method performs comparably to MCMC-IRT under benign settings but it struggles under regimes where standard assumptions don't hold. This limitations could be overcome in future studies by using non-parametric versions of the method tested. The method shows promise; additionally, there is a range of unexplored alternatives that may lead to further improvement. We also discuss the difficulties associated with replication in simulation studies.

Innovative Estimation Methods in Item Response Theory: Replication and Extension

Introduction

Item Response Theory (IRT) is a widely used statistical framework for psychometrics that models the probability of a correct response as a function of latent ability and item characteristics. Some advantages with respect to Classical Test Theory (CTT) include less sample-dependent parameter interpretations, fairer cross-form comparisons and more adaptive test designs (Hambleton & Jones, 1993).

IRT uses binary outcome models to place both person abilities and item parameters on the same latent scale (de Ayala, 2009). Because these parameters are (approximately) sample and test-invariant up to a linear transformation, IRT enables core operations of modern assessment: building and maintaining calibrated item banks; linking and equating multiple forms to a common scale for comparable scores; efficient, precise measurement via computerized adaptive testing; and fairness evaluations through differential item functioning analysis (van der Linden, 2016). IRT is construct-centered, and maximizes explicative validity, adhering with the "new rules of measurement" paradigm (Embretson, 1996).

Historically, estimation methods for IRT models moved from frequentist marginal maximum likelihood (MML) via the EM algorithm in the 1980s to the more computationally expensive Bayesian Markov chain Monte Carlo (MCMC) in the late 1990s (Cai et al., 2016). Since then, algorithmic refinements have improved scalability and robustness, but no major changes to the general approach happened since then (Cai et al., 2016).

Bayesian IRT, like MCMC, generally relies on distributional assumptions of the latent trait, random selection assumptions and explicit linking across forms that relies on anchor items. Violation of these assumptions or requirements can lead to biased parameter estimates (van der Linden & Barrett, 2016), and alternative IRT models may be needed to handle these situations . Tsutsumi et al. (2021) introduce *Deep-IRT*, a deep-learning alternative aimed at relaxing such assumptions and improving estimation when forms differ by population abilities or overlap is limited. The work described in this report follows the simulation studies described by this paper and aims to replicate them and search for possible extensions. In their design, the authors vary key

data-generating assumptions to test model robustness. Specifically, whether examinees are randomly or systematically assigned to forms, and whether abilities follow a single normal distribution or a bimodal (non-normal) mixture of two populations.

Replication of simulation studies like the one presented in Tsutsumi et al. (2021) often suffer from ambiguous reporting and shifting software, undermining reproducibility and replicability (Epskamp, 2019). Simulation studies often lack sufficient details to reproduce the scenarios they report. Missing or ambiguous descriptions of data-generating processes (DGPs) and procedures, non-availability of supplementary materials, and outdated or inaccessible software are common barriers (Luijken et al., 2024). Therefore, availability of open code, detailed documentation of DGPs and analysis pipelines are crucial when reporting a simulation study. In this report we: (i) describe the data-generating process and all hyperparameters used; (ii) use open-source tooling; (iii) set and report random seeds; (iv) share runnable code and scripts.

Large-scale replication initiatives consistently report high rates of partially or fully failed replications, underscoring how fragile published results can be (Gordon et al., 2020; Holzmeister et al., 2025; Klein et al., 2014; Open Science Collaboration, 2015). Conversely, the incentives in academia favor positive findings in such a way that selective reporting and publication bias tend to tilt benchmarks, making the newly developed models appear best (Fanelli, 2010; Ioannidis, 2005). These concerns motivate our emphasis on transparent DGPs, fixed and reported hyperparameters, seeded randomness, and fully runnable code/scripts to enable exact reruns and fair, like-for-like comparisons.

Given the information provided in Tsutsumi et al. (2021), we were unable to aim for a direct replication (following the definition of Nosek and Errington (2020)). Therefore, this paper reports (*i*) an attempted conceptual replication of the Deep-IRT simulation experiments, re-implementing MCMC-IRT and a PyTorch version of Deep-IRT following the steps described in Tsutsumi et al. (2021); and (*ii*) a conceptual-proof extension via a new contextual-bandit based approach (GLM-UCB) to adaptive item selection (Filippi et al., 2010; Li et al., 2010; Melesko & Novickij, 2019) that we call MAB-IRT with the aim of also showing the challenges of writing a report that allows for full replicability.

All simulations presented below follow the baseline setup described in Tsutsumi et al. (2021) for the two-parameter logistic model (2PL).

$$\mathbb{P}(u_{ij} = 1 \mid \theta_i, a_j, b_j) = \mathbb{P}_j(\theta_i) = \frac{1}{1 + \exp\Big(- D\, a_j(\theta_i - b_j)\Big)}\,. \tag{1}$$

with $D = 1.7$.

Data is sampled from $\theta \sim \mathcal{N}(0,1)$, $\log a \sim \mathcal{N}(0,1)$, $b \sim \mathcal{N}(1, 0.4)$ and ability recovery accuracy of each estimation technique evaluated is evaluated using Root Mean Square Error (RMSE), Pearson's correlation ρ, and Kendall's correlation τ. A more detailed description is provided below.

Common Setup

For both "replication" and "extension" parts in this project we use the same DGP and metrics for comparability (RMSE, Pearson's ρ, and Kendall's τ); all evaluated on θ after standardization. Item counts, sample sizes, presence of common and assignment regimes were set following Tsutsumi et al. (2021).

We consider $K = 10$ test forms, each with J items and N examinees. In the 2PLM model, item j has discrimination a_j and difficulty b_j, examinee i has ability θ_i, and the probability of a correct response ($u_{ij} = 1$) is described as seen in equation (1):

Data Generating Process

For each experimental setting we generate a distribution with N examinees and J items. While θ_i corresponds to a certain examinee i, a_j and b_j correspond to an item j. Hence, item parameters are sampled once on the global pool:

$$\theta_i \sim \mathcal{N}(0,1),\ \log a_j \sim \mathcal{N}(0,1),\ b_j \sim \mathcal{N}(1, 0.4)\,. \tag{2}$$

Appendix C2 shows the resulting distributions.

Single-population experiments. Subsequently, we assign every examinee to one of the k test forms until we fill the $K = 10$ equally sized groups. This assignment happens under two different regimes depending on the particular experimental setting: (i) *Random Assignment* (i.i.d. sampling), and (ii) *Systematic Assignment*. In the latter examinees are sorted by θ and partitioned into a number of K equally sized test groups that are mapped to each test form in ascending order. No shared examinees between

forms are allowed. Appendix C3 illustrates the θ distributions that result from systematic sampling.

Lastly, to emulate anchor overlap, each form can share either c=5 or c=0 common items with its adjacent test forms (i.e., the k-th form shares items only with forms $k-1$ and $k+1$). In practice, each adjacent pair of forms shares exactly c items; interior forms therefore have $2c$ anchors (shared with both neighbors), while boundary forms have c.

With all those adjustable settings, we generate the exact same scenarios depicted in Tsutsumi et al. (2021). All settings are listed in table 1 and all scenarios result from their combination.

Table 1

Experimental settings used in (Tsutsumi et al., 2021) for single-population experiments

Factor	**Values**
N (examinees per test-form)	50, 100, 500, 1000
J (items per test)	10, 30, 50
K (test forms)	10 (fixed)
C (common items)	0, 5
Selection regime	`random`, `systematic`

In figure 1 we can observe how the DGP generates the distributions of $\theta_{k,i}$ of each test form under both random and "systematic" assignment regimes.

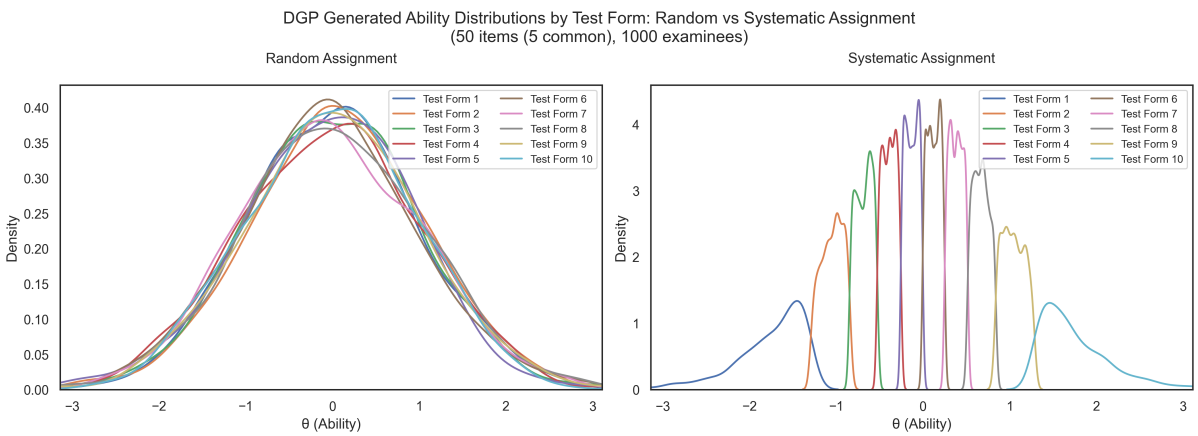

Figure 1

DGP ability distributions by test form under both assignment regimes (10 forms, 50 items, 5 common items, 1000 examinees). Left: *random assignment — test forms overlap around 0.* Right: *systematic assignment — each test form covers a narrow slice of the spectrum.*

Multi-population experiments. Following the expansion of the previous experimental setting presented in Tsutsumi et al. (2021), we reproduce bi-population sampling conditions with symmetric means and common variance, where the degree of overlap is determined by the distance between means of both distributions and their shared variance.

Let $\delta > 0$ and $\sigma^2 > 0$, and define $\mu_1 = -\delta$ and $\mu_2 = +\delta$. Abilities are drawn from a balanced two-component Gaussian mixture:

$$\theta \sim \tfrac{1}{2}\mathcal{N}(\mu_1, \sigma^2) \; + \; \tfrac{1}{2}\mathcal{N}(\mu_2, \sigma^2),$$

e.g., with $\delta = 0.3$ the two populations are $\mathcal{N}(-0.3, \sigma^2)$ and $\mathcal{N}(+0.3, \sigma^2)$ (same variance, opposite means). In our runs, we follow the fixed two-population configuration grid of eight mixtures:

$$(\mu_1, \mu_2, \sigma^2) \in \{(-0.3, +0.3, 0.7), (-0.5, +0.5, 0.5), (-0.7, +0.7, 0.3), (-0.9, +0.9, 0.1)\}$$

with $C \in \{5, 0\}$ common items and where each mean pair is paired with the listed variance, as implemented in Tsutsumi et al. (2021). Figure 2 illustrates how the DGP produces distributions that increasingly overlap as variance rises and the means approach each other.

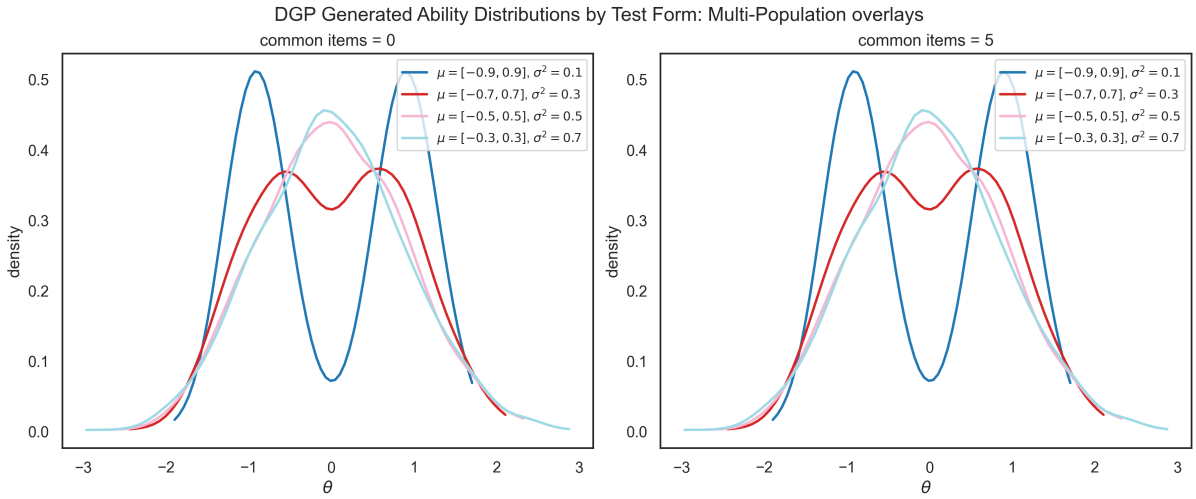

Figure 2

Two-form multi-population DGP: overlays for four (μ_1, μ_2, σ^2) two-population mixtures. Left: *no common items.* Right: *5 common items. As the mean separation increases and the variance decreases, both populations become more distinguishable. Presence of common items does not affect the shape of the distributions*

Response generation.

For each form k and examinee i, we generate a binary response matrix $U_k \in \{0,1\}^{N\times J}$ using (1) with the standard IRT scaling constant $D = 1.7$. The responses are simulated by independent $u_{k,ij} \sim \text{Bernoulli}\big(\mathbb{P}_j(\theta_{k,i})\big)$ draws where $\mathbb{P}_j(\theta)$ is given by Eq. (1). The resulting $\{U_k\}_k$ is used as the training input for all our algorithms, while simulated θ are held out for evaluation.

Reproducibility.

We set a global `seed=42` and initialize all pseudo-random number generators (RNGs) for both data generation and further analysis/experimentation. Batch ordering and any data shuffling use the same seed unless noted. Full per-run seeds and software versions are listed in Appendix A. All code to reproduce the simulations, model fits, and tables/figures is linked in the Data and Code Availability section (Wan, 2025).

Evaluation metrics and linking.

We report RMSE, Pearson's ρ, and Kendall's τ between estimated and true (simulated) abilities. Let $\theta = (\theta_1, \ldots, \theta_N)$ denote the true abilities and $\hat{\theta} = (\hat{\theta}_1, \ldots, \hat{\theta}_N)$ the estimates for a given test. We report:

$$\text{RMSE} = \sqrt{\frac{1}{N}\sum_{i=1}^{N}\big(\tilde{\theta}_i - \theta_i\big)^2}, \quad r = \text{corr}(\hat{\theta}, \theta), \quad \tau = \text{Kendall}(\hat{\theta}, \theta).$$

Following (Tsutsumi et al., 2021), The Deep-IRT $\hat{\theta}$ are standardized before RMSE; for comparability, we apply the same standardization before calculation of RMSE when needed:

$$\tilde{\theta}_i = \frac{\hat{\theta}_i - \overline{\hat{\theta}}}{s_{\hat{\theta}}} \quad \text{(z-score per test)}.$$

This alligns $\hat{\theta}$ with the scale of the DGP ($\theta \sim \mathcal{N}(0,1)$), making RMSE comparable between methods and conditions.

For the MCMC-IRT and MAB-IRT methods, whenever test forms are estimated separately, we link $\hat{\theta}$ across forms via post-hoc linear transformations whenever there are common items for comparability across test-forms (van der Linden & Barrett, 2016). For MCMC-IRT we use mean/mean (shift-only) common-item linking based on anchor item difficulties b_j (Kolen & Brennan, 2014). Let A_k be the set of common items

between the reference form and form k. We compute:

$$C_k \;=\; \frac{1}{|A_k|}\sum_{j\in A_k} b_j^{\text{ref}} \;-\; \frac{1}{|A_k|}\sum_{j\in A_k} b_j^{\text{cur}}, \quad \text{and set} \quad \hat{\theta}'_{(k)} \;=\; \hat{\theta}_{(k)} + C_k.$$

For MAB-IRT we estimate an affine map from form k to the reference form using common items' *effective* item coefficients: intercept β_{0j} and slope $w + \beta_{1j}$. For each $j \in A_k$ we form

$$A_{k,j} \approx \frac{(w+\beta_{1j})^{\text{cur}}}{(w+\beta_{1j})^{\text{ref}}}, \qquad \frac{B_{k,j}}{A_{k,j}} \approx \frac{\beta_{0j}^{\text{cur}} - \beta_{0j}^{\text{ref}}}{(w+\beta_{1j})^{\text{cur}}}.$$

We then take robust medians across anchors,
$\tilde{A}_k = \text{median}_j(A_{k,j})$, $\widetilde{BA}_k = \text{median}_j(B_{k,j}/A_{k,j})$, and set
$\tilde{B}_k = \tilde{A}_k \cdot \widetilde{BA}_k$, $\hat{\theta}'_{(k)} = \tilde{A}_k\,\hat{\theta}_{(k)} + \tilde{B}_k$.

Part I: Replication Studies

MCMC-IRT

Markov Chain Monte Carlo (MCMC) is a family of algorithms for sampling from complex probability distributions when direct sampling is not possible (Brooks et al., 2011).

In Bayesian IRT, MCMC estimates posterior distributions by drawing samples from the joint posterior distribution of person abilities θ and item parameters, which combines the likelihood from observed responses with prior distributions that encode initial beliefs for these parameters (Gelman et al., 2013; Patz & Junker, 1999). Common algorithms include Gibbs sampling, Metropolis–Hastings, and modern variants like No-U-Turn Sampler (NUTS) that use gradient information for efficient high-dimensional sampling (Hoffman & Gelman, 2014).

Tsutsumi et al. (2021) state that they use EAP obtained via MCMC for their "standard" IRT implementation but do not specify what particular algorithm. Other unavailable details include: iteration counts, burn-in, convergence criteria, or the software used. They do report the priors used, but not the linking method. In our implementation we use PyMC (Salvatier et al., 2016) version 5.22.0 and adopt the mean/mean linking for simplicity, making all remaining implementation details explicit in Appendix A.

The 2PL model is invariant to shifts and scaling of θ and (a, b). Without constraints, different parameterizations will produce the same likelihood. To address

this, we standardize $\hat{\theta}$ after estimation. To compare separately calibrated test forms, we apply an external linking step (see MCMC-IRT).

Method. Following the available information in Tsutsumi et al. (2021), we fit a Bayesian 2PL with likelihood given by (1) and the same priors specified in the article $\theta_i \sim \mathcal{N}(0,1)$, $\log a_j \sim \mathcal{N}(0,1)$, $b_j \sim \mathcal{N}(1,0.4)$. Posterior means of θ (EAP) are estimated via NUTS in PyMC (Hoffman & Gelman, 2014; Salvatier et al., 2016). The full sampler configuration (chains, draws, tune, target acceptance, and diagnostic thresholds) is documented in Appendix A. An illustrative traceplot is provided in Appendix C1.

When common items exist, we apply post-hoc mean/mean linking as described in Evaluation metrics and linking. Regarding scale and identifiability, given that the DGP uses $\theta_i \sim \mathcal{N}(0,1)$, we z-score $\hat{\theta}$ per form prior to RMSE to place estimates on the DGP scale, consistent with Tsutsumi et al. (2021). The full replication sweep required approximately 11:15 hours of wall-clock time on an AMD EPYC™ 9454 CPU (48 cores).

Deep-IRT

Deep-IRT is a flexible IRT estimator introduced by Tsutsumi et al. (2021) that replaces the parametric Item Characteristic Curve (ICC) with a neural network. By jointly embedding examinees and items, Deep-IRT relaxes distributional and linking assumptions, offering robust ability estimation when test forms differ in population or lack common anchors.

Deep-IRT uses a dual Multi-Layer Perceptron (MLP) architecture that takes one-hot encoded examinee and item inputs, computes their embedding difference through two hidden layers (`tanh`, size 50), and applies softmax to response logits. The last linear outputs are interpreted as ability θ_i and difficulty b_j and logits are mapped to probabilities and trained with cross-entropy plus the cost-sensitive terms (see Appendix A). Figure 3 shows this dual architecture.

Method. Following Tsutsumi et al. (2021), we code a PyTorch variant using the previously described architecture, including latent size, hidden layers, tanh, optimizer (Adam), and standardizing ability embeddings before evaluation. The authors use Chainer ("Chainer", 2021) for their implementation. However, in our environment (Python 3.11) this package was unavailable since it was discontinued. Therefore, our implementation used PyTorch 2.6.0 instead (Paszke et al., 2019). As Deep-IRT claims

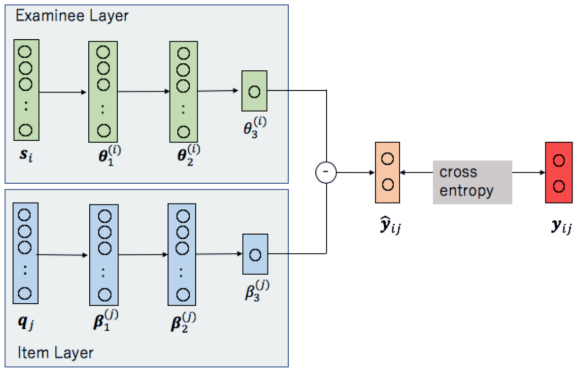

Figure 3
Deep-IRT architecture proposed by Tsutsumi et al., 2021

not to require linkage across forms (Tsutsumi et al., 2021), we do not apply post-hoc linking to its estimates.

Tsutsumi et al. (2021) report some hyperparameters such as the hidden sizes of both sub-networks, number of epochs (300), cost-sensitive weights (γ), thresholds (α) and optimizer (Adam). However, they do not report learning rate or batch size. We therefore use $\text{lr} = 10^{-3}$ and a batch size of 512 for efficiency. All other training details are included in Appendix A. The full replication sweep required approximately 05:48 hours of wall-clock time on an AMD EPYC^{TM} 9454 CPU.

Replication Outcomes

We run both MCMC-IRT and Deep-IRT models under the three experimental settings described in Data Generating Process section. Namely, the single-population random assignment regime, the single-population systematic assignment regime, and the two-form multi-population experiment. Full tables are provided in Appendix B.

Random Assignment. As reported in B1, MCMC-IRT yields a better accuracy than Deep-IRT for all cells, in line with Tsutsumi et al. (2021). Absolute errors in our runs are modestly higher than those in the original report (especially at low item counts), but the qualitative trends match: increasing the number of items per form (J) consistently improves accuracy for both methods, while gains from adding examinees (N) do not appear to be monotonic, except for Deep-IRT when $J = 50$. Common items have small and mixed effects under random assignment: for MCMC-IRT, they slightly worsen RMSE in many cells, whereas Deep-IRT does not show any substantial nor consistent trend.

Systematic Assignment. Under systematic assignment (B2), the pattern reverses in most cells. Deep-IRT tends to outperform MCMC-IRT, especially when N is larger and with common items. In MCMC-IRT we observe degrading metrics as N increases with J fixed, e.g., for J=10 and C=5, Deep-IRT improves as N increases, while MCMC-IRT degrades. The improvement in Deep-IRT is however, not so clear at J=30 and J=50; indicating a non-monotonic trend (Schaeffer et al., 2023). Common items benefit Deep-IRT substantially under systematic assignment whereas MCMC-IRT does not show a clear pattern in that regard. Increasing J again helps both methods, but in a more pronounced way in Deep-IRT. Overall, accuracy levels are systematically worse than those reported by Tsutsumi et al. (2021), but the general trends are again in line with the original findings.

Multi-Population Experiment. In the bi-population setting (B3), trends depend on the level of overlap between the two Gaussians and on the presence of common items. With C=5 common items, MCMC-IRT performs best when the population means are close (i.e., when μ_1=−0.3, μ_2=0.3 and μ_1=−0.5, μ_2=0.5), whereas Deep-IRT overtakes MCMC-IRT as the means separate and variance shrinks. With C=0, the performance of both models degrades substantially, but Deep-IRT performs slightly better except e at the most extreme separation (i.e., when μ_1=−0.9, μ_2=0.9). Again, all accuracy values are worse than those reported by Tsutsumi et al. (2021), but the general trends are very similar.

Part II: Extension Study

MAB-IRT: GLM-UCB Bandit (Proof of Concept)

With the aim to extend the study presented in Part I: Replication Studies with a reproducible contribution, we prototype a GLM-UCB adaptive item selector inspired by Li et al. (2010) and Filippi et al. (2010): at each step, the algorithm selects the item that maximizes an upper-confidence bound on the predicted probability of a correct response under a logistic model.

Previous work has explored UCB-based Computerized Adaptive Testing (CAT) for formative assessment (Melesko & Novickij, 2019). We take this further by using (Hybrid) Conditional UCB Li et al. (2010), conditioning on the examinee's current ability estimate and the candidate item via separate global and item-specific feature blocks. Because responses are binary, we use a logistic Generalized Linear Model

(Filippi et al., 2010). Each arm corresponds to one item, and each item has an associated GLM whose parameters are updated after each observed response. The item intercept $\beta_{0,j}$ acts as difficulty, while the effective discrimination is $a_j = w + \beta_{1,j}$, where w is a global slope that is shared across items for sample efficiency.

Method. For examinee i with current ability estimate $\hat{\theta}_i$ and item j, the probability Y_{ij} of a correct response is:

$$\mathbb{P}(Y_{ij} = 1 \mid \hat{\theta}_i) \;=\; \sigma\Big(\beta_{0,j} + (w + \beta_{1,j})\,\hat{\theta}_i\Big), \qquad \sigma(u) \;=\; \frac{1}{1+\exp(-u)}.$$

In a CAT, ability estimates are updated online. In this case, since we have off-line data, we simulate an online CAT process within the dataset to estimate the parameters. The item selection process is cast as a contextual bandit (Li et al., 2010) with an Upper-Confidence Bound (UCB) score at each training step:

$$\mathrm{UCB}_{ij} \;=\; \mu_{ij} \;+\; \tfrac{1}{4}\,\alpha_t\,\sqrt{v\,\hat{\theta}_i^2 \;+\; z^\top \Sigma_j z}$$

where:

$$\mu_{ij} = \sigma\Big(\beta_{0,j} + (w + \beta_{1,j})\,\hat{\theta}_i\Big), \qquad z = [\,1,\ \hat{\theta}_i\,]^\top, \qquad v := V^{-1} \in \mathbb{R}_+, \qquad \Sigma_j := A_j^{-1} \in \mathbb{R}^{2\times 2}.$$

V : Global information matrix for the shared slope w; its inverse V^{-1} approximates $\mathrm{Var}(w)$ (size 1×1).

A_j : Item-j information matrix for $(\beta_{0,j}, \beta_{1,j})$; its inverse A_j^{-1} approximates their covariance (size 2×2).

α_t : Tunable exploration weight

Implementation details (clipping, replay passes) are documented in Appendix A. On an AMD EPYC™ 9454 CPU the hybrid bandit runs in 11:42 min, notably faster than the baselines (consistent with an online-learning design).

Extension Results

In the same way as in Part I: Replication Studies, we run MAB-IRT and compare the results against the previous MCMC-IRT implementation under the three

experimental settings in Data Generating Process section. Full tables are again provided in Appendix B.

Random Assignment. As reported in B4, MCMC-IRT yields a better accuracy than MAB-IRT in all cells. However, the difference in performance is narrow and the values very close. Especially in terms of rank/linear association ($\approx$ 0.02-0.04 difference in Kendall's τ/Pearson's ρ), but higher in terms of absolute error ($\approx$10-20% difference in RMSE). Furthermore, in a similar way as in Part I: Replication Studies, we observe a non-monotonic trend as the number of examinees increases when the number of items is small or medium (i.e. with $J = 10$ and $J = 30$).

Systematic Assignment. Under systematic assignment (B5), MAB-IRT under-performs markedly: RMSE increases substantially compared to MCMC-IRT and correlations are low, with Pearson frequently near zero or even negative in few cells, while MCMC-IRT only degrades slightly and retains positive associations.

Multi-Population. In B6, as population separation $|\mu_1 - \mu_2|$ grows, both methods deteriorate. With $C = 5$ common items, the decline affects MCMC-IRT and MAB-IRT in a similar degree. With $C = 0$ common items, the decline is more pronounced in MAB-IRT, showing a sharper increase in RMSE / drop in correlations.

Discussion

Replication

Our replication study corroborates Tsutsumi et al. (2021)'s main qualitative conclusions. Namely, that under the classical i.i.d. assumptions MCMC-IRT performs best, while Deep-IRT shows a higher performance than MCMC-IRT under systematic assignment and non-normal distributions. On the other hand, we showcase the fragility of reproducibility under partial reporting and deprecated software (Epskamp, 2019), given the quantitative divergences with respect to the original study. We find for example that all our absolute RMSEs are higher than in Tsutsumi et al. (2021) (especially with few items), or that MCMC sometimes worsens as N increases.

In line with Luijken et al. (2024), we ran through a set of replication hurdles such as missing implementation details and software discrepancies, underscoring why explicit DGPs and open code are essential for simulation-based research.

For example, Tsutsumi et al. (2021) do not specify the linkage method to use. For parsimony, we use the mean/mean linkage, but the missing detail is crucial: larger

N reduces variance but does not remove scale bias across separately estimated forms nor adds degrees of freedom, while adding *items* increases identifiable structure, increasing accuracy (Kolen & Brennan, 2014). Therefore, the type of linkage affects how MCMC-IRT behaves when N increases, explaining why we observe a non-monotonic trend which is not observed in Tsutsumi et al. (2021). Future studies should evaluate alternative linkage methods (e.g., Haebara, Stocking–Lord) to assess sensitivity.

For Deep-IRT we also observe non-monotonic error trends when N increases, consistent with the *double descent* phenomenon (Schaeffer et al., 2023). We performed a small ablation study adding L_2 (ridge) regularization Hoerl and Kennard (1970) and we observed improved accuracy and monotonicity, specially with high J (see Appendix Table B7), supporting the presence of double descent in our results.

Replication lessons. In our study, we applied all controls mentioned in Tsutsumi et al. (2021), e.g., matching D=1.7, z-scoring before RMSE. We also seeded runs and reported software versions and hyper-parameters, along with a more comprehensive description of the DGP. Future work should explicitly report similar details to enable exact reruns. We recommend reporting: full sampler configurations, *linkage* choice, scaling constants, learning-rate/batch-size, regularization, seeds, and machine/software details; together with openly runnable code and precise DGP specifications.

Extension

MAB-IRT shows promise in terms of time efficiency and implementability, aligning with the current literature on Conditional-MAB and adaptive testing (Filippi et al., 2010; Li et al., 2010; Melesko & Novickij, 2019; Sharpnack et al., 2024). In random assignment it tracks associations similarly to other estimation methods, while in systematic and multi-population settings performance degrades. Runtime remains a clear advantage (about 11:42 min on AMD EPYC™ 9454), which illustrates the practical appeal of an online-learning selector.

In our proposed variant of MAB-IRT, we use logistic GLM-UCB with a shared slope and post-hoc alignment. This variant is vulnerable to population shifts: even as N grows, variance shrinks but scale bias persists because forms are calibrated and linked around a parametric (Kolen & Brennan, 2014). This motivates future exploration of more flexible non-parametric variants that can be paired with joint calibration rather

than post-hoc linking; such as kernel-based UCB algorithms (Zenati et al., 2022). Modeling the reward function in a reproducing kernel Hilbert space allows to flexibly capture more complex, nonlinear relationships without relying on restrictive parametric assumptions, potentially solving the underperformance in the systematic assignment and multipopulation scenarios.

Similar to MCMC-IRT and Deep-IRT, we observe non-monotonic trends as N increases. The same explanation given in section Replication applies here regarding the bias–variance trade-off across forms (Kolen & Brennan, 2014).

Lastly, due to time and compute constraints we did not conduct a systematic hyperparameter study, so reported results are likely conservative as the model was not fully tuned and mainly thought of as a proof-of-concept. We advice future research to include extensive hyperparameter search studies for optimal performance.

Extension lessons. Beyond terms of performance, this extension/proof-of-concept study also serves as a compact case study in rigorous documentation of an innovation: we explicitly report assumptions, hyperparameters, linking choices, seeds, and implementation notes along with all used code to enable exact reruns. This constituted the most time-consuming and labor-intensive aspect of the project.

Conclusion

Our 2-part study allows us to draw two main methodological conclusions. (i) *Replication is difficult*: detailed, open methods are essential. A written report cannot capture all the degrees of freedom in a simulation study, therefore, providing open-source code and explicit description of the methods is essential. (ii) *Innovation is difficult*: new algorithms must confront tuning and fair evaluation. But most importantly, the process must be fully documented to allow for future replication. This requires much time, labor and resources which are not always available to the researcher. If we compare the three implementations that have been tested in this study, we conclude that MAB-IRT is better if we look for a more agile solution in settings where classical assumptions hold, Deep-IRT offers the greatest robustness when data deviates from these standard distributional assumptions, and traditional MCMC-IRT remains the gold standard for pure accuracy when computational time is not a constraint.

References

Brooks, S., Gelman, A., Jones, G. L., & Meng, X.-L. (Eds.). (2011). *Handbook of markov chain monte carlo*. Chapman & Hall/CRC. https://doi.org/10.1201/b10905

Cai, L., Choi, K., Hansen, M., & Harrell, L. (2016). Item response theory. *Annual Review of Statistics and Its Application*, *3*, 297–321. https://doi.org/10.1146/annurev-statistics-041715-033702

Chainer [Accessed on 23 April 2021]. (2021).

de Ayala, R. J. (2009). *The theory and practice of item response theory*. Guilford Press. https://www.guilford.com/books/The-Theory-and-Practice-of-Item-Response-Theory/R-de-Ayala/9781462547753

Embretson, S. E. (1996). The new rules of measurement. *Psychological Assessment*, *8*(4), 341–349. https://doi.org/10.1037/1040-3590.8.4.341

Epskamp, S. (2019). Reproducibility and replicability in a fast-paced methodological world. *Advances in Methods and Practices in Psychological Science*, *2*(4), 264–276. https://doi.org/10.1177/2515245919847421

Fanelli, D. (2010). Do pressures to publish increase scientists' bias? an empirical support from US states data. *PLoS ONE*, *5*(4), e10271. https://doi.org/10.1371/journal.pone.0010271

Filippi, S., Cappé, O., Garivier, A., & Szepesvári, C. (2010). Parametric bandits: The generalized linear case. *Advances in Neural Information Processing Systems 23 (NeurIPS)*, 586–594. https://papers.nips.cc/paper/4166-parametric-bandits-the-generalized-linear-case

Gelman, A., Carlin, J. B., Stern, H. S., Dunson, D. B., Vehtari, A., & Rubin, D. B. (2013). *Bayesian data analysis* (3rd ed.). Chapman & Hall/CRC.

Gordon, M., Viganola, D., Bishop, M., Chen, Y., Dreber, A., Goldfedder, B., Holzmeister, F., Johannesson, M., Liu, Y., Twardy, C., Wang, J., & Pfeiffer, T. (2020). Are replication rates the same across academic fields? community forecasts from the darpa score programme. *Royal Society Open Science*, *7*(7), 200566. https://doi.org/10.1098/rsos.200566

Hambleton, R. K., & Jones, R. W. (1993). Comparison of classical test theory and item response theory and their applications to test development. *Educational Measurement: Issues and Practice*, *12*(3), 38–47.

Hoerl, A. E., & Kennard, R. W. (1970). Ridge regression: Biased estimation for nonorthogonal problems. *Technometrics*, *12*(1), 55–67. https://doi.org/10.1080/00401706.1970.10488634

Hoffman, M. D., & Gelman, A. (2014). The no-u-turn sampler: Adaptively setting path lengths in hamiltonian monte carlo. *Journal of Machine Learning Research*, *15*(1), 1593–1623.

Holzmeister, F., Johannesson, M., Camerer, C. F., Chen, Y., Ho, T.-H., Hoogeveen, S., Huber, J., Imai, N., Imai, T., Jin, L., Kirchler, M., Ly, A., Mandl, B., Manfredi, D., Nave, G., Nosek, B. A., Pfeiffer, T., Sarafoglou, A., Schwaiger, R., ... Dreber, A. (2025). Examining the replicability of online experiments selected by a decision market. *Nature Human Behaviour*, *9*(2), 316–330. https://doi.org/10.1038/s41562-024-02062-9

Ioannidis, J. P. A. (2005). Why most published research findings are false. *PLoS Medicine*, *2*(8), e124. https://doi.org/10.1371/journal.pmed.0020124

Klein, R. A., et al. (2014). Investigating variation in replicability: A "many labs" replication project. *Social Psychology*, *45*(3), 142–152. https://doi.org/10.1027/1864-9335/a000178

Kolen, M. J., & Brennan, R. L. (2014). *Test equating, scaling, and linking: Methods and practices* (3rd ed.). Springer. https://doi.org/10.1007/978-1-4939-0317-7

Li, L., Chu, W., Langford, J., & Schapire, R. E. (2010). A contextual-bandit approach to personalized news article recommendation [arXiv:1003.0146]. *Proceedings of the 19th International Conference on World Wide Web (WWW)*, 661–670.

Luijken, K., Lohmann, A., Alter, U., Claramunt Gonzalez, J., Fossum, J. L., Hesen, L., Huizing, A. H. J., Ketelaar, J., Montoya, A. K., Nab, L., Nijman, R. C. C., Penning de Vries, B. B. L., Tibbe, T. D., Wang, Y. A., & Groenwold, R. H. H. (2024). Replicability of simulation studies for the investigation of statistical methods: The replisims project. *Royal Society Open Science*, *11*, 231003. https://doi.org/10.1098/rsos.231003

Melesko, J., & Novickij, V. (2019). Computer adaptive testing using upper-confidence bound algorithm for formative assessment. *Applied Sciences*, *9*(20), 4303. https://doi.org/10.3390/app9204303

Nosek, B. A., & Errington, T. M. (2020). What is replication? *PLOS Biology*, *18*(3), e3000691. https://doi.org/10.1371/journal.pbio.3000691

Open Science Collaboration. (2015). Estimating the reproducibility of psychological science. *Science*, *349*(6251), aac4716. https://doi.org/10.1126/science.aac4716

Paszke, A., Gross, S., Massa, F., Lerer, A., Bradbury, J., Chanan, G., Killeen, T., Lin, Z., Gimelshein, N., Antiga, L., et al. (2019). Pytorch: An imperative style, high-performance deep learning library. *Advances in Neural Information Processing Systems 32*.

Patz, R. J., & Junker, B. W. (1999). Applications and extensions of mcmc in irt: Multiple item types, missing data, and rated responses. *Journal of Educational and Behavioral Statistics*, *24*(4), 342–366. https://doi.org/10.3102/10769986024004342

Salvatier, J., Wiecki, T. V., & Fonnesbeck, C. (2016). Probabilistic programming in python using pymc3. *PeerJ Computer Science*, *2*, e55. https://doi.org/10.7717/peerj-cs.55

Schaeffer, R., Khona, M., Robertson, Z., Boopathy, A., Pistunova, K., Rocks, J. W., Fiete, I. R., & Koyejo, O. (2023). Double descent demystified: Identifying, interpreting & ablating the sources of a deep learning puzzle. https://arxiv.org/abs/2303.14151

Sharpnack, J., Hao, K., Mulcaire, P., Bicknell, K., LaFlair, G., Yancey, K., & von Davier, A. A. (2024). Banditcat and autoirt: Machine learning approaches to computerized adaptive testing and item calibration. https://arxiv.org/abs/2410.21033

Tsutsumi, E., Kinoshita, R., & Ueno, M. (2021). Deep item response theory as a novel test theory based on deep learning. *Electronics*, *10*(9), 1020. https://doi.org/10.3390/electronics10091020

van der Linden, W. J. (Ed.). (2016). *Handbook of item response theory (three-volume set)*. Chapman & Hall/CRC. https://doi.org/10.1201/9781315119144

van der Linden, W. J., & Barrett, M. D. (2016). Linking item response model parameters. *Psychometrika*, *81*(3), 650–673. https://doi.org/10.1007/s11336-015-9469-6

Wan, J. (2025). 2pml-irt estimation: Mcmc-irt, deep-irt, and mab-irt (replication package) [accessed 20 Aug 2025].

Zenati, H., Bietti, A., Diemert, E., Mairal, J., Martin, M., & Gaillard, P. (2022). Efficient kernel ucb for contextual bandits. https://arxiv.org/abs/2202.05638

Data and Code Availability

Synthetic datasets are generated by the DGP in this repository. All code to reproduce the simulations, model fits, and tables/figures is openly available at: https://github.com/JosephLWW/2PML-IRT-Estimation-MCMC-IRT-Deep-IRT-MAB-IRT.

Appendix A

Reproducibility

All hyperparameters, settings and configurations used for the studies are reported in this section.

DGP

Table A1
Hyperparameters for ***dgp.py****.*

Name	Value
seed	42
p_correct.D	1.7

MCMC-IRT

Table A2
Hyperparameters for ***mcmc_irt_v01.py****.*

Name	Value
tune	1000
draws	2000
chains	4
target_accept	0.95
max_treedepth	12
seed	42
priors	Same as 2

DEEP-IRT: (deep_irt_v02.py)

Table A3
Hyperparameters for ***deep_irt_v02.py****.*

Name	Value
HIDDEN_DIM	50
GAMMA	0.1
ALPHA_Le	0.2
ALPHA_He	0.8
ALPHA_Li	0.2
ALPHA_Hi	0.8
EPOCHS	300
LR	0.001
BATCH	512
SEED	42
optim	Adam
regularization	None
activation fx	TanH

MAB-IRT: (cucb_irt_v03.py)

Table A4

Hyperparameters for `cucb_irt_v03.py`.

Name	Value
`alpha0`	1.0
`eta`	0.03
`theta_clip`	3.0
`beta_clip`	3.0
`seed`	42
`extra_replay_passes`	2

Appendix B

Tables

Table B1

MCMC-IRT vs Deep-IRT (random assignment). Best metrics in bold

Assignment	Items per Test	Common Items (Total Items)	Nº Examinees (Total Examinees)	Method	RMSE	Pearson	Kendall
random	10	0 (100)	50 (500)	MCMC-IRT	**0.5961**	**0.8190**	**0.6205**
				Deep-IRT	0.7661	0.7065	0.5792
			100 (1000)	MCMC-IRT	**0.5020**	**0.8717**	**0.6866**
				Deep-IRT	0.6949	0.7585	0.6326
			500 (5000)	MCMC-IRT	**0.5242**	**0.8621**	**0.6831**
				Deep-IRT	0.7152	0.7443	0.6228
			1000 (10000)	MCMC-IRT	**0.5427**	**0.8533**	**0.6669**
				Deep-IRT	0.7385	0.7273	0.6103
		5 (55)	50 (500)	MCMC-IRT	**0.6334**	**0.7956**	**0.5845**
				Deep-IRT	0.7945	0.6844	0.5333
			100 (1000)	MCMC-IRT	**0.5049**	**0.8702**	**0.6828**
				Deep-IRT	0.6731	0.7735	0.6296
			500 (5000)	MCMC-IRT	**0.5429**	**0.8521**	**0.6668**
				Deep-IRT	0.7375	0.7281	0.6081
			1000 (10000)	MCMC-IRT	**0.5091**	**0.8709**	**0.6967**
				Deep-IRT	0.7008	0.7545	0.6482
	30	0 (300)	50 (500)	MCMC-IRT	**0.4119**	**0.9137**	**0.7505**
				Deep-IRT	0.4911	0.8794	0.6988
			100 (1000)	MCMC-IRT	**0.3579**	**0.9350**	**0.8019**
				Deep-IRT	0.4316	0.9069	0.7596
			500 (5000)	MCMC-IRT	**0.3584**	**0.9356**	**0.8060**
				Deep-IRT	0.4416	0.9025	0.7560
			1000 (10000)	MCMC-IRT	**0.3728**	**0.9307**	**0.7955**
				Deep-IRT	0.5038	0.8731	0.7397
		5 (255)	50 (500)	MCMC-IRT	**0.3987**	**0.9191**	**0.7665**
				Deep-IRT	0.4780	0.8858	0.7219
			100 (1000)	MCMC-IRT	**0.3838**	**0.9252**	**0.7782**
				Deep-IRT	0.4858	0.8820	0.7247
			500 (5000)	MCMC-IRT	**0.3669**	**0.9325**	**0.7982**
				Deep-IRT	0.4323	0.9066	0.7564
			1000 (10000)	MCMC-IRT	**0.3977**	**0.9212**	**0.7776**
				Deep-IRT	0.5653	0.8402	0.7237
	50	0 (500)	50 (500)	MCMC-IRT	**0.3298**	**0.9447**	**0.8138**
				Deep-IRT	0.3981	0.9207	0.7697
			100 (1000)	MCMC-IRT	**0.3005**	**0.9543**	**0.8378**
				Deep-IRT	0.3861	0.9255	0.7842
			500 (5000)	MCMC-IRT	**0.2999**	**0.9551**	**0.8420**
				Deep-IRT	0.3776	0.9287	0.7952
			1000 (10000)	MCMC-IRT	**0.3053**	**0.9533**	**0.8379**
				Deep-IRT	0.3773	0.9288	0.7960
		5 (455)	50 (500)	MCMC-IRT	**0.3683**	**0.9311**	**0.7937**
				Deep-IRT	0.4217	0.9111	0.7589
			100 (1000)	MCMC-IRT	**0.3042**	**0.9532**	**0.8397**
				Deep-IRT	0.3818	0.9271	0.7883
			500 (5000)	MCMC-IRT	**0.3017**	**0.9546**	**0.8425**
				Deep-IRT	0.3762	0.9292	0.7954
			1000 (10000)	MCMC-IRT	**0.3002**	**0.9550**	**0.8460**
				Deep-IRT	0.3707	0.9313	0.8007

Table B2

MCMC-IRT vs Deep-IRT (systematic assignment). Best metrics in bold

Assignment	Items per Test	Common Items (Total Items)	Nº Examinees (Total Examinees)	Method	RMSE	Pearson	Kendall
systematic	10	0 (100)	50 (500)	MCMC-IRT	**1.0326**	**0.4564**	**0.2845**
				Deep-IRT	1.1253	0.3668	0.1272
			100 (1000)	MCMC-IRT	1.0961	0.3866	**0.2372**
				Deep-IRT	**1.0162**	**0.4837**	0.1829
			500 (5000)	MCMC-IRT	1.3077	0.1419	0.1061
				Deep-IRT	**1.1038**	**0.3908**	**0.1622**
			1000 (10000)	MCMC-IRT	1.3396	0.1057	0.0783
				Deep-IRT	**1.0755**	**0.4217**	**0.1792**
		5 (55)	50 (500)	MCMC-IRT	1.0491	0.4388	**0.2794**
				Deep-IRT	**0.9776**	**0.5221**	0.2691
			100 (1000)	MCMC-IRT	1.1561	0.3176	0.1731
				Deep-IRT	**0.7831**	**0.6934**	**0.4268**
			500 (5000)	MCMC-IRT	1.3362	0.1041	0.0550
				Deep-IRT	**0.9538**	**0.5451**	**0.3899**
			1000 (10000)	MCMC-IRT	1.3448	0.0988	0.0722
				Deep-IRT	**0.8812**	**0.6118**	**0.4284**
	30	0 (300)	50 (500)	MCMC-IRT	**0.7179**	**0.7374**	**0.5136**
				Deep-IRT	1.0171	0.4827	0.2977
			100 (1000)	MCMC-IRT	**0.8452**	**0.6354**	**0.4242**
				Deep-IRT	1.1215	0.3711	0.1863
			500 (5000)	MCMC-IRT	1.1911	0.2881	0.1560
				Deep-IRT	**1.1666**	**0.3196**	**0.1570**
			1000 (10000)	MCMC-IRT	1.2566	0.2132	0.1125
				Deep-IRT	**1.0557**	**0.4427**	**0.2395**
		5 (255)	50 (500)	MCMC-IRT	**0.7360**	**0.7239**	**0.5051**
				Deep-IRT	0.9176	0.5790	0.3563
			100 (1000)	MCMC-IRT	0.9083	0.5790	**0.3649**
				Deep-IRT	**0.9008**	**0.5942**	0.3012
			500 (5000)	MCMC-IRT	1.2156	0.2584	0.1336
				Deep-IRT	**0.9405**	**0.5577**	**0.3304**
			1000 (10000)	MCMC-IRT	1.2473	0.2248	0.1209
				Deep-IRT	**0.9720**	**0.5276**	**0.3073**
	50	0 (500)	50 (500)	MCMC-IRT	**0.5883**	**0.8237**	**0.6173**
				Deep-IRT	0.9093	0.5866	0.3651
			100 (1000)	MCMC-IRT	**0.7076**	**0.7446**	**0.5284**
				Deep-IRT	1.0404	0.4588	0.2518
			500 (5000)	MCMC-IRT	**1.0801**	**0.4146**	**0.2380**
				Deep-IRT	1.1489	0.3401	0.1758
			1000 (10000)	MCMC-IRT	1.1867	0.2983	0.1533
				Deep-IRT	**1.0294**	**0.4701**	**0.2636**
		5 (455)	50 (500)	MCMC-IRT	**0.5989**	**0.8173**	**0.6143**
				Deep-IRT	0.7589	0.7121	0.4428
			100 (1000)	MCMC-IRT	**0.7000**	**0.7501**	**0.5299**
				Deep-IRT	0.8907	0.6033	0.3629
			500 (5000)	MCMC-IRT	1.0677	0.4279	0.2514
				Deep-IRT	**0.9633**	**0.5360**	**0.3225**
			1000 (10000)	MCMC-IRT	1.1849	0.3004	0.1616
				Deep-IRT	**0.9163**	**0.5802**	**0.3464**

Table B3

MCMC-IRT vs Deep-IRT (multi-population).

Common Items	μ_1	μ_2	σ^2	Method	RMSE	Pearson	Kendall
5	-0.3	0.3	0.7	MCMC-IRT	**0.3307**	**0.9465**	**0.8103**
				Deep-IRT	0.3651	0.9334	0.7869
	-0.5	0.5	0.5	MCMC-IRT	**0.3392**	**0.9447**	**0.8092**
				Deep-IRT	0.3785	0.9284	0.7842
	-0.7	0.7	0.3	MCMC-IRT	0.3942	0.9196	0.7637
				Deep-IRT	**0.3782**	**0.9285**	**0.7771**
	-0.9	0.9	0.1	MCMC-IRT	0.4411	0.8992	0.7545
				Deep-IRT	**0.3724**	**0.9306**	**0.7556**
0	-0.3	0.3	0.7	MCMC-IRT	**0.3956**	0.9196	0.7612
				Deep-IRT	0.4002	**0.9199**	**0.7683**
	-0.5	0.5	0.5	MCMC-IRT	0.5676	0.8241	0.6193
				Deep-IRT	**0.5406**	**0.8539**	**0.6671**
	-0.7	0.7	0.3	MCMC-IRT	0.7549	0.6860	0.5030
				Deep-IRT	**0.7505**	**0.7184**	**0.5317**
	-0.9	0.9	0.1	MCMC-IRT	**0.9565**	**0.5223**	**0.4375**
				Deep-IRT	1.1062	0.3882	0.3322

Table B4

MCMC-IRT vs MAB-IRT (random assignment). Best metrics in bold

Assignment	Items per Test	Common Items (Total Items)	Nº Examinees (Total Examinees)	Method	RMSE	Pearson	Kendall
random	10	0 (100)	50 (500)	MCMC-IRT	**0.5961**	**0.8190**	**0.6205**
				MAB-IRT	0.6369	0.7972	0.5996
			100 (1000)	MCMC-IRT	**0.5020**	**0.8717**	**0.6866**
				MAB-IRT	0.5515	0.8479	0.6643
			500 (5000)	MCMC-IRT	**0.5242**	**0.8621**	**0.6831**
				MAB-IRT	0.5651	0.8403	0.6608
			1000 (10000)	MCMC-IRT	**0.5427**	**0.8533**	**0.6669**
				MAB-IRT	0.5731	0.8358	0.6490
		5 (55)	50 (500)	MCMC-IRT	**0.6334**	**0.7956**	**0.5845**
				MAB-IRT	0.6907	0.7615	0.5535
			100 (1000)	MCMC-IRT	**0.5049**	**0.8702**	**0.6828**
				MAB-IRT	0.5657	0.8400	0.6491
			500 (5000)	MCMC-IRT	**0.5429**	**0.8521**	**0.6668**
				MAB-IRT	0.5876	0.8273	0.6449
			1000 (10000)	MCMC-IRT	**0.5091**	**0.8709**	**0.6967**
				MAB-IRT	0.5432	0.8524	0.6757
	30	0 (300)	50 (500)	MCMC-IRT	**0.4119**	**0.9137**	**0.7505**
				MAB-IRT	0.4940	0.8780	0.7189
			100 (1000)	MCMC-IRT	**0.3579**	**0.9350**	**0.8019**
				MAB-IRT	0.4314	0.9070	0.7820
			500 (5000)	MCMC-IRT	**0.3584**	**0.9356**	**0.8060**
				MAB-IRT	0.4395	0.9034	0.7871
			1000 (10000)	MCMC-IRT	**0.3728**	**0.9307**	**0.7955**
				MAB-IRT	0.4418	0.9024	0.7776
		5 (255)	50 (500)	MCMC-IRT	**0.3987**	**0.9191**	**0.7665**
				MAB-IRT	0.4696	0.8897	0.7475
			100 (1000)	MCMC-IRT	**0.3838**	**0.9252**	**0.7782**
				MAB-IRT	0.4709	0.8891	0.7511
			500 (5000)	MCMC-IRT	**0.3669**	**0.9325**	**0.7982**
				MAB-IRT	0.4324	0.9065	0.7817
			1000 (10000)	MCMC-IRT	**0.3977**	**0.9212**	**0.7776**
				MAB-IRT	0.4682	0.8904	0.7584
	50	0 (500)	50 (500)	MCMC-IRT	**0.3298**	**0.9447**	**0.8138**
				MAB-IRT	0.4399	0.9033	0.7798
			100 (1000)	MCMC-IRT	**0.3005**	**0.9543**	**0.8378**
				MAB-IRT	0.4207	0.9115	0.8133
			500 (5000)	MCMC-IRT	**0.2999**	**0.9551**	**0.8420**
				MAB-IRT	0.3991	0.9204	0.8251
			1000 (10000)	MCMC-IRT	**0.3053**	**0.9533**	**0.8379**
				MAB-IRT	0.4001	0.9200	0.8220
		5 (455)	50 (500)	MCMC-IRT	**0.3683**	**0.9311**	**0.7937**
				MAB-IRT	0.4664	0.8912	0.7675
			100 (1000)	MCMC-IRT	**0.3042**	**0.9532**	**0.8397**
				MAB-IRT	0.4269	0.9089	0.8063
			500 (5000)	MCMC-IRT	**0.3017**	**0.9546**	**0.8425**
				MAB-IRT	0.4029	0.9188	0.8230
			1000 (10000)	MCMC-IRT	**0.3002**	**0.9550**	**0.8460**
				MAB-IRT	0.3876	0.9249	0.8293

Table B5

MCMC-IRT vs MAB-IRT (systematic assignment). Best metrics in bold

Assignment	Items per Test	Common Items (Total Items)	Nº Examinees (Total Examinees)	Method	RMSE	Pearson	Kendall
systematic	10	0 (100)	50 (500)	MCMC-IRT	**1.0326**	**0.4564**	**0.2845**
				MAB-IRT	1.3864	0.0389	0.0011
			100 (1000)	MCMC-IRT	**1.0961**	**0.3866**	**0.2372**
				MAB-IRT	1.3890	0.0353	0.0392
			500 (5000)	MCMC-IRT	**1.3077**	**0.1419**	**0.1061**
				MAB-IRT	1.3884	0.0362	0.0189
			1000 (10000)	MCMC-IRT	**1.3396**	**0.1057**	**0.0783**
				MAB-IRT	1.3818	0.0453	0.0242
		5 (55)	50 (500)	MCMC-IRT	**1.0491**	**0.4388**	**0.2794**
				MAB-IRT	1.4825	-0.0989	-0.0959
			100 (1000)	MCMC-IRT	**1.1561**	**0.3176**	**0.1731**
				MAB-IRT	1.4886	-0.1079	-0.0673
			500 (5000)	MCMC-IRT	**1.3362**	**0.1041**	**0.0550**
				MAB-IRT	1.4075	0.0095	-0.0005
			1000 (10000)	MCMC-IRT	**1.3448**	**0.0988**	**0.0722**
				MAB-IRT	1.4104	0.0054	0.0084
	30	0 (300)	50 (500)	MCMC-IRT	**0.7179**	**0.7374**	**0.5136**
				MAB-IRT	1.3670	0.0656	0.0356
			100 (1000)	MCMC-IRT	**0.8452**	**0.6354**	**0.4242**
				MAB-IRT	1.3736	0.0565	0.0399
			500 (5000)	MCMC-IRT	**1.1911**	**0.2881**	**0.1560**
				MAB-IRT	1.3659	0.0672	0.0305
			1000 (10000)	MCMC-IRT	**1.2566**	**0.2132**	**0.1125**
				MAB-IRT	1.3700	0.0616	0.0330
		5 (255)	50 (500)	MCMC-IRT	**0.7360**	**0.7239**	**0.5051**
				MAB-IRT	1.4512	-0.0530	-0.0475
			100 (1000)	MCMC-IRT	**0.9083**	**0.5790**	**0.3649**
				MAB-IRT	1.5089	-0.1384	-0.1002
			500 (5000)	MCMC-IRT	**1.2156**	**0.2584**	**0.1336**
				MAB-IRT	1.4322	-0.0256	-0.0372
			1000 (10000)	MCMC-IRT	**1.2473**	**0.2248**	**0.1209**
				MAB-IRT	1.4904	-0.1106	-0.0852
	50	0 (500)	50 (500)	MCMC-IRT	**0.5883**	**0.8237**	**0.6173**
				MAB-IRT	1.3577	0.0783	0.0253
			100 (1000)	MCMC-IRT	**0.7076**	**0.7446**	**0.5284**
				MAB-IRT	1.3633	0.0706	0.0410
			500 (5000)	MCMC-IRT	**1.0801**	**0.4146**	**0.2380**
				MAB-IRT	1.3636	0.0704	0.0279
			1000 (10000)	MCMC-IRT	**1.1867**	**0.2983**	**0.1533**
				MAB-IRT	1.3593	0.0762	0.0346
		5 (455)	50 (500)	MCMC-IRT	**0.5989**	**0.8173**	**0.6143**
				MAB-IRT	1.3640	0.0698	0.0217
			100 (1000)	MCMC-IRT	**0.7000**	**0.7501**	**0.5299**
				MAB-IRT	1.4891	-0.1086	-0.0645
			500 (5000)	MCMC-IRT	**1.0677**	**0.4279**	**0.2514**
				MAB-IRT	1.4322	-0.0256	-0.0372
			1000 (10000)	MCMC-IRT	**1.1849**	**0.3004**	**0.1616**
				MAB-IRT	1.4974	-0.1212	-0.0862

Table B6

MCMC-IRT vs MAB-IRT (multi-population).

Common Items	μ_1	μ_2	σ^2	Method	RMSE	Pearson	Kendall
5	-0.3	0.3	0.7	MCMC-IRT	**0.3307**	**0.9465**	**0.8103**
				MAB-IRT	0.4143	0.9142	0.8063
	-0.5	0.5	0.5	MCMC-IRT	**0.3392**	**0.9447**	**0.8092**
				MAB-IRT	0.4538	0.8970	0.7788
	-0.7	0.7	0.3	MCMC-IRT	**0.3942**	**0.9196**	**0.7637**
				MAB-IRT	0.5374	0.8556	0.7072
	-0.9	0.9	0.1	MCMC-IRT	**0.4411**	**0.8992**	**0.7545**
				MAB-IRT	0.5401	0.8542	0.7251
0	-0.3	0.3	0.7	MCMC-IRT	**0.3956**	**0.9196**	**0.7612**
				MAB-IRT	0.5325	0.8582	0.7049
	-0.5	0.5	0.5	MCMC-IRT	**0.5676**	**0.8241**	**0.6193**
				MAB-IRT	0.7420	0.7247	0.5577
	-0.7	0.7	0.3	MCMC-IRT	**0.7549**	**0.6860**	**0.5030**
				MAB-IRT	0.9777	0.5220	0.4202
	-0.9	0.9	0.1	MCMC-IRT	**0.9565**	**0.5223**	**0.4375**
				MAB-IRT	1.2406	0.2304	0.2645

Table B7

Deep-IRT with ridge (L2) regularization vs Deep-IRT with no regularization (random assignment). Best metrics in bold

Assignment	Items per Test	Common Items (Total Items)	Nº Examinees (Total Examinees)	Method	RMSE	Pearson	Kendall
random	10	0 (100)	50 (500)	Ridge	0.7662	0.7064	**0.5797**
				No Ridge	**0.7661**	**0.7065**	0.5792
			100 (1000)	Ridge	**0.6949**	**0.7585**	**0.6327**
				No Ridge	**0.6949**	**0.7585**	0.6326
			500 (5000)	Ridge	**0.7140**	**0.7451**	0.6225
				No Ridge	0.7152	0.7443	**0.6228**
			1000 (10000)	Ridge	0.7567	0.7137	**0.6109**
				No Ridge	**0.7385**	**0.7273**	0.6103
		5 (55)	50 (500)	Ridge	0.7949	0.6841	0.5332
				No Ridge	**0.7945**	**0.6844**	**0.5333**
			100 (1000)	Ridge	**0.6728**	**0.7737**	**0.6299**
				No Ridge	0.6731	0.7735	0.6296
			500 (5000)	Ridge	**0.7362**	**0.7290**	0.6078
				No Ridge	0.7375	0.7281	**0.6081**
			1000 (10000)	Ridge	0.7043	0.7520	0.6475
				No Ridge	**0.7008**	**0.7545**	**0.6482**
	30	0 (300)	50 (500)	Ridge	**0.4908**	**0.8796**	**0.6988**
				No Ridge	0.4911	0.8794	**0.6988**
			100 (1000)	Ridge	0.4318	0.9068	**0.7600**
				No Ridge	**0.4316**	**0.9069**	0.7596
			500 (5000)	Ridge	0.4558	0.8961	**0.7561**
				No Ridge	**0.4416**	**0.9025**	0.7560
			1000 (10000)	Ridge	**0.4929**	**0.8785**	**0.7406**
				No Ridge	0.5038	0.8731	0.7397
		5 (255)	50 (500)	Ridge	**0.4777**	**0.8859**	**0.7222**
				No Ridge	0.4780	0.8858	0.7219
			100 (1000)	Ridge	**0.4833**	**0.8832**	**0.7252**
				No Ridge	0.4858	0.8820	0.7247
			500 (5000)	Ridge	0.4454	0.9008	**0.7568**
				No Ridge	**0.4323**	**0.9066**	0.7564
			1000 (10000)	Ridge	**0.5164**	**0.8667**	**0.7239**
				No Ridge	0.5653	0.8402	0.7237
	50	0 (500)	50 (500)	Ridge	**0.3979**	**0.9208**	**0.7707**
				No Ridge	0.3981	0.9207	0.7697
			100 (1000)	Ridge	**0.3839**	**0.9263**	**0.7856**
				No Ridge	0.3861	0.9255	0.7842
			500 (5000)	Ridge	**0.3742**	**0.9300**	**0.7957**
				No Ridge	0.3776	0.9287	0.7952
			1000 (10000)	Ridge	**0.3771**	**0.9289**	0.7946
				No Ridge	0.3773	0.9288	**0.7960**
		5 (455)	50 (500)	Ridge	**0.4216**	**0.9111**	**0.7593**
				No Ridge	0.4217	**0.9111**	0.7589
			100 (1000)	Ridge	**0.3812**	**0.9273**	0.7880
				No Ridge	0.3818	0.9271	**0.7883**
			500 (5000)	Ridge	**0.3740**	**0.9300**	**0.7956**
				No Ridge	0.3762	0.9292	0.7954
			1000 (10000)	Ridge	**0.3679**	**0.9323**	0.8003
				No Ridge	0.3707	0.9313	**0.8007**

Appendix C

Figures

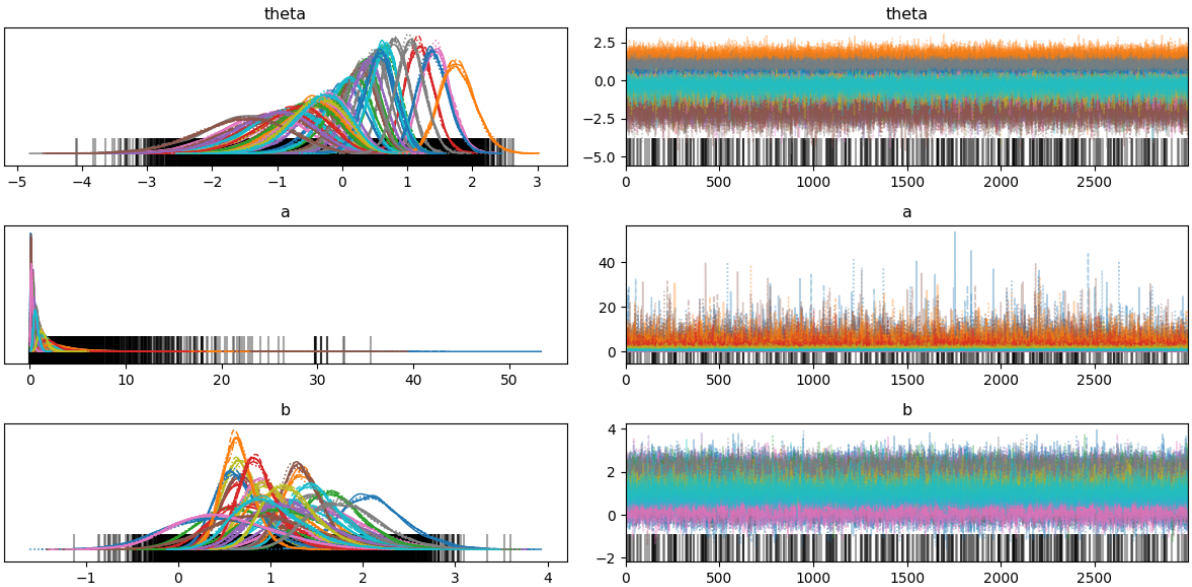

Figure C1

MCMC-IRT traceplot (Systematic Assignment Run)

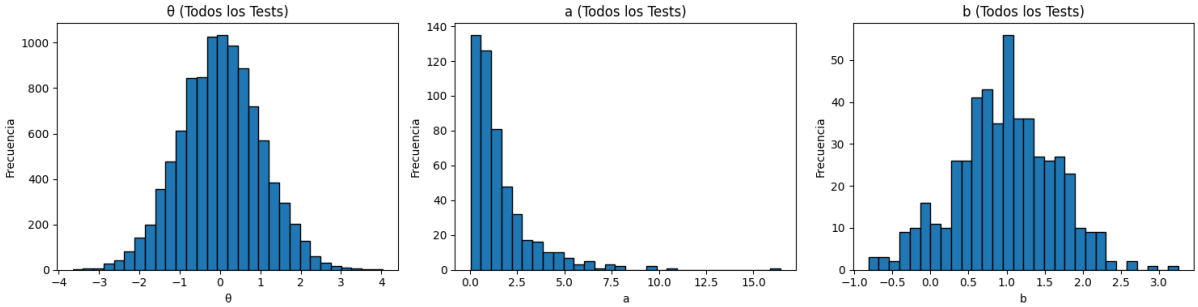

Figure C2

Distribution of the generated data after aggregating all tests

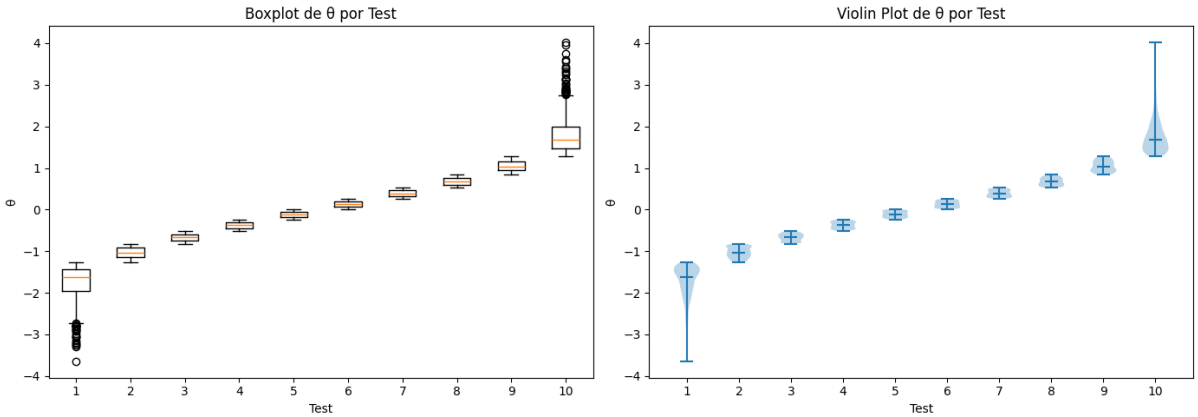

Figure C3

Distribution of the θ's for each test after rearranging under the systematic sampling regime