DEPARTMENT OF ELECTRICAL AND COMPUTER ENGINEERING

EEL-4920 – SENIOR DESIGN I

2025

Power Distribution Module

TEAM NUMBER 13

Carlos Almagro

Jose Correa

Daniel Picado

SENIOR DESIGN II Report

Submitted to:

Senior Design I Instructor: Professor Wilmer Arellano

Mentor: Constantinos L. Zekios

December 2026

ACKNOWLEDGEMENT

The team would like to thank Wilmer Arellano and Konstantinos Zekios for their much-needed advice and guidance in the continued development of this project. Their knowledge, feedback, and mentorship have significantly influenced the design and implementation of the Power Distribution Module. We would also like to thank the faculty and colleagues at FSAE who gave constructive feedback and allowed us to build our proposal into a successful submission.

ABSTRACT

The purpose of this Power Distribution Module (PDM) project is to provide a robust and programmable way to manage electrical power in a Formula SAE race car. By designing a module that replaces conventional fuses and relays, the PDM can offer precise electronic control for several power channels, while also improving safety, efficiency, and diagnostics. The PDM project period runs from August 26, 2024, to December 6, 2024. Major deliverables in this project will involve hardware design, firmware development and implementing CAN-based communication. This document will provide an introduction to the proposed design, an overview of the system functionality, an overview of specifications and project development milestones. By providing improved vehicle power management and fault detection, the PDM project will make the race car safer and more efficient during competition and practice, while also improving performance and reliability on the racetrack.

I. EXECUTIVE SUMMARY

The Formula SAE (FSAE) racing team at Florida International University recognized a common problem with conventional automotive power distribution architectures for competition vehicles. Existing solutions involve mechanical fuses and relays which are failure prone, difficult to troubleshoot in a racing environment where time is limited, and which do not provide any means for the driver or engineers to receive real-time data or information about electrical systems. This identified scope of issues prompted the requirement of the development of a programmable Power Distribution Module (PDM) that could advance electric system reliability, safety and diagnostic capability, while balancing a tight budget and weight requirements that are part of Formula SAE competitions.

The proposed PDM will use solid state, high-side MOSFET switches as a means of electronically switching and protecting each load circuit instead of mechanical fuses and relays. The proposed architecture represents a software configurable, compact, power module which will allow engineers to configure overcurrent thresholds, reset tripped circuits and log faults based on CAN bus data, without physically replacing components or manually resetting circuits. The limited form factor and lightweight PCB construction of the PDM makes it compact enough for the electric systems of a Formula SAE vehicle.

This design proposal provides the rationale, objectives, and a strategy for implementing the PDM project. The proposal will also address health and safety, environmental concerns, sustainability, manufacturability, and the potential for long-term learning as a result of this project. A structured development process allows for the PDM to go through the design, testing, and validation phase to ensure safe operation under real racing conditions. The team will determine if it is successful by meeting electrical performance benchmarks, successfully performing fault-tolerance testing and in-vehicle integration testing, and safely integrating with FSAE's safety standards.

By developing a cost-effective, reprogrammable, intelligent power distribution means to safely control electrical power in the FSAE race car, this PDM project will provide the racing team an improved level of reliability and efficiency when controlling electrical power in highly competitive racing environments during their events. The proposed PDM will solve a current engineering problem while also preparing the way for future innovations in electronics which are built by students for motorsport areas, showing a professional-level and scalable way of addressing the modern automotive world of power management and the future of motorsport.

II. Problem Statement

At the core of this engineering project lies a clear need to modernize and improve the electrical power distribution architecture of student-built race cars, particularly those used by the Formula SAE (FSAE) team at Florida International University. This need arises from repeated challenges experienced during development, testing, and competition challenges rooted in the continued use of traditional fuse and relay-based systems.

Our client, the FIU FSAE team, initially requested a solution that could address the time-consuming and error-prone process of diagnosing electrical issues during races. This expanded into a more ambitious goal: to design and implement a Power Distribution Module (PDM) that offers enhanced configurability, digital monitoring, and improved safety features—all affordable to student teams.

While cost-effective and robust under certain conditions, traditional automotive fuse boxes are inherently limited. They lack any form of data feedback, require manual reconfiguration, and are highly vulnerable to cascading failures caused by undiagnosed faults. Commercial PDMs solve these issues, but their high cost, often exceeding $1,000, makes them inaccessible to many university teams.

Our project proposes designing and developing a low-cost, software-configurable PDM that replaces mechanical fuses and relays with semiconductor-based switching (e.g., MOSFETs) and integrates current sensing, fault logging, and CAN-based communication. The system will reduce diagnostic time, improve reliability, and offer advanced control features that traditional solutions cannot match.

The FIU FSAE team has suffered multiple preventable electrical failures in past seasons. These failures highlight not only the technical limitations of the current system but also the opportunity to bring industrial-grade reliability and intelligence to a student project, bridging the gap between academic experience and real-world application.

A. Objectives

1. Safety

1. Ensure the system provides short-circuit protection and overcurrent response.
2. Electrically isolate high-power sections from the low-voltage logic system.
3. Protect components from inductive kickback using flyback diodes and safe switching.

2. Reliability and Accuracy

1. Replace electromechanical relays with solid-state devices to reduce failure rates.
2. Enable real-time current sensing and anomaly detection for every channel.
3. Ensure robust signal integrity in harsh EMI environments typical of race cars.

3. Configurability and Modularity

1. Make all output channels digitally configurable via software (no mechanical rewiring).
2. Provide a scalable design to support future additions or upgrades (e.g., telemetry).
3. Support CAN bus communication for compatibility with other vehicle ECUs.

4. User Experience

1. Deliver intuitive software for configuring and monitoring the system.
2. Provide clear visual fault indicators (e.g., LEDs, logging).
3. Create a compact and race-ready enclosure for easy installation in the vehicle.

B. Constraints

1. Cost
   - The whole system must cost significantly less than commercial alternatives <$300 total).
2. Power
   - Must operate from the vehicle's 12V supply and handle channel loads up to 20A.
3. Size
   - The system must fit within the limited spatial constraints of the FSAE chassis.
4. Interface
   - Must be compatible with mobile devices and/or laptops for configuration and diagnostics.
5. Durability
   - Must withstand vibration, temperature fluctuations, and other harsh automotive conditions.

III. Assumptions and Limitations

This section outlines the key assumptions and limitations that inform the design and implementation of our Power Distribution Module (PDM) for FIU's Formula SAE team. These factors define the project's scope and guide our development decisions, highlighting which design aspects are flexible and which are rigidly constrained by environmental, technical, or client-imposed factors.

A. Assumptions

The assumptions listed here reflect conditions that, while not strictly imposed by the FSAE team or bound by physical constraints, are necessary for keeping the project feasible and on schedule. These are subject to change as the project evolves, particularly in response to testing and integration of feedback.

- The STM32-based microcontroller selected will provide sufficient ADC resolution and peripheral support for current sensing, digital control, and communication.

- The electrical subsystems on the FSAE car will not draw more than 20A per output channel, allowing standard low-side switching to be used across the board.

- MOSFETs used as solid-state relays can handle load switching without significant thermal management beyond basic heat sinking and board layout.

- The system will be powered solely by the vehicle's 12V power supply with sufficient stability to support digital and analog components without complex regulation beyond buck/boost converters.

- The race car environment will not exceed an EMI noise level that compromises the integrity of CAN communication or ADC measurements, assuming adequate shielding and grounding practices are followed.

B. Limitations

The following limitations are imposed by the client (FIU FSAE) or dictated by physical, electrical, or financial constraints. These must be met for the PDM to be considered functional, safe, and valuable to the end user.

- The total dimensions of the PDM enclosure must not exceed 120 mm x 100 mm x 30 mm due to the limited mounting space within the FSAE chassis.

- The system must operate reliably in ambient temperatures ranging from -10°C to 85°C, which aligns with automotive environmental standards.

- The PDM must be built with a total cost not exceeding $300, including all electronics, enclosure, and connectors, to stay within the FSAE team's budget.

- The device must support real-time fault detection and current logging, which can shut off a channel within milliseconds of detecting an overcurrent.

- The system must interface with the CAN bus and optionally support Bluetooth or smartphone connectivity for configuration and diagnostics.

- The PDM must operate with a low quiescent current draw to preserve the vehicle's battery, ensuring minimal power usage in idle or sleep states.

IV. Needs Feasibility Analysis

A. Needs Analysis

To develop an effective and viable senior design solution, real-world engineering needs must be determined. In the case of our team's Formula SAE race car, a significant discrepancy exists in the reliability and diagnostics of our vehicle's electrical system. Through field exposure and client interviews, we recognized the need for an intelligent, modular, and inexpensive Power Distribution Module (PDM). This section describes how we conducted our needs analysis, from client interviews to benchmarking existing technologies, identifying unmet needs, brainstorming, and combining objectives and constraints that led to our project.

1. Client Interview

To better understand what the current system does well and where it falls short, we talked with several members of Panther Motorsports who regularly work on the car. FSAE race cars rely on key electrical systems like the ECU, ignition, fuel injection, cooling loops, sensors, and data logging. Like most teams, FIU still uses mechanical fuses and relays to control these circuits. They're cheap, easy to find, and simple to use, so they've stuck around. However, these traditional components have some real downsides. They tend to fail without warning, which can lead to unexpected shutdowns. Even a small electrical problem can cause significant delays in a racing environment, and time matters. Figuring out what went wrong can be slow and frustrating, which isn't ideal during testing or competition. All of this shows why there's a need for a more robust way to manage these circuits. A breakdown of the key traits can be found in TABLE I.

TABLE I. Attributes Obtained from Interviews with Panther Motorsports

Source	Attribute
Member	Fuses make it challenging to diagnose electrical faults quickly.
Member	Mechanical relays are prone to failure under vibration and heat.
Member	The system should isolate faults automatically to prevent further damage.
Member	The device should log fault events with time stamps and channel data.
Member	The electrical interface should be modular for quick replacement.
Member	The device should reduce wiring complexity and eliminate bulky harnesses.
Member	The system should be compatible with CAN-based diagnostics.
Member	The system should fit within a student team's budget.
Member	The PDM should allow software-based configuration rather than rewiring.
Member	The system must be compatible with existing vehicle components.

During one of the team's testing sessions, a relay failure resulted in an unexpected shutdown of the cooling fan. The team spent hours isolating the issue, but no diagnostics were available. Another case involved trying to add a new ignition pump, which caused a short circuit that ultimately fried the fuses and relays. Not only was time wasted, but this also highlighted critical gaps in our system's safety and reliability. The worst part is not understanding the cause; the issue recurs regularly.

2. Survey

The survey helps us determine what the motorsports team needs from the PDM and assess its marketability. Our design team developed a set of questions to gather the most relevant feedback from current and previous FSAE members. TABLE II displays the responses collected.

TABLE II. ATTRIBUTES OBTAINED FROM INTERVIEWS WITH PANTHER MOTORSPORTS

Source	Attribute
Survey	The PDM should be affordable for university teams.
Survey	The PDM should log faults and performance data for post-race analysis.
Survey	The PDM should detect and isolate shorts to protect the rest of the system.
Survey	The PDM should communicate with other ECUs via CAN.
Survey	Physical dimensions must conform to the limited space available in the race car.

These survey findings demonstrated consistency in fundamental requirements, including diagnostics, fault tolerance, and cost-effectiveness, and further supported the input gathered from interviews.

3. PDM Design Team Input

The Design team analyzed the client and survey attributes. This led to us brainstorming internal design goals. We identified features that can improve performance, usage, and reliability. The results are shown in TABLE III.

TABLE III. ATTRIBUTES OBTAINED: DESIGN TEAM

Source	*Attribute*
Team 13	The PDM should support CAN and Bluetooth communication.
Team 13	The PDM should have an interactive GUI, or we can base the design on diagnostics.
Team 13	The PDM should have reverse-polarity protection.
Team 13	The PDM should support real-time current sensing on all outputs.
Team 13	The PDM should use solid-state relays instead of mechanical ones.

4. Combined Project Attributes

After gathering all the information from the client, survey, and design teams' input, we generated a list of attributes seen in TABLE IV. We categorized them by objective, features, marketability, ease of use, safety, and constraints.

TABLE IV. THE COMBINED ATTRIBUTES FROM ALL INFORMATION GATHERED

Source	Attribute	Type
Member	The system must be compatible with existing vehicle components	Constraint
Member	The system should isolate faults automatically.	Objective
Member	The PDM should allow software-based configuration.	Feature
Member	The system should be compatible with CAN-based diagnostics.	Feature
Survey	The PDM should log faults for post-race analysis.	Marketability
Survey	The PDM should detect and isolate shorts.	Safety
Survey	The PDM should be under $200.	Constraint
Survey	Physical dimensions must conform to the limited space available in the race car.	Constraint
Team 13	The PDM should use solid-state relays.	Feature
Team 13	The PDM should have reverse-polarity protection.	Safety
Team 13	The PDM should have an interactive GUI or web-based design.	Ease of Use
Team 13	The PDM should support CAN and Bluetooth communication.	Ease of Use

By combining the results of client interviews, questionnaires, and feedback from the design team, we arrive at the results as shown in Table IV. Based on our discussions and the surveys we reviewed, we can now provide a detailed and condensed description of our client's needs and desires. We can conduct a comprehensive needs analysis and define the project problem statement and objectives.

5. Problem Statement

The FIU Formula SAE team continues to experience unnecessary electrical issues due to using conventional methods, such as fuse and relay-style power systems. These older components lack diagnostics, are susceptible to failure because of vibration and heat, and are hard to troubleshoot in competition.

Our team is designing a low-cost, software-programmable Power Distribution Module (PDM) that replaces mechanical relays with solid-state switches to address this. It will feature real-time current sensing, reverse-polarity protection, and CAN-based communication. The module will reduce diagnostic time, improve reliability, and maximize vehicle performance.

Present-day commercial PDMs are too expensive for most university teams. Our solution offers advanced functionality such as fault logging, modularity, and seamless integration at an affordable price for students.

6. Objectives

1. Safety

    1. Ensure the system provides short-circuit protection and overcurrent response.
    2. Electrically isolate high-power sections from the low-voltage logic system.
    3. Protect components from inductive kickback using flyback diodes and safe switching.

2. Reliability and Accuracy

    1. Replace electromechanical relays with solid-state devices to reduce failure rates.
    2. Enable real-time current sensing and anomaly detection for every channel.
    3. Ensure robust signal integrity in harsh EMI environments typical of race cars.

3. Configurability and Modularity

    1. Make all output channels digitally configurable via software (no mechanical rewiring).
    2. Provide a scalable design to support future additions or upgrades (e.g., telemetry).
    3. Support CAN bus communication for compatibility with other vehicle ECUs.

4. User Experience

    1. Deliver intuitive software for configuring and monitoring the system.
    2. Provide clear visual fault indicators (e.g., LEDs, logging).
    3. Create a compact and race-ready enclosure for easy installation in the vehicle.

7. Constraints

    1. The PDM should meet budget requirements.
    2. Physical dimensions must conform to the limited space available in the racecar.
    3. The system must be compatible with existing vehicle components (ECU).

Survey and meeting feedback determined the five main requirements: diagnostic capability, fault tolerance, integrability, affordability, and end-user configurability. These primary elements are the foundation of the design team and will drive the design decisions for the project. We laid the groundwork for a low-cost and reliable solution for the FIU Formula SAE team by listening to user frustration and translating that into goals and constraints.

The needs analysis revealed a clear set of requirements for a modern Power Distribution Module. These are real-time fault tolerance, solid-state switching, software configurability, clear compatibility with existing vehicle requirements, and CAN communication.

B. Needs Specifications

After carefully analyzing the client's specifications, the design continues translating those qualitative goals and constraints into final, measurable specifications. These engineering specs are objective parameters that will guide the Power Distribution Module's development, testing, and certification (PDM). By establishing clear parameters, we can ensure that our solution not only addresses the specific pain points we have identified as being of interest to the FIU Formula SAE team but also complies with existing usability, performance, and safety standards. The specifications must also enable the system to compete with existing student-built PDMs, with

comparable functionality for a fraction of the price. This section presents the most critical technical specifications derived from the needs analysis. It summarizes them in TABLE V, which outlines the fundamental quantifiable objectives that will guide our design selections.

TABLE V. SPECIFICATIONS

Objective(s)	Specifications	Justification
1.1, 1.2	Detect faults and isolate affected channels within ≤ 1 ms	Ensures safety and minimizes damage during short circuits or overloads.
1.3	Reverse-polarity protection on the input supply and outputs	Prevents damage during improper wiring or battery connection.
2.1, 2.2	Real-time current sensing on all 12 output channels	Enables continuous monitoring and fault detection at the channel level.
2.3	Must maintain stable operation in high-vibration and high-heat conditions	Ensures reliability during race events under extreme physical conditions.
3.1, 3.3	Fully configurable via USB/CAN interface with supporting GUI or Web frame	Simplifies setup, fault analysis, and system tuning without rewiring.
3.2	Must support CAN 2.0B communication protocol	Enables integration with ECU and telemetry systems in the car.
4.1, 4.3	GUI or web frame display voltage, current, and fault flags per channel in real time	Improves user experience and enables live diagnostics and fast recovery.
4.2	Log at least 50 fault or status events with timestamps	Supports post-race diagnostics and system debugging.
-	Input voltage range: 9V–18V DC	Compatible with automotive 12V systems, including load variations.
-	Total material and manufacturing cost must not exceed $300	Ensures affordability for student teams.
-	Dimensions must not exceed 100 x 100 x 25 mm	Fits the tight packaging constraints of the Formula SAE chassis.

The needs specification phase is critical in transitioning from conceptual goals to actionable engineering criteria. We have created a foundation that guides every aspect of our Power Distribution Module's development by converting client feedback, design objectives, and real-world constraints into measurable parameters. These specifications ensure that our design remains focused, feasible, and aligned with the operational demands of a high-performance racing environment. Each requirement illustrates meticulous attention to innovation versus practicability, from communication standards and fault isolation speed to physical size and cost limitations. As the project proceeds into the prototyping and implementation stages, these specifications will serve

as a template to gauge success and ensure the finished product operates as intended by the FIU Formula SAE team and the overall student racing community.

C. Feasibility Analysis

The team conducted a feasibility analysis to determine if the proposed design for the Power Distribution Module (PDM) is achievable and practical. Based on the questions asked, the assessment conducted evaluates potential challenges that could arise during the development phase and identifies how the team can alleviate those issues. Each category of the feasibility assessment — Technical, Resource, Economic, Schedule, Legal, Marketing, and Cultural — was evaluated using a weighted scoring system. Attributes within each category were assigned scores from 1.0 to 5.0, where a score of 1.0 indicates that the requirement is nearly unattainable, and a score of 5.0 means that it is easily attainable. Scores within each category were averaged to provide a clear indication of feasibility.

1. Technical Feasibility

Technical feasibility helps the team determine whether the necessary technology for the project is available. By verifying that the PDM's essential components exist, are available, and determining whether any new solutions are required, Table VI enables the team to identify the crucial technology and solutions. The team obtained a score of 4.8, making the technical side very obtainable.

TABLE VI. TECHNICAL FEASIBILITY

Attributes	Score	Justification	Solution
Does technology exist?	5.0		
Is it available locally?	4.2		
Can it be obtained easily?	5.0		
Are new inventions required?	5.0		
Total	19.2	-	-
Average	4.8	-	-

D. Marketability

The more a product appeals to consumers, the more marketable it is. The Power Distribution Module would attract numerous universities to the Formula SAE competition in Michigan. In the competitive collegiate motorsport environment, every piece of a race car is essential; some bring you to the finish line, and others stop you from doing so. Many smaller universities would like to use a PDM but lack the funds to purchase a commercial one. This is where the cheap alternative from our design team comes in. The intelligent PDM provides advanced electrical diagnostics, fault protection, and configurability by offering a low-cost, innovative, modular system. This section examines the marketability of our solution in terms of its relevance, commercial potential, and benefits compared to other options.

1. Feedback

- Florida International University:

For the Panther Motorsports team, the Power Distribution Module being designed can be a game changer. Traditional automotive fuses and relays tend to fail due to vibration and heat, and provide no feedback once faults occur, which can even ruin other essential pieces. Our PDM addresses these issues using solid-state switching components, such as MOSFETs, with real-time current sensing and fault-logging capabilities. After conducting meetings with former and current members of the motorsports team, they all said it would be beneficial.

- Kettering University:

A student at Kettering University had a similar idea, focusing on the safety and reliability of Formula SAE electrical systems. Figure 1 shows Kettering's Facebook post about Brayden Jones, who redesigned a Brake System Plausibility Device circuit board with an important safety feature for electronic throttle control. His solution met a reliability issue: extreme braking while the throttle is open shall require safe power-down of all possible affected systems. Since the implementation of this design in 2023, the team has reported no reliability failures related to this circuit, thereby significantly improving safety and performance. [1]" Although they are different components, both BSPD and Power Distribution Modules are critical for the electrical control and diagnostics of student-built race cars. The success of Jones' student-designed safety board establishes the marketability and influence of custom-built, in-house solutions for FSAE teams. It supports our view of building a price-conscious, sturdy, and smart one by demonstrating that reliable, student-built alternatives to expensive commercial systems can work.

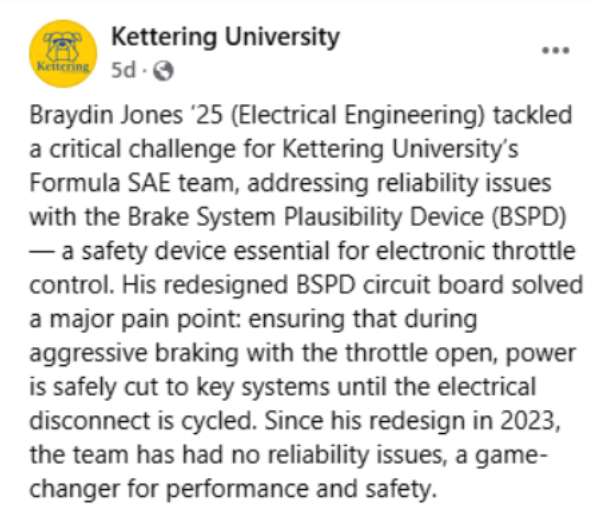

FIGURE I. OFFICIAL FACEBOOK PAGE OF KETTERING UNIVERSITY

- MoTec:

According to a MoTeC dealer's official website, the PDM15 offers safe and cutting-edge power control for motorsport applications [2]. Still, at its very high price of well over $1,800, it is unaffordable for all but a few student teams. Likewise, Ecumaster's PMU-16 offers professional-level diagnostic function and CAN integration, but its price of well over $1,000 remains inaccessible to small racing teams. While researching solutions, we found a Reddit post wherein a member of Maua Racing, a Brazilian Formula SAE team, had written: "I am from Maua Racing, Brazilian FSAE team. Looking for alternative solutions for a programmable power distribution module. They used to have a MoTeC PDM-30, but it broke. Do you guys have alternatives available on the market?" [3]. This transaction highlights two key points: first, FSAE teams are already willing to spend top dollar on high-end PDMs, even if they are expensive, in line with strong market demand; second, even the costliest ones will eventually fail or become obsolete, opening the door for cheaper and interchangeable alternatives.

2. Fundraising strategy

A methodical fundraising plan exists to back the development and testing stages of our student-crafted Power Distribution Module (PDM). The primary goal of this fundraising effort is to raise sufficient funds to produce and validate complete, working prototypes. A single unit is expected to cost about $200 in total. The pricing includes assembly, components, testing, and packaging processes. The design group will implement multiple outreach programs to secure funding for this project.

- University Support and Sponsorship

The first source of funding will be support provided by the university. Allocating some financing from the Panther Motorsports budget. Most significantly, the team has access to Panther Motorsports' fabrication shop, which has the required tools, electrical benches, and a body shop on-site. Without using contracted labor or incurring exorbitant costs for off-site specialized services, we can develop, test, and construct prototypes thanks to our on-site facilities. This keeps the PDM within performance criteria while staying within our budget by efficiently reducing production costs and streamlining our development timeframe. Collaborating with the vehicle integration team also enables us to test the module immediately in a real-world setting.

- FIU Community Fundraising Event

The team will sponsor a fundraising event on the FIU campus, and you can participate. The in-person fundraising event will serve two purposes: raising funds for the project and raising awareness of the technical challenges associated with participating in a Formula SAE competition. The event will feature a fundraising table where guests can learn about the Power Distribution Module (PDM), see a demo unit, and meet the engineers who developed the design. Additionally, while the motorsports team develops and captures their requirements process, they can raise awareness about the project, which is a win-win for the motorsports and development teams!

To engage the audience:

- Food and refreshments: Snacks and drinks will be available. Proceeds go directly toward PDM design and the motorsports team.
- Donation Station: People who stop by can donate any amount and will receive a small thank you gift (e.g, sticker, keychain, pencils, pens, notebooks, shirts, or a hat)
- Test drive raffle: For every $10 donated, you will be entered into a raffle. The winner gets to be the driver for the first test drive of the year.

- Kickstarter

The team will launch a Kickstarter campaign with a target funding goal of $ 1,200, enough to make four prototypes, with a bit of a buffer for other testing overhead. The Kickstarter campaign will feature a promotional video that explains the problem (the high cost and lack of reliable commercial PDMs), our solution, and its impact on student teams. The rewards tier structure is as follows:

- $5: Thank you message, and your name on our GitHub repo.
- $25: Access to beta software and progress updates every week.
- $100: Receive one fully assembled PDM board (first-come basis)

- $250: One Complete kit (PDM + connectors + USB cable + linking instructions)

3. Technology Overview – STLabs

We listed the technological components of the STLab PDM in TABLE VII [4]

TABLE VII. STLABS

Part Name	Technology Used	Functionality
Teensy 4.0	ARM Cortex-M7, 600 MHz, C++ via Arduino IDE	Central logic control with CAN support and GPIO flexibility
Solid-State Relays	Panasonic CP1A-12V Automotive Relays	Durable, automotive-grade channel switching
Current Sensors	ACHS-7124 Hall Effect Sensors	Measures -50A to 50A; analog output proportional to current
CAN Interface	Native CAN on Teensy + XT30 Connectors	Enables ECU communication and logging
Power Supply	TPS562209 SMPS (TI)	Converts car voltage to stable 5V; powers logic and sensors
Fuse Holders	Keystone 3555-2 and 3560	Supports channel fusing and crash tolerance
Connectors	XT30PW	Spark-resistant, high-current connectors for output channels
Software Interface	C++ Embedded via Arduino	Allows CAN logic, diagnostics, and fault routines

4. System Description - STLabs

The student-built PDM has nine output channels, a solid-state relay fuse, and a current sensor. The core of the design is based on a Teensy 4.0 microcontroller that performs real-time monitoring and logic for all channels. The Teensy receives current readings from an ACHS-7124 current sensor, evaluates each current reading for overcurrent or fault conditions, and switches relays if required to respond to the faults. The readings are logged and sent to the ECU (engine control unit) via CAN (Controller Area Network). There is a switch-mode power supply (SMPS) for efficient voltage regulation, and each output is customizable with XT30 connectors for simple access [4]. Figure 2 shows the block diagram for the workings of the STLabs-built Power Distribution Module.

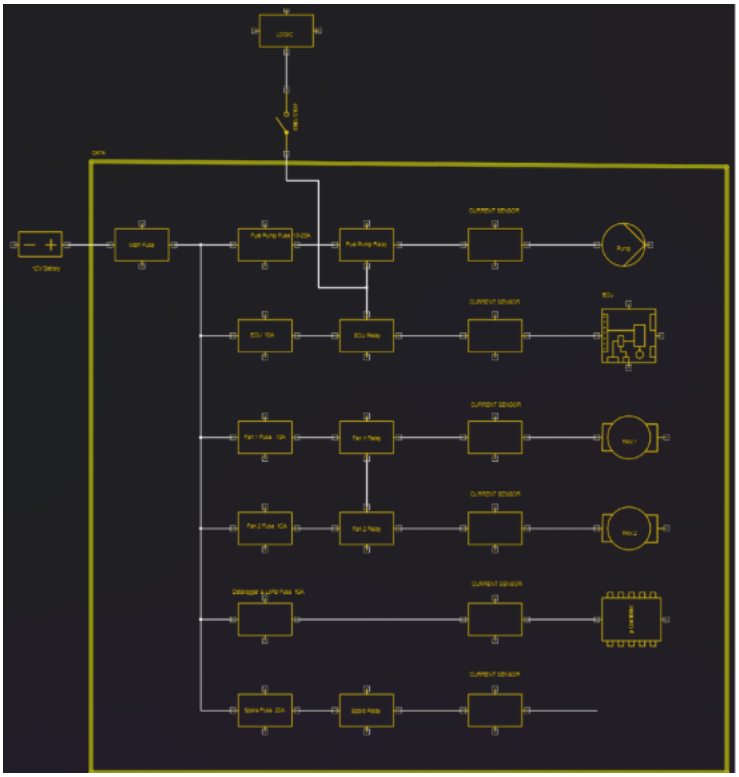

Figure II. Block Diagram [4]

5. Marketability

We have thoroughly researched similar products and targeted consumers—Formula SAE (FSAE) teams. We provided a list of significant takeaways required to launch a successful fundraising campaign to support our student-built Power Distribution Module (PDM). These insights are derived from other successful student-developed systems and the consistent funding and logistical challenges teams encounter when using expensive commercial alternatives. Using insights from our research and analyzing peer projects, we can create a campaign that provides financing, generates awareness, and validates the need for our device in the real world.

- **Objective:** It's critical to establish a realistic fundraising goal that covers all the expenses of the prototypes. If a funder utilizes a website like Kickstarter and doesn't meet its minimum financing goal, they will not be paid. This suggests that the goal should be both realistic and aspirational. After completing our bill of materials, we concluded that a plausible and achievable target of $600 would enable us to manufacture a minimum of a few fully functional devices, thoroughly test them for functionality, and document our procedure.

- **Reward:** Kickstarter's reward system allows us to offer backers various incentives for financial support. Making it essential to provide appealing incentives. We are raising funds for a prototype and not the manufacturing stage. These are the rewards:

  - $5: Thank you message, and your name on our GitHub repo.

  - $25: Access to beta software and progress updates every week.

  - $100: Receive one fully assembled PDM board (first-come basis)

  - $250: One Complete kit (PDM + connectors + USB cable + linking instructions

- **Creating Video:** Every successful fundraiser has a video explaining the problem and how their project solves it.

- **Inspire donations:** To generate support for the fundraiser, we intend to utilize Monroe's Motivated Sequence, a persuasive organizational pattern that creates urgency and provides a solution. The first step will be to identify the problem: most FSAE teams encounter issues with outdated and faulty electrical systems. The next step will be to describe our PDM as the solution—affordable, designed by students, and built for competition. Then, we will use visuals and often a story to help illustrate the difference that this device can make in performance and reliability. Finally, we invite the audience to support innovation and help us develop our design by donating.

In conclusion, there is a clear market for our student-designed Power Distribution Module. Formula SAE teams need an affordable, reliable, intelligent power distribution solution that maintains performance. We spoke to competitors, engaged with the community, and developed a comprehensive technology plan to demonstrate that our design addresses a significant market need. Once again, the investment in campus resources, building in-house fabrication, and the capability to raise funds in a way that fosters connections within the engineering community enables affordable costs and connections to support team building.

VI. Risk Analysis

During the planning and research phase, a reasonable risk analysis assessment is vital. Risk analysis evaluates potential future obstacles that could impact the success of the Power

Distribution Module (PDM) project and provides a realistic assessment of how to address these challenges. By assessing risk early in the development process, the team can prepare for potential issues that could lead to delays, technical problems, or cost overruns. Risks that could harm the project fall into various categories, including technical challenges, resource limitations, budget constraints, scheduling uncertainties, cultural factors, legal considerations, and marketability.

The team developed a structured approach to categorize each potential risk. After evaluation, the possible impact on the project's timeline, budget, and overall success is better understood. Risks with a high likelihood of causing disruptions require more attention and monitoring, while lower-level risks don't need much attention but should still be acknowledged and controlled.

The following list summarizes the primary risks associated with the PDM project, categorized under seven key areas:

1. Technical

T.1 Sourcing specific electronic components such as MOSFETs, microcontrollers, or current sensors.

T.2 Complexity of programming the desktop application for fault detection and diagnostics, potentially causing delays or incorrect fault reporting.

T.3 Errors during wiring or incorrect configuration of sensors and PDM settings leading to inaccurate readings or module failure.

1. Resource

R.1 Building the PCB may incur unexpected costs due to tariffs or international fabrication fees.

R.2 Component shortages, especially MOSFETs and microcontrollers, could delay production.

2. Economic

E.1 Exceeding budget.

E.2 Damaged hardware.

3. Schedule

S.1 Procrastination or poor time management leading to missed development milestones.

S.2 Delays caused by component failure or delivery lead times.

4. Cultural

C.1 Low social acceptance

5. Legal

L.1 Lack of awareness regarding standards or regulations affecting the project.

6. Marketing

M.1 Marketing to appealing audiences.

M.2 Making the product affordable and efficient enough to compete with other companies

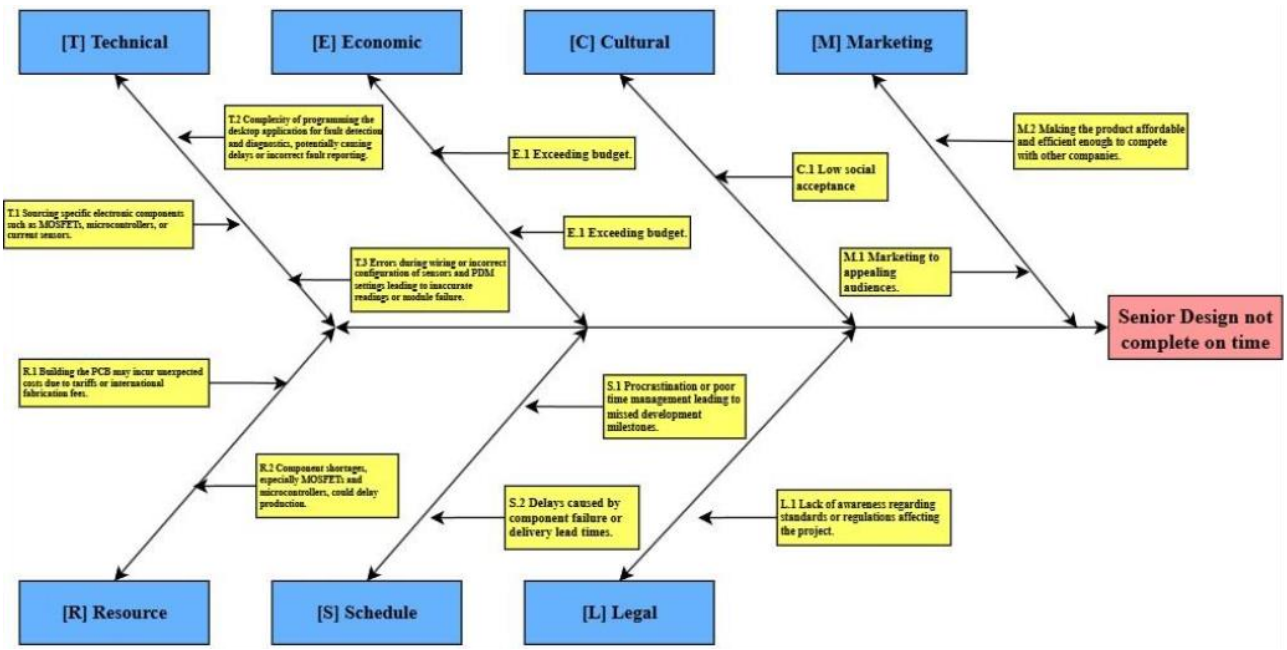

FIGURE III. FAULT TREE

Fault tree analysis is used to identify the risk in each part of the feasibility analysis. Figure III. demonstrates the fault tree analysis. In technical terms, we run the risk of not being able to source components such as MOSFETs, microcontrollers, or current sensors. We also have a potential issue with the complexity of programming the desktop application for fault detection. Any errors during wiring or incorrect sensor configuration may lead to inaccurate readings or module failure. For resources, the first risk we may encounter goes hand in hand with the first technical issue: building the PCB may incur unexpected costs due to tariffs or international fabrication fees. The second issue is component shortages, especially for MOSFETs and microcontrollers, which could

delay production. In economics, we run the risk of going over budget or damaging hardware that may need to be replaced during the development process. Scheduling risks include procrastination or poor time management, leading to missed development milestones, and delays caused by component failure or extended delivery lead times. In culture, we have a small risk that the FSAE culture may not accept the device. A potential legal risk is a lack of awareness regarding standards or regulations that affect the project. Finally, marketing imposes the risk of appealing to a targeted audience due to poor exposure, while also making our product affordable and efficient enough to compete with other companies.

Using the information provided by the fault tree analysis, the team can conduct a risk assessment with a Risk Exposure Matrix. Table XVII shows the risk exposure matrix. The previously defined risks are categorized by importance and likelihood of happening. Level I risks are negligible. Level II risk requires minor attention. Level III risk requires the team to manage the issue actively. Level IV risk requires immediate attention and must be addressed promptly.

TABLE VIII. RISK EXPOSURE MATRIX

Likelihood of Occurrence				
	Very likely	Possible	Unlikely	Key
Level IV	[T1] [R1] [R2]		[M2]	Disastrous
Level III		[T2] [T3] [E2]		High
Level II	[S2]	[E1] [M1]	[S1]	Moderate
Level I		[L1]	[C1]	Low

Table XVII exposes the primary risk factors that can be detrimental to the project. The main risks the team can face are sourcing vital components due to shortages and tariffs. The team can resolve issues related to the complexity of programming the desktop application and setting configurations, as well as errors during wiring, by researching and implementing solutions. It is unlikely that the team will be unable to market the product. I also don't see how our design will be culturally accepted. The team members are on top of the task, so procrastination is not an issue that could arise. The team will ensure the design meets every legal requirement.

Table XVIII outlines actions that can be taken to mitigate the risks involved in the Risk Exposure Matrix. The most hurtful risks are included in the resources and technical sections. For both, acquiring components may be challenging, and if the hardware becomes damaged, obtaining a replacement will be difficult and may consume a significant amount of time.

TABLE IX. SOLUTIONS TO MINIMIZE RISKS

Actions	
C1	Ask FSAE participants how they feel about the device.

S1	Create Schedule and stay on top of task to meet project deadline.
L1	Research standards and regulations for PDM.
E1	Monitor the bill of materials at every project milestone. Maintain a 10% budget contingency.
M1	Survey possible target audience.
T2, T3, S2	Allocate extra time for troubleshooting.
E2	Handle hardware with extreme caution and order extra.
T1, R1, R2	Pre-order critical components and identify multiple suppliers.

The team identified risks during the construction of our device that need to be carefully monitored. Primary risks include T1, R1, and R2, which involve acquiring essential parts on time to minimize the chance of not obtaining them at all. E2 is handling the parts well enough to avoid wasting time waiting for a new part and to save money. Finally, S2 ensures that enough time is allocated for troubleshooting and method research. By identifying the highest risks, we have constructed our next steps to ensure these risks don't become a reality in the development of our product.

VI. Operating Environment

It is essential to understand the environment in which a product will be used to ensure it works safely and reliably. Our Power Distribution Module (PDM) is built to fit into a Formula SAE race car, which brings some unique challenges. These include constant vibrations, changing temperatures, electromagnetic interference (EMI) from other electronics, and the tight space inside the car's electrical box. These include mechanical vibrations, fluctuating temperatures, exposure to EMI from different subsystems, and space constraints within the vehicle's electrical enclosure.

The PDM will be mounted within the low-voltage electronics bay of the racecar adjacent to the vehicle's accumulator, ECU, and other control modules. This compartment is semi-enclosed and ventilated, with passive airflow. Although not subject to extreme outdoor weather, the environment may experience internal heat buildup reaching 85°C, particularly under full-race conditions.

Mechanical vibrations from rough roads and engine vibrations are significant factors we had to consider. The PDM is mounted using shock-absorbing standoffs on an internal bracket to help reduce long-term wear and avoid issues like cracked solder joints. The PCB design also takes this into account. We chose low mass surface mount components and reinforced the high current traces to handle the stress better.

Electromagnetic interference (EMI) from the motor inverter, telemetry systems, and other switching electronics is also anticipated. As such, the PDM's signal and power traces are isolated with adequate ground planes, and the analog sensing circuits are protected with ferrite beads and RC filtering.

To summarize, the PDM is expected to operate within the following environmental parameters:

- Ambient temperature: 10°C to 85°C
- Relative humidity: < 85%, non-condensing
- Vibration exposure: continuous, variable, race-induced
- EMI presence: moderate to high (shielded)

Design decisions, including component derating, board isolation, and robust mechanical mounting, have ensured the PDM remains functional and accurate throughout these conditions.

VII. Intended User(s) and Intended Use(s)

Understanding who will use the product and for what purpose helps focus development efforts on core functionality and usability. Our PDM is built to serve student engineers, vehicle technicians, and design teams in competitive or educational motorsport environments.

A. Intended User

The main people using this system are the electrical engineers and techs who build, test, and maintain Formula SAE cars. That usually means university students and their faculty advisors working with limited budgets, tight deadlines, and strict competition rules. Our PDM is intended to make their jobs easier by improving diagnostics, cutting down on time spent troubleshooting,

and getting rid of old-school mechanical fuses and relays that can be unreliable or hard to work with.

In addition to student users, other engineering teams such as those in collegiate EV conversion projects, robotics platforms, or small electric vehicle startups may also benefit from our design. Because of its configurability and low cost, the system can be adapted to serve various educational or prototyping needs. Future users could include hobbyists or educators using our PDM as a teaching tool to demonstrate embedded systems design, digital control, or automotive networking via CAN.

B. Intended Use

Our product is intended to manage and monitor low-voltage DC power distribution within electric vehicles. Specifically, it acts as a central control unit for switching, protecting, and logging activity across subsystems such as cooling pumps, lights, sensors, and ECUs. Each channel can be digitally configured, and if a fault, such as an overcurrent or short circuit, occurs, the system logs the event and shuts down the affected output.

The PDM is also designed to work as a live diagnostic tool. Using CAN or Bluetooth, it can send fault data, voltage levels, and current readings to a laptop or mobile device, giving engineers a real-time look at what's happening in the system.

Overall, the goal is to make racecar electrical systems safer and easier to work on, especially in situations where every second and every bit of data matters. Whether it's catching unexpected issues during a test run or tweaking power settings before a race, users can count on the PDM for reliable performance and up-to-date info.

VIII. Background

Traditionally, racing vehicles contain a fuse box that controls the 12 V battery power before entering the system electronics. The main goal of the fuse box is to control the input of 12 V via electromechanical relays and fuses, which control the current flow. The benefits that lie in a traditional fuse box are:

- Low cost – ultimately, a fuse box is a cheap alternative to distributing clean and safe power.
- Reliability – for the most part, a fuse box's reliability is high because it is an electromechanical system, and vibrations could abuse it without breaking easily.
- Availability – fuses and electromechanical fuses are sold everywhere and are easily sourced.

These advantages still don't undermine the cons that come with the fuse box. Here are some that are deferential:

- No absolute control – there is no feedback from the Fusebox to understand how power behaves throughout the system.
- Configurable – fuse boxes aren't configurable to a particular specification that has been encountered. Fuses are only sold by multiples of 5, and relays can vary in FOS.
- Mechanical – Fuse boxes are hard-wired, meaning a particular configuration will stay the same; inputs and outputs are configurable and hard-wired unless you remake the connections.
- Load – electromechanical components provide a heavy load when closed. When a relay is closed, it can provide anywhere from 100 mA to 150 mA of draw. This could quickly add to a 1A load
- Lack of data – fuse boxes don't provide data. They are static electrical components with no feedback from the ECU.

Over the years, a power distribution solution that is easily configurable and does not require mechanical components has been needed. This allows engineers to waste less time with physical inspections and handle everything in seconds.

Race teams started to use Power Distribution Modules to avoid the cons seen with fuse boxes. Power distribution modules consist of semiconductors that replace traditional electromechanical components seen in the fuse box. The power distribution module also provides feedback on power outputs that add a layer of observability. Outputs are easily configurable through programming since semiconductors do not follow the same properties as electromechanical components. In the following paragraphs, the proposal will discuss the differences between the components of a traditional fuse box and a power distribution module.

ELECTRICAL-MECHANICAL RELAY

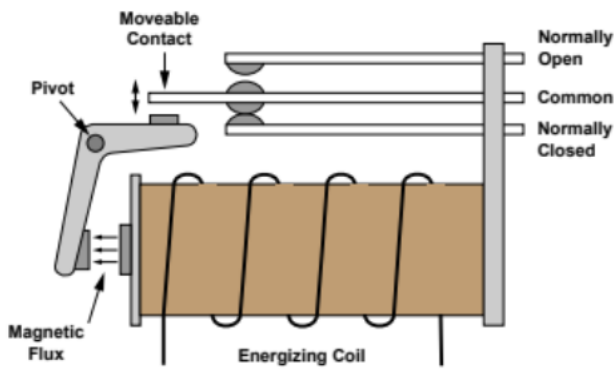

FIGURE IV. OFFICIAL DIAGRAM OF ELECTRICAL RELAYS [5]

Electrical relays come in two different types: a normally open relay or a normally closed relay. In the case of vehicles, they will usually open. Electromechanical relays allow current to pass from one side to the other by injecting a current through the energized coil, which creates a magnetic field with the pivot arm and moves it to meet the contact. Relays are inductive loads that add strain to the battery and are inductive parasitic. The drawback of a high load mainly comes from the energized coils. Calculating exactly how much each relay will draw is as simple as attaching a multimeter to both sides of the energized coil and measuring the resistance. From there, it is a simple Ohm's law equation:

The lower the resistance on an energized wire, the higher the load and vice versa. This does not mean that the solution would create higher resistance coils, as this would inhibit the magnetic flux needed to act. As mentioned, the best relays consume around 100 mA to 200 mA of power. Stacking this with the output requirements

$i=v/R$

MOSFETS

Comparing this with semiconductors, the component that would be selected is a transistor. Transistors, by principle, act as a switch, besides the rest of the capabilities they can provide. Before choosing the type of transistors, it is essential to understand what the goal of the semiconductor relay is supposed to do:

- Able to provide power without inefficiencies such as overheating or parasitic loads.
- Have low state load consumption anywhere below 20 mA – 50 mA load per relay.
- Fast switching times can provide power in less than a millisecond.

The team constructed a pros and cons table (TABLE VII) of different transistors:

TABLE X. TRANSISTOR TYPES

Type	Pros	Cons
BJT	• High gain • Good for analog applications • Strong linearity	• High power consumption • Slower switching speeds • Thermal runaway issues
MOFSET	• Very high input impedance • Fast switching • Lower power loss • Easily scalable	• More susceptible to static damage • Threshold voltage variation
JFET	• High input impedance • Low noise • Better thermal stability	• Normally-on device • Limited current handling capability
IGBT	• Combines high input impedance of MOFSET with low saturation voltage of BJT • High power handling • Suitable for switching high voltages	• Slower switching than MOFSET • More complex fabrication • Tail current during turn-off increases the loss

With this table, the team could gauge the type of MOFSETs ideal for acting as a relay. The team narrowed the selection between IGBTs and MOFSETs since these two have the best use cases.

Since the team doesn't plan to use voltages higher than 12 V, MOFSETs would be beneficial. MOFSETs are divided between depletion mode and enhancement mode, the first being a normally on device and the latter being a normally off device. The relays should usually be off at all times to ensure that no current can pass through.

With MOFSETs, it is essential to look at the key parameters that characterize the MOFSET for selection:

- Threshold Voltage – The minimum gate-to-source voltage needed to start turning the MOFSET on
- On-resistance – The resistance between drain and source when fully on.
- Maximum drain current – The maximum current it can safely conduct

- Drain-source voltage – maximum voltage the MOFSET can withstand, drain, and source
- Switching speed – the speed for DC-DC converters

These are critical for selection. Looking at the maximum drain current will help the team look at each power consumption and cross-reference it with power dissipation. Also, looking at the resistance will help with efficiency—a lower resistance will equal higher efficiency for switching speeds.

MOFSETs are being used as relays, meaning parasitic draws from switching will occur. The power distribution module will handle three types of loads: inductive, resistive, and capacitive. Inductive loads are hazardous to the longevity of the device. This is because the current still exists after the MOFSET is turned off. This will lead to voltage spike waves returning to the source, ultimately damaging the MOFSET.

A flyback diode can be used across the drain and source to avoid such damage. This will allow for no negative waveforms to travel back to the MOFSET. Inherently, most MOFSET devices already bring a flyback diode to avoid such issues, especially regarding power-specific applications.

FUSES

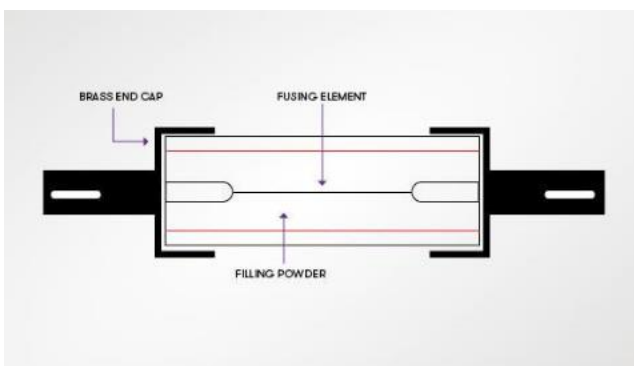

Figure V. Diagram Of Fuses [6]

Another crucial component in the traditional fuse box is fuses. Fuses are set right before the relays and act as a monitor. The fusing element is a film of metal that breaks under specific current specs, not allowing for the continuation of current flow. The monitor, of course, is static, meaning that it isn't a dynamic value that can be changed, since it is mechanical, and provides no feedback except when it blows. This hinders productive time and increases debugging time.

Fuses do have a pro, and it is that they are cost-effective. A fuse can cost anywhere from 50 cents to 1 dollar, but it comes with a few cons:

- No feedback – the feedback received is when it breaks
- Not dynamic – fuse values can only be changed by hand, by swapping the fuse
- Time constraints – when debugging a fuse box, a fuse can set back the engineers several minutes after the equipment is needed to be used.

A simple control system could be set in place to avoid these issues with a current monitor that will act as a fuse.

CURRENT MONITOR

Fundamentally, the current could be monitored as such:

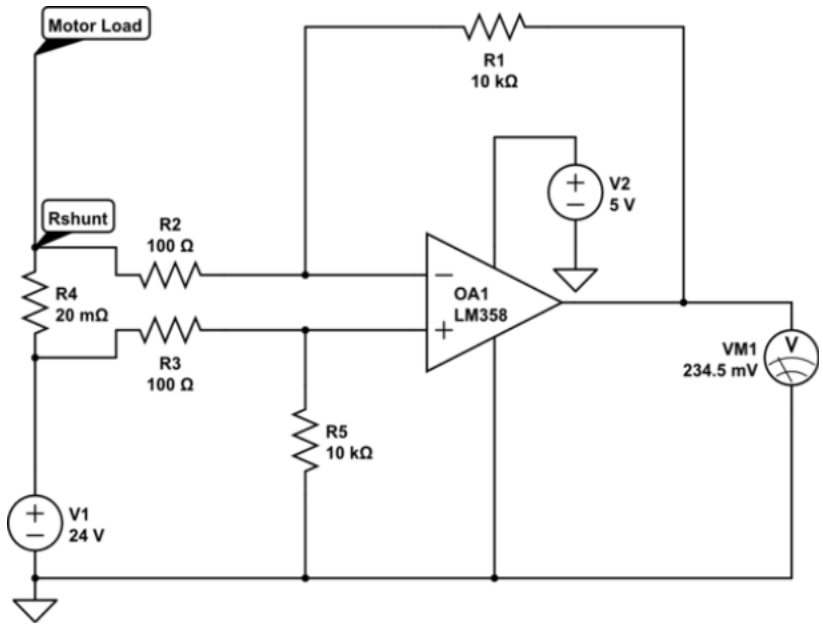

FIGURE VI. DIFFERENTIAL AMPLIFIER FOR CURRENT SENSING [7]

The following is a differential voltage amplifier using an LM358. With a differential amplifier, the following equation can be derived to find the voltage output of the operational amplifier:

$$V_{out}=I_{Load}R2R1 \cdot R3=(R1 \cdot R3)R2 \cdot I_{Load} \quad Vout=ILoadR2R1 \cdot R3=R1 \cdot R3R2 \cdot ILoad$$

Our voltage supplies for the op-amp depend on the logical supply source the team will use in the project. Ultimately, there shouldn't be negative voltages, as there shouldn't be any. The inputs into the op amp come from a shunt resistor; in essence, the op amp will be reading the voltage from both sides. Traditionally, that shunt resistor should be as low in resistance as possible while still withstanding wattage specifications, without wanting to burn the resistor.

The output is then sent to an analog-to-digital converter controller on the microcontroller. The microcontroller logic will compare the value with the set current threshold for a specific production. If it exceeds it, then it will shut off the relay.

CONTROLLER AREA NETWORK

Controller Area Network is an essential communication bus widely used in automotive applications. This is due to its ability to maintain signal integrity at a considerable distance. Communication with the rest of the electronic modules in the vehicle's CAN bus will be used.

CAN consists of two wires in a twisted pair, also known as a differential pair. The two wires are differentiated by high and low voltage. The high wires are active at the logical voltage value dictated by the microcontroller; the low wires are active at the logical low voltage value dictated by the microcontroller. In this communication bus, the logical bit 1 is communicated when CAN high is at the logical voltage threshold and CAN low is at the logical low voltage threshold. A transceiver will take the voltage difference and send the bit value to the microcontroller. This voltage difference plays a key role in the signal integrity of communication buses, as it will eliminate any voltage spikes in the CAN High and CAN Low, ensuring there are no missing bits. If both CAN high and CAN Low are at their logical idle voltage, it will be a logical bit 0.

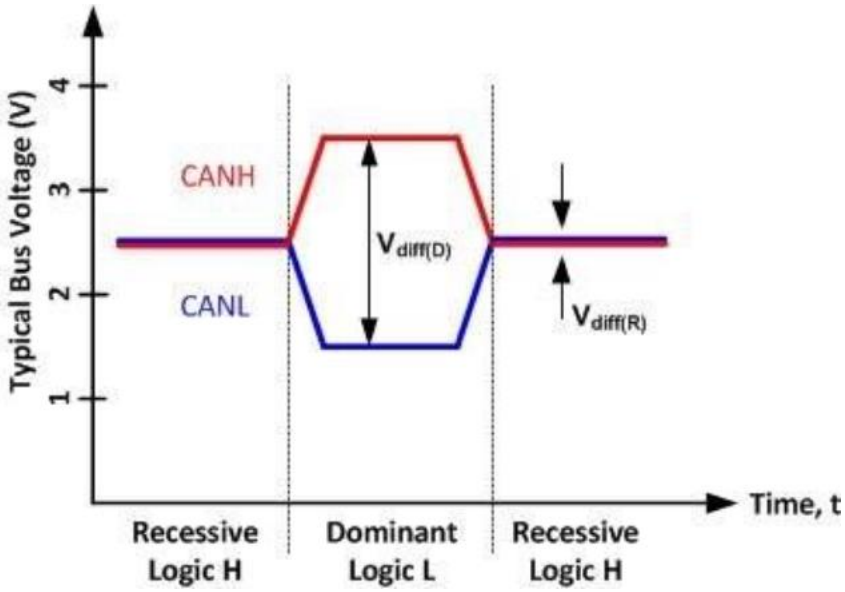

Figure VII. CAN Oscilloscope Waveform [8]

The picture above will demonstrate a mock oscilloscope graph of how the differential pairs work together.

An important characteristic found in CAN buses is the differential impedance. Impedance is generally taught as resistance. Another level of analytics goes into impedance when dealing with it in signal integrity. For a signal to travel smoothly, the line or wire it travels on should have the same impedance throughout—this is known as the characteristic impedance. If the wire changes its impedance, it will propagate a rogue wave back to the source, causing voltage spikes and, in turn, creating a dirty wave at the destination. This could be caused by going from a smaller gauge

to a bigger gauge wire or vice versa, electromagnetic interference, the physical board characteristics, or any other parasitic factors that can occur in electronics.

The differential impedance is the same principle, but the impedance is dictated by how close the wires are to each other as they create an inductive coupling that will affect the impedance. This is why wires in the CAN bus are twisted to ensure the distance between the cables is consistent throughout the system. To further help with signal integrity, there are parallel resistors at each termination specified to the differential impedance (in the case of CAN, it is 120 ohms) that will help avoid making rogue waves.

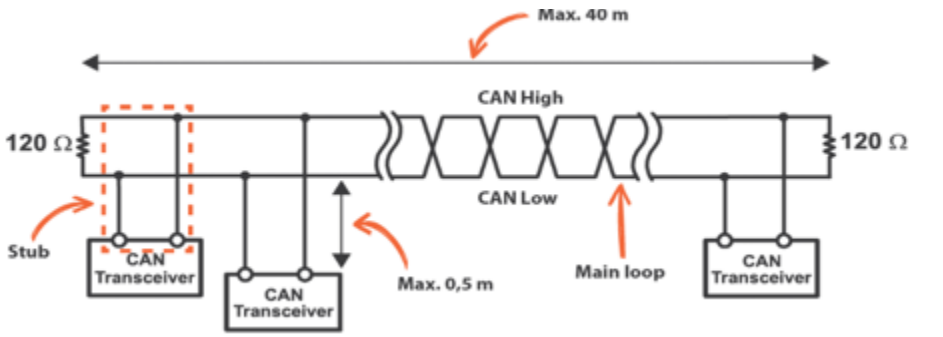

Figure VIII. CAN System Overview[9]

DIGITAL INTERFACES

As said multiple times, the traditional fuse box consists of mechanical components; there is no way to attain information for feedback, control, or configurations. The team will utilize four primary digital interfaces: ADC controller, I2C, CAN Bus, and GPIO.

The microcontroller that the team has been exploring for an ARM core is the microcontroller. ARM consists of a reduced instruction set that guarantees low power usage while maintaining a wide range of helpful instructions for embedded applications. STM32 microcontrollers are the most common in the automotive industry due to their ability to package multiple useful controllers for various applications.

Most importantly, the ADC controller is the most important. Digital processors cannot understand analog values. Instead, it has to be digitized into a binary stream for information to be captured. The following characteristics are essential for selecting a microcontroller with the proper ADC:

- Input channels – how many channels are available for collecting data
- Resolution – the resolution of the output that is being converted.
- Sampling Time – the frequency at which samples are taken
- Trigger sources – how and when will the software collect such data

Most importantly, the ADC controller is the most important. Digital processors cannot understand analog values. Instead, it has to be digitized into a binary stream for information to be captured. The following characteristics are essential for selecting a microcontroller with the proper ADC:

- Input channels – how many channels are available for collecting data

- Resolution – the resolution of the output that is being converted.
- Sampling Time – the frequency at which samples are taken
- Trigger sources – how and when will the software collect such data

Most importantly, keeping the goal in mind, the focus will be on having many input channels with a high resolution. Sampling time and trigger sources are lower priorities as these are mainly software-facing issues. To be as accurate as possible and eliminate deviations, the higher the resolution, the better. 10-bit resolution on the ADC will only achieve 1024 values. This means that in a logical voltage supply of 5 volts, when the ADC reads 5 volts, the microcontroller will read 1024, having only about a five mV standard deviation. The highest we could achieve is 12-bit resolution, which provides around four mV standard deviation, which will be enough for us.

For input channels, the more, the better. Though an analog multiplexer could be used to increase the size of our input channels, extra GPIO pins would only cost extra to be used as the selectors. In some microcontrollers, a direct memory access engine exists. This allows memory to be accessed without directly involving the controller processing unit. This means that accessing memory will not incur extra clock cycles and will not affect the speed of the programs. The ADC in the STM32 uses the DMA engine to store samples in memory, bypassing the CPU. This means that fewer clock cycles are used per written logical block. This will come in handy when sampling every second without interrupting the core instructions.

The next crucial digital interface that will be used is the GPIO pins. GPIOs are general-purpose input and output pins. In this project, it will be used to turn the MOSFET switches on or off. In the STM32, GPIO has a fabric nature, meaning that pins can be multipurpose. Two general-purpose input and output types are open-drain pins and push or pull. Open drain is simple; the GPIO voltage is always at the logical supply voltage, which is referenced as a logical bit 0. If the microcontroller wants to transmit a logical 1, it will drain the voltage, and the pin will read 0 V. This is commonly used in I2C buses where both clock and data pins are always high, and when transmitting data, their voltages are drained—hence open drain.

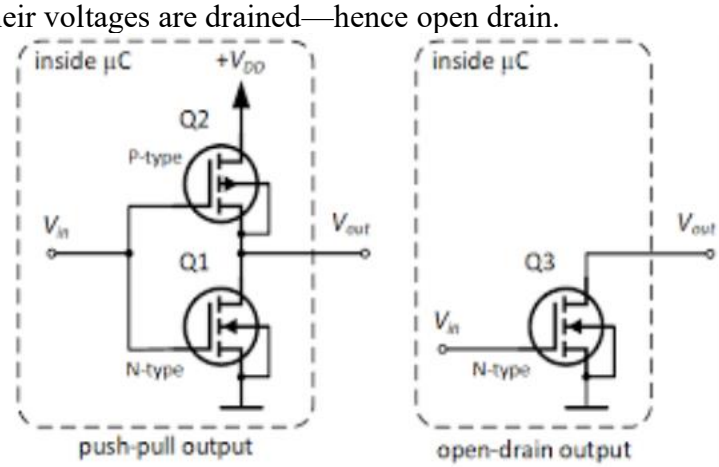

Figure IX. Different Driver Configuration [10]

The next crucial aspect is the CAN Bus controller. As explained earlier, the differential voltage between the wires has to be read and turned into digital form. For this, a physical transceiver will turn the signals into digital data and convert digital data into a signal. The main way to communicate with PHY is via a UART-style bus. The PHY will have a receive bus and transmit bus that will be used for communication.

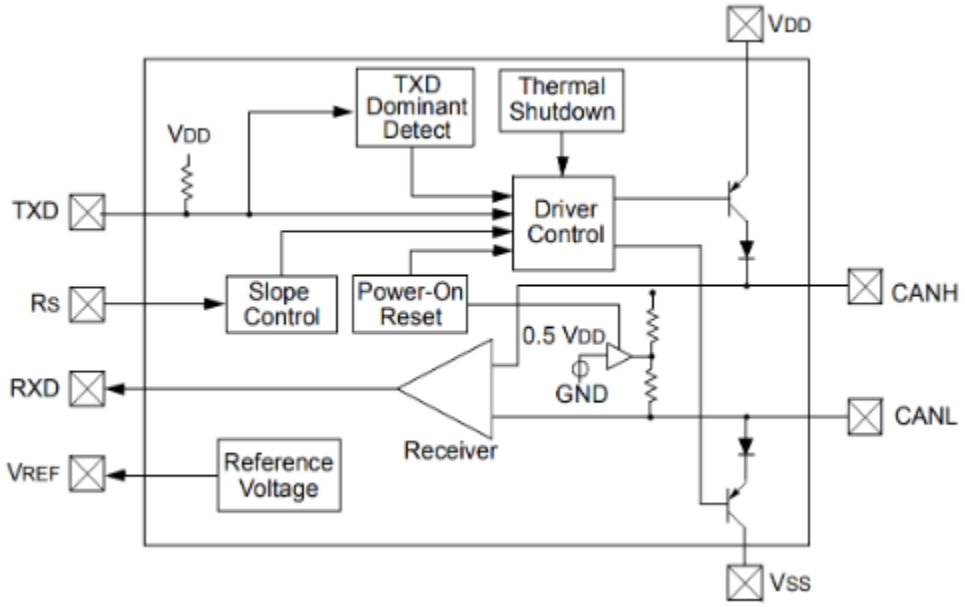

FIGURE X. THE BLOCK DIAGRAM [11]

In the CAN controller, the registers are set up as a mailbox system. When a message is received, the microcontroller will interrupt the program cycle to read the message. The CAN message is prepared in the registers, and the send status is enabled for sending to the PHY.

Another benefit of the CAN bus is the messaging structure. The messaging structure consists of an 8-bit ID with eight arrays of 8-bit data. Often containing multiple data points in one message. The ID could be extended to offer more data classifiers, which help with messaging structuring. DBC files are frequently used to decipher and construct these messages, though they are often used to mask reverse engineers from interpreting intellectual property.

IX. Intellectual Property

When designing and developing a Power Distribution Module (PDM) for a high-performance application such as Formula SAE, careful attention must be paid to the landscape of existing patents. Intellectual property law is fundamental in ensuring innovation while respecting the legal protections granted to previous inventors. This section investigates three verified and active patents related to power switching, enclosure design, and vehicle electrical management. We analyze each for relevance to our design and demonstrate non-infringement based on key distinctions in functionality and application.

Our PDM, intended for low-cost educational and motorsport use, features low-side MOSFET switching, analog current sensing, and real-time fault logging within a compact form factor. The following patents are most technically adjacent to our implementation:

1. Solid-State Relay Harvesting Power From Load By Measuring Zero Crossing—US 11689196 [12]

Filed by: Littelfuse, Inc.
Granted: June 27, 2023

a.) Summary

This patent describes a method for switching power loads using a solid-state relay incorporating zero-cross detection and control logic based on a chargeable capacitor. The system reduces stress on switching elements by synchronizing on/off transitions with zero crossings in AC waveforms.

b.) Claims Summary

Key claims include:

- Zero-cross detection of load voltage
- Use of capacitors to regulate switch timing
- Solid-state operation with intelligent switching and feedback

c.) Non-Infringement

Our PDM operates exclusively in the DC domain of a 12V race car electrical system and does not employ zero-cross detection or capacitor-regulated timing. It uses discrete low-side MOSFETs for on/off control, activated through microcontroller logic. As such, it avoids all claims related to AC zero-cross features and does not rely on energy harvesting or capacitor charging for its core functions.

2. Flexible Power Distribution Module Cover Assembly- US 9415730[13]

Filed by: Cooper Technologies Company
Granted: March 15, 2016

a.) Summary

This patent focuses on the physical structure of a power distribution module (PDM) enclosure. It features a grid of fuses, an insulating casing, a printed circuit board (PCB), and a threaded locking cover to provide durability and ease of service.

b.) Claims Summary

Core claims include:
Mechanical housing features such as screw-locked covers
Modular fuse grid design

- Organizational structure for traditional fuse-based electrical systems

c) Non-Infringement

Our design makes no use of threaded locking mechanisms or physical fuse grids. Instead, it replaces mechanical fuses with solid-state MOSFETs, housed in a custom 3D-printed or machined enclosure suitable for small race vehicles. These physical and architectural differences remove any overlap with the protected claims in this patent.

3. Solid-State Pre-Charge Module- US 8203810[14]

Filed by: Eaton Corporation
Granted: June 19, 2012

a) Summary

This patent describes a pre-charge control module for hybrid/electric vehicles, designed to manage capacitor inrush current using solid-state and electromechanical relays.

b) Claims Summary

Protected features include:

- MOSFET/relay hybrid pre-charge switching
- Voltage threshold-based logic to turn off pre-charge once capacitors reach near-supply voltage
- Use in high-voltage electric drivetrains

c) Non-Infringement

The FIU FSAE PDM does not involve pre-charging of any capacitive loads. Its function is limited to switching and monitoring 12V power outputs to various electrical subsystems such as pumps, fans, and sensors. Our implementation has no functionality for inrush control, no

integration of high-capacitance charge logic, and no electromechanical switching. Thus, the design does not infringe on any of these patent claims.

A. Patentability of Our Design

Our PDM features a combination of hardware and firmware approaches that are not commonly integrated into commercial offerings. Notable design characteristics that may be patent worthy include:

- Real-time reconfigurable low-side switching via mobile application interface
- Use of hybrid analog/digital current sensing using external op-amps and software-based thresholding
- A student-focused modular PCB architecture allowing for cost-effective component replacement and testing

While patent filing is not currently within the scope of this academic project, future iterations intended for broader distribution or commercial use may benefit from intellectual property protections.

B. Ethical Use Of Open-Source Resources

The team acknowledges and credits the open-source microcontroller libraries, schematics, and community tools (e.g., STM32CubeMX, KiCad, FreeRTOS) that helped support firmware and hardware design. All usage complies with applicable licenses (MIT, BSD, LGPL); no proprietary material was reverse-engineered.

Through analysis of three verified patents, it is clear that our PDM design does not infringe upon any existing intellectual property. The architectural, application, and implementation distinctions demonstrate originality and legal compliance. We remain committed to ethical engineering and intend to contribute to the academic and motorsport communities with a robust, safe, and innovative design.

X. GLOBALIZATION

Power distribution is something people use every day without even noticing. It plays a huge role in keeping things like vehicles, buildings, and technology running. In very high paced environments like motorsports, having a reliable PDM can be the deciding factor between a finished race or a dnf. As technology continues to grow and teams from different parts of the world compete on bigger stages, the demand for affordable, flexible, and smarter power solutions keeps getting stronger.

The Power Distribution Module (PDM) we are developing is designed to make advanced electrical management more accessible, not only to our Formula SAE team at Florida International University but also to student teams and research groups worldwide. Many student race teams face the same challenges: limited budgets, harsh environments, and a need for systems that can be easily integrated and programmable. Off the shelf PDMs exist, but their high cost and proprietary restrictions often prevent smaller or international teams from adopting them.

Our team has worked extensively to ensure that this PDM design can be accepted by engineers and builders across different regions and cultures. By emphasizing open standards such as CAN bus communication and by using components widely available from international suppliers, we have created a product that is not bound to a single market. A critical part of our design is making the PDM simple to adopt in different contexts without requiring specialized tools or expensive infrastructure. We want a team in Brazil, Germany, or India to be able to build, integrate, and benefit from our work without encountering technical or cultural barriers.

We also understand that international trade policies and groups like the World Trade Organization play a role in how products are shared across borders. Even though the WTO mainly works with governments, the rules it sets for trade, intellectual property, and environmental practices still affect how something like our PDM can be exported, imported, and adopted in different countries. By adhering to component sourcing guidelines and maintaining transparent documentation, we make it easier for teams around the world to import the parts or even the completed module without unnecessary barriers. The WTO's emphasis on fair trade and environmental consideration aligns with our goal of delivering a product that does not rely on restricted materials and minimizes waste through modular, repairable design.

Global acceptance also means understanding the needs of different groups. In speaking with peers from other universities and international Formula Student teams, we learned that many regions place high value on repairability and documentation in local languages. Our team plans to release user guides and design files that can be translated, making the PDM approachable to those whose first language is not English. This feedback loop, established through discussions with international students and mentors, helped shape our approach to openness and accessibility.

Globalization, for us, signifies cooperation. Communication with peers and mentors around the world is facilitated with platforms such as Teams, WhatsApp, and Microsoft OneDrive. These open lines of communication enable us to share schematics, receive constructive feedback on designs, and troubleshoot real-time problems irrespective of physical geography and time zones. This type of communication also reassures us that the engineering innovation is being generated without any domestic borders and that it thrives off an international collaboration of thoughts and ideas.

The Power Distribution Module (PDM) is a suitable global product candidate due to its size, customizability, and pricing. Building dependable, high-performance vehicles throughout the world with limited resources is a common interest of teams globally, and we hope to provide a product that supports engineers worldwide, and that recognizing globalization in the design process is essential. Globalization is the transfer of open communication, global components, trade compliance, and respecting culture. The PDM is a step forward in changing the game for a single team or competition, to provide not just a game changing innovation for engineers globally and elevate the boundaries on the global stage.

XI. STANDARDS CONSIDERATION

Many standards exist related to automotive electrical systems, established across various international organizations, to promote safety, interoperability, and reliability in situations that can lead to serious consequences of failure. The standards in motorsport and embedded automotive, underscore that when a part is compliant to standards, and it is designed alongside parts from others that meet the same requirements, we can trust that the designed part will not fail, we can maintain people and then integrate it within others parts designed by others.

For our power distribution system module (PDM), we have reviewed standards from: IEEE (Institute of Electrical and Electronics Engineers), ANSI (American National Standards Institute) allowing us to consider many standards related to product design, reliability, and environment. Part of the IEEE (Institute of Electrical and Electronics Engineers) standards included an overall framework like the IEEE Code of Ethics. More generally, we have considered and reviewed internationally accepted standards, established by: ISO (International Organization for Standardization), IEC (International Electrotechnical Commission), and a few others. Understanding that we do not just address standards, we address your acceptance to the point that we want to demonstrate to other teams, sponsors, and prospective teams, that our PDM is built to a standard of quality and safety.

In this section we will address a few standards to our PDM and describe how we are addressing them to ensure that our product achieves a high standard of acceptance on a global or competitive stage.

A. ISO 9001: Quality Management Systems

ISO 9001 establishes principles for quality management to help organizations consistently meet customer and regulatory requirements. Its focus is on continual improvement and customer satisfaction, encouraging teams to develop documented processes, testing procedures, and corrective action plans.

For our PDM, this standard shapes how we document our design process, track hardware revisions, and perform structured testing before integration into the vehicle. By following ISO 9001 principles, we ensure that our product maintains a clear development history, helping future teams reproduce or modify our work with confidence.

B. ISO 16750: Road Vehicles — Environmental Conditions and Testing for Electrical and Electronic Equipment

ISO 16750 provides guidelines for testing automotive electronics in conditions such as temperature extremes, vibration, humidity, and electrical transients. This is highly relevant to our PDM because it will operate in a racecar environment with constant vibration, rapid temperature changes, and exposure to transient voltages during engine start-up or sudden load changes. We applied these guidelines by designing our PCB for thermal management, selecting automotive-grade MOSFETs and connectors, and mounting the PDM with vibration-damping standoffs. Following ISO 16750 helps ensure our module remains reliable under real-world racing conditions.

C. IEC 60529: Degrees of Protection Provided by Enclosures (IP Code)

IEC 60529 defines the IP (Ingress Protection) rating system used to classify the protection of electrical enclosures against dust and water. While our PDM is not submerged like marine research equipment, it must still resist dust, metal shavings, and splashes of coolant or water that may occur during pit stops or testing.

Our goal is to achieve at least an IP54 rating:

- 5 for limited ingress protection against dust.
- 4 for protection against splashing water from any direction.

This level of protection ensures the PDM can survive the rugged environment of an FSAE competition without compromising internal electronics.

D. ISO 11898: Road Vehicles — Controller Area Network (CAN)

ISO 11898 defines the communication protocol for CAN, which is the backbone for most automotive control networks. Our PDM's real-time data logging and configuration capabilities depend on seamless communication with the car's ECU and telemetry systems.

We follow ISO 11898 by implementing differential pair routing with 120 Ω termination resistors and by using transceivers rated for high-speed CAN communication. Complying with this standard ensures our PDM can be integrated with other automotive subsystems without signal integrity issues.

E. Summary of Standards Implemented

By making our design consistent with their requirements we know the design will be more reliable, and more widely accepted around the world. The standards we are hoping to comply with in our project are:

ISO 9001: Quality Management Systems

ISO 16750: Environmental Testing for Road Vehicles

IEC 60529: Degrees of Protection Provided by Enclosures (IP Code)

ISO 11898: Road vehicles - Controller Area Network (CAN) Communication

Standards are important in engineering; they inspire confidence because they ensure that products meet expectations for safety, quality, and compatibility across international borders. Following these internationally recognized standards demonstrate and a meaningful investment into developing a device with equivalents from worldwide automotive manufacturers is that our PDM design has technical merit, as well as a meaningful investment into developing a device with equivalents from automotive manufacturers worldwide.

XII. HEALTH AND SAFETY

The design and construction of the Power Distribution Module (PDM) will prioritize the safety of the end-users, the Formula SAE Team that will accept the responsibility of driving and maintaining the race car, as well as the safety of the design team will designing and testing the power distribution module. The effort design will recognize any electrical, thermal, and operational hazards while ensuring the observation of established safety procedures in automotive electrical circuits.

A. User Safety Considerations

1. Electrical Protection:

The PDM is designed to offer electrical protection against hazards, and each power channel to the circuits of the PDM is programmed to offer overcurrent protection. Upon a short circuit or overload condition that would cause excessive current flow, the protection circuit is programmed to disconnect the offending circuit and eliminate the risk potential for fire or ignition of the wiring and components connected to the circuit.

2. Thermal Management:

High-side MOSFET switches and traced which conduct power will be thermally managed based on PCB layout design, heat dissipation layers, and proper component selection based on high tolerance against heat exposure. Compared to our PDM enclosure design, many electronic components can fail hazards and present fire risks at unexpected ambient temperatures beyond operational conditions.

3. Physical Safety of Users:

The PDM enclosure will be built from non-conductive, durable, and flame-retardant material protecting users from accidental electric shock, burns or other conditions of non-conductance which may occur during installation, inspection, or emergencies.

4. Fault Diagnostics and Alerts:

Immediate fault reporting through CAN bus provides operators with real-time notifications of unsafe power conditions. This reduces response time to hazards and allows for safe vehicle shutdown procedures.

B. Designer and Development Team Protection

1. Testing procedures:

All prototype testing will be done using current-limited bench power supplies, proper grounding, personal protective equipment (PPE), including insulated gloves and safety goggles reduced exposure to electrical hazards.

2. Workplace practices:

The development phase follows Standard ESD (Electrostatic Discharge) practices to reduce unintentional damage to sensitive components, eliminating a risk of something going wrong or unsafe behavior in later stages.

3. Foreseeability of hazards:

Failure modes were considered during the design phase. High current draw, reverse polarity connections, and water exposure in wet racing conditions. Protective measures in place include a reverse polarity protective circuit, IP rated enclosures, and moisture resistant coatings, mitigating foreseeable hazards.

C. Liability and compliance

The design of the PDM takes into account well-known safety practices following standards for automotive electronics (for example, ISO 26262 functional safety in road vehicles) with the intention of reducing liability risks to the team and maintaining compliance with the Formula SAE electrical safety policies. Ware protecting from foreseeable hazards and taking precautions to protect the user is expected to improve safety for both vehicle and driver during racing operations.

XIII. ENVIRONMENTAL CONSIDERATIONS

The design and advancement of the Power Distribution Module (PDM) includes environmental considerations for the production processes, as well as use in the long term in the Formula SAE vehicle. Our group has made concerted efforts to ensure that the PDM design will utilize components that meet environmental guidelines and standards and utilize sustainable engineering practices to attempt to reduce its ecological footprint over its duration of use.

1. Use of RoHS Compliant Components

To minimize the risks of hazardous materials, every electrical component selected for the PDM is RoHS (Restriction of Hazardous Substances) compliant whenever possible. RoHS compliance ensures that hazardous materials, such as lead, mercury, and similar materials are minimized, thereby making the product safer to handle and to dispose of, since these materials will not be released into the environment.

2. Design for Easy Disassembly

The modularity of each of the sub-assemblies used in the design of the PDM are designed to be easy to disassemble at the end of the life of the PDM. This modularity not only allows for ease of maintenance and replacement of parts, but can also allow for recycling of individual components - such as the printed circuit board assemblies, connectors, and the plastic housing materials.

3. Component Selection on LCIA (Life Cycle Impact Assessment)

In selecting the materials and components, environmental concerns were considered beyond just looking at the performance and cost of the components. The components were selected based more on their longevity, and less on the environmental requirements of their production, to help reduce waste and consumption of natural resources over time.

4. Following the Hannover Principles

The design principles for the project varied in accordance with some key Hannover principles, specifically:

- Responsibility for the consequences of design: Taking precautions to ensure design decisions do not negatively affect the environment.
- Respect for the interdependence between people and nature: Limiting and controlling harmful emissions and managing the use and treatment of hazardous material during assembly and use.
- Elimination of waste: Using more compact and efficient designs for circuits with smaller values in components means using less material and power.

5. Low Energy Consumption in Operation

The PDM was designed with an operational approach to minimize power lost in the electrical system of the vehicle distribution of power has less energy waste involvement to improve vehicle efficiency and decrease the environment caused by competing and in operation.

The PDM project embraces modern environmental engineering methods to ensure that the final product is safe, sustainable, and environmentally friendly, all without sacrificing high-performance aspects as it races in the Formula SAE event.

XIV. SUSTAINABILITY CONSIDERATIONS

Sustainability is crucial when creating a product that doesn't harm the environment and is long-lasting, considering both environmental and societal concerns to achieve optimal results. As the automotive industry advances towards eco-friendly and efficient designs, our team recognizes the responsibility to develop a product that not only performs at a high level but also minimizes environmental impact throughout its lifecycle. Achieving sustainability in this project involves thoughtful material selection, energy-efficient operation, modularity for future upgrades, and robust software practices that extend the product's usability while reducing waste. Using eco-friendly materials is a step in the right direction, but not enough. Lastly, we ensure that our manufacturing processes are as close to net zero as possible for long-lasting use.

A. Hardware Sustainability Considerations

The Power Distribution Module (PDM) has many electronic components and structural materials, each of which was carefully selected to ensure we are practicing sustainability. As discussed in the Environmental Considerations section, all components within the PDM will follow RoHS compliance, ensuring the elimination of hazardous substances like lead, mercury, and cadmium, which are harmful to both users and the environment. The PDM enclosure will be manufactured using recyclable thermoplastics. High-impact ABS or flame-retardant polycarbonates will be chosen due to their durability and recyclability. These materials help the PDM withstand the heat and mechanical stress of racing conditions while providing the opportunity for responsible disposal or repurposing at the end of the PDM's lifespan.

One of the most essential parts of our hardware sustainability efforts is modularity. The PDM has been engineered such that serviceable sub-assemblies (power switching board, control board, connectors, etc.) may be separately maintained or replaced with other sub-assemblies, without disposal of the entire unit. Not only will this extend the product's life, but it will also significantly reduce electronic waste by enabling component reuse. With consideration of the Hannover Principles, our team has acted to make sure that design choices support the interdependence of people and nature, and advance a product lifecycle based on repairability, recyclability, and minimizing environmental impact.

In terms of battery storage and management, the PDM does not have its battery, but it will interact with the energy storage system for the vehicle. Therefore, we must reduce power consumption. The PDM has made use of efficient MOSFETs with low on-resistance, and careful PCB layout will ensure we minimize power loss. Ultimately, the PDM should contribute to reducing overall energy consumption of the vehicle, a key aspect of sustainability in EVs. The PDM is required to survive a high-stress racing environment; however, this means, like all electronic devices, the PDM has an operational life. With this in mind, the team has selected materials and design patterns that will make recycling or safe disposal easier once the PDM reaches end-of-life. The sustainable approach allows for the reuse of valuable materials and less waste, thus offering a circular lifecycle for the physical components of the PDM.

B. Software Sustainability Considerations

The design of the PDM gives significant attention to software sustainability because its functionality relies on its firmware. For the PDM to truly be maintained and upgraded without any physical changes, the ability to download updates to the PDM firmware through CAN bus communications reduces waste and gives products a longer lifespan. The code is written clearly and with modular thinking to allow future team members to update easily, or to expand features if required. This process also enables the PDM to adapt to improving vehicle systems, while allowing the product to avoid obsolescence with movements specifically toward software and improvement-based activities, which drive an evolving sustainable product lifecycle.

XV. MANUFACTURABILITY CONSIDERATIONS

Design for Manufacturing (DFM) is deeply embedded in the Power Distribution Module (PDM) process. DFM means we can provide carefully designed products that can be manufactured effectively, efficiently, consistently, and affordably. We want to give a design that meets its technical requirements, but at the same time is practical to manufacture in volume. Complex designs can increase product costs, assembly time, and failure rates. Our focus has been to create a product that performs well but is also simple, with manufacturability in mind as we design and develop the product.

A. Simplified Design

With considerable thought that went into minimizing the architecture of the PDM to use only required functionalities concerning power distribution, fault protection, and communication, the overall part count was minimized by consolidating features using multifunctional components such as microcontrollers with built-in CAN communication and smart MOSFET switches with built-in diagnostics. Consequently, not only did we reduce the overall number of assemblies to a minimum, but we have also reduced the complexity of production, which will thus enhance assembly reliability and mitigate potential failure modes, thereby improving the manufacturability and robustness of the PDM.

B. Standard Components and Sourcing Strategy

The PDM incorporates standard, readily obtainable components from multiple supply sources in an industry-standard fashion for accessibility and lead time reduction. By choosing readily available parts such as passive components, automotive connectors, and standard MOSFETs, the purchasing and stocking process is simplified. This way, the manufacturing process can either use current production inventory or have a continuous production flow without dependence on custom or specialty components. Keeping parts common not only allows for greater options in purchasing but also allows for a lower footprint and greater flexibility in production costs.

C. Efficient Assembly Process

Ease of assembly has been a primary concern in the PDM design throughout. The PCB layout was designed to maximize the benefits of automated assembly procedures. The PCB only contains surface-mount technology (SMT) components to allow for faster, more accurate placement. Through-hole components were minimized to ease production operational costs. The enclosure will be easy to assemble. Manually placing standard fasteners or connectors can be done quickly and securely to ensure the correct integration of the PCB and connectors. This design approach allows scalability for simple product prototypes, but can also be produced again at a larger scale.

XVII. Concept and Development

Deriving the initial concept development presents complex tasks, as there are two main pipelines the team can take to accomplish the team's goals. One avenue the team could take is going through a low-level design, designing the circuitry needed from fundamental blocks and components. This has advantages of its own when it comes to more control of the project and the feedback the team wants to receive from the power system. The second approach uses integrated circuits to accomplish the job in one block. This means the team will rely heavily on manufacturing chips, reducing complexity and achieving accurate results. Below is TABLE I.

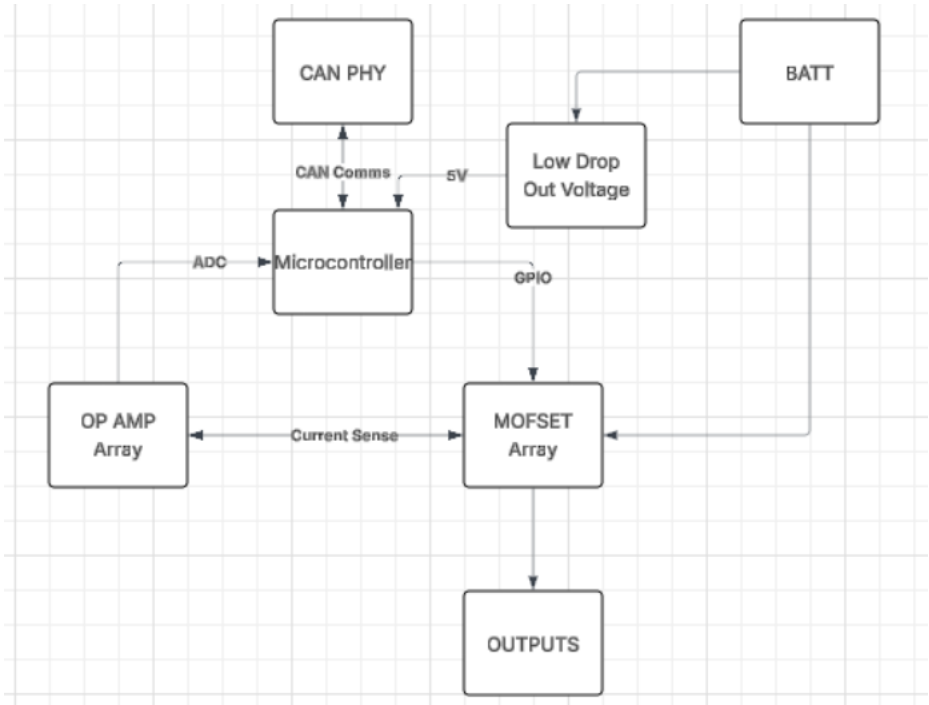

Figure XI. Low Level Design Diagram

Option 1: Low-Level Design

The first alternative for developing the power distribution module is developing low-level circuitry. Minimizing dependencies on internal circuitry devices and going through the basics of development. This provides overall control of the circuitry and will reduce the dependency on manufacturers for files, simulation tools, and component libraries.
With the advantages being:

- Have more control over the design and be able to fine-tune.
- Components can be interchanged and are easily accessible
- No worries of infringing on intellectual property or misuse of vendor components.
- Cheaper in volume quantity.
- Easier to prototype boards

And the disadvantages it may provide while developing:

- More room for error with total control

- Lack of testing, as the project timeline is short compared to components made for automotive, meaning reliability could be low.
- Less accurate results can occur due to the components not being perfectly designed to specifications

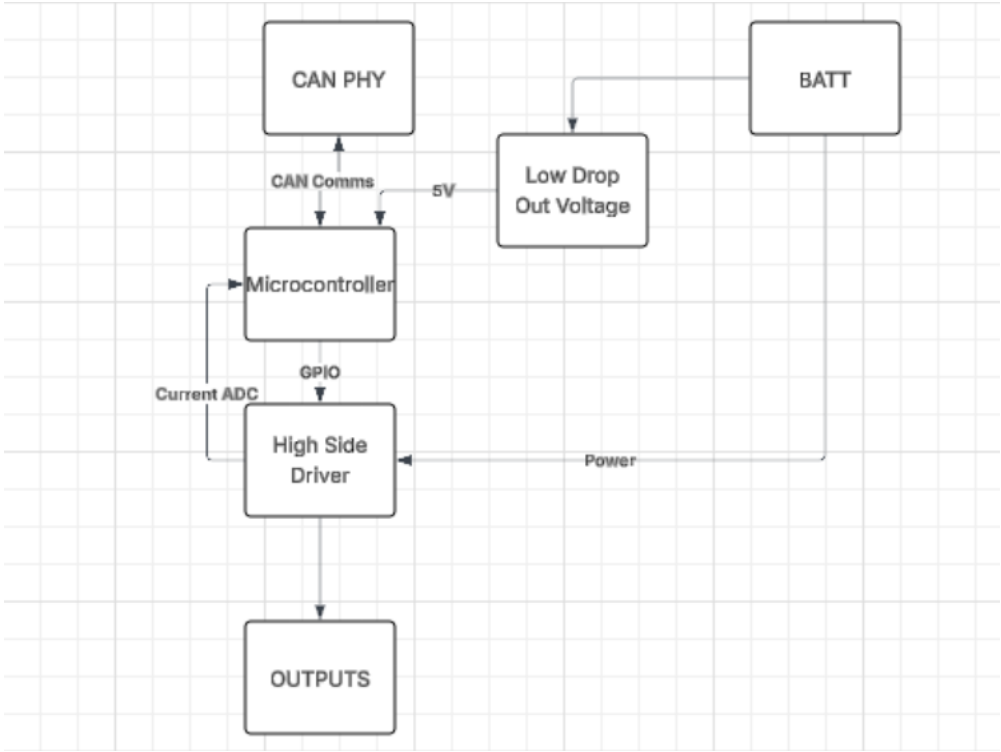

FIGURE XII. HIGH-LEVEL DESIGN DIAGRAM

OPTION 2: HIGH-LEVEL DESIGN

The high-level design incorporates the OP AMP and MOFSET array into one block that can be handled by integrated circuitry such as a high-level driver. The high-side driver will contain most of the circuitry blocks needed to accomplish this project's design. With the advantage being:

- Tested components that are made by manufacturers that specialize in automotive applications
- Less design work and more focus on the development of the system as a whole
- Reliable parts with comprehensive data sheets that will be useful for development.

The disadvantages are:

- Less control over the actual design and specifications of the low-level circuitry
- Components can cost more since they are specialized.
- Less customizable for specifications

That said, looking at what goes into the concept design and what the team values when picking the options is essential.

	Performance	Customizability	Configurable	Cost
Performance	1	3	5	9
Customizability	5	1	3	5
Configurable	7	3	1	5
Cost	9	1	5	1

	G means.	Weights				
Performance	18	4.5				
Customizability	14	3.5				
Configurable	16	4				
Cost	16	4				
	Option 1			Option 2		
Under $200	Yes			Yes		
Feedback requirements	Yes					
Performance	4.5	5	22.5	4.5	9	40.5
Customizability	3.5	9	31.5	3.5	3	10.5
Configurable	4	7	28	4	3	12
Cost	4	7	28	4	5	20

Total			110			83

Based on the analysis, Option 1 is the best concept design for the project. It will allow us to have a customizable system, swap different circuitry for testing, reduce cost, and allow for more configurations on the board itself. Option 1 gives us a total score of 110 points, which is the concept design the team will choose.

XVIII. END PRODUCT DESCRIPTION AND OTHER DELIVERABLES

A. End Product Description

The end product deliverable is a wholistic package consisting of hardware, high-level software and firmware integration. Each of them provides simplistic configurations and plug-and-play features, this will be delivered to a team predominately made up of mechanical engineers with little-to-no experience with these.

On the hardware side, deliver a Power distribution module on the PCB. This has the major blocks that the team will be looking for consisting of voltage sensing, current sensing, CAN controller integration, and power output control. On the high-level software side, the goal is to develop a simple desktop UI application where the power distribution module configurations can be configured and at the same time download data files relating to the electrical system. The application will be cross-platform, not limiting the end-user on what operating system they choose to use. The ideal stretch goal is to provide an external database for data uploads and storage. For firmware—a bit more complicated than the reset—will have a configurable build package where different configs for the hardware system can be selected via KConfigs or any other build system that is intuitive. This will minimize the end-user from touching the rest of the firmware and providing ease of setting up. With all these features, the power distribution module will be a semi-conductor relay and fuse system with voltage and current monitoring capability, allowing the team to collect, configure, and monitor with ease.

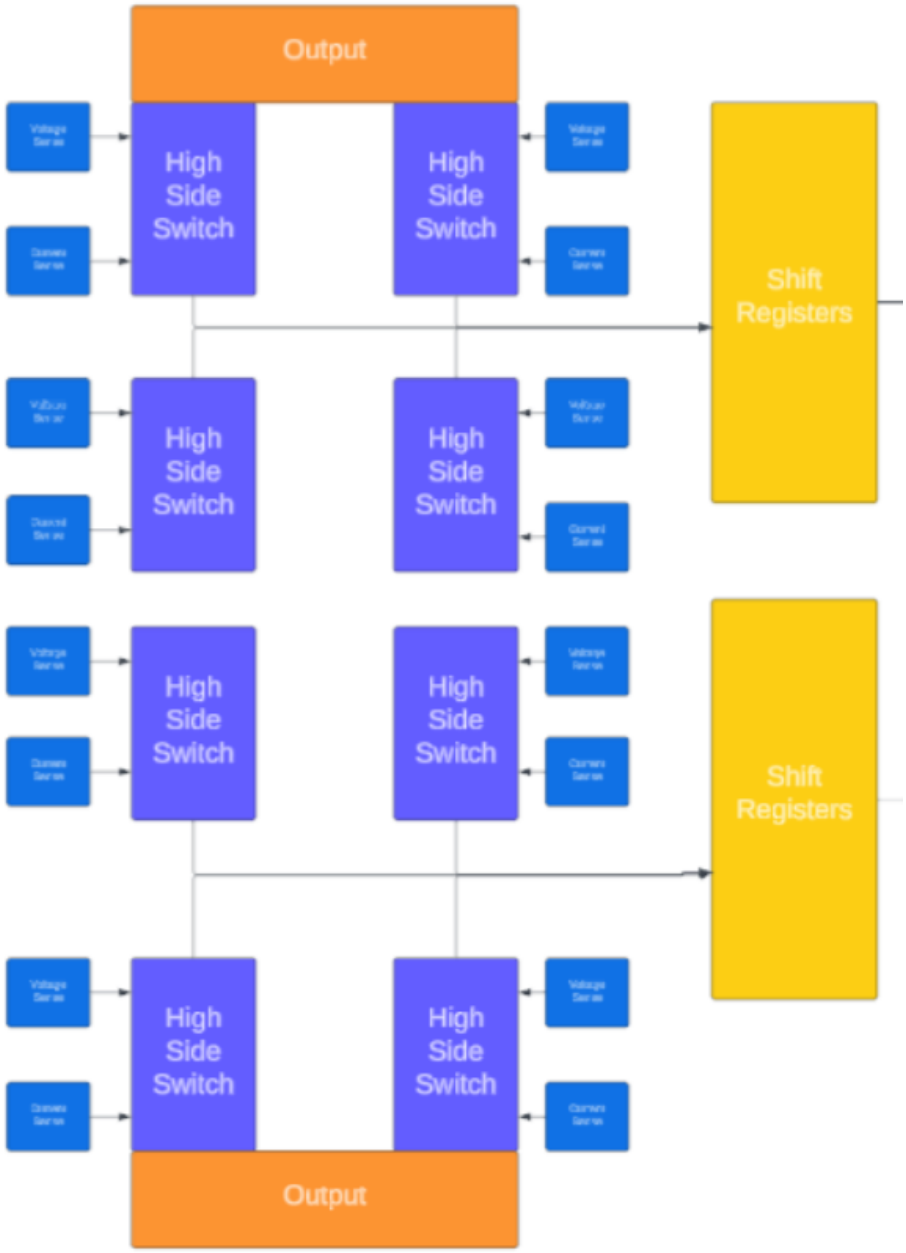

Figure XIII. PCB Block Diagram

B. Functions

Hardware functions at a high level will be divided into two segments:

- Power Output Circuitry
- Microcontroller and Digital Circuitry

Figure 1a. Power Output Circuitry High-Level Diagram

There 5 blocks that hold important functionalities in the power output circuitry, this involves:

- Voltage sensing
- Current sensing
- High Side Switch
- Output
- Shift registers

Each one of the functional blocks holds multiple critical functions that work together to provide the end-user with a great product. Voltage and current sensing are simple circuits that help with monitoring the power output. This will be routed to the ADC channels in the microcontrollers for two main reasons: feedback and monitoring. That feedback is used to close the output due to overvoltage, undervoltage, overcurrent, or undercurrent. Monitoring s logged on flash memory and distributed through CAN. The high side switch is essentially an integrated circuit that consist of Mofsets with protection circuitry built in and in most cases current sensing capabilities. Shift registers are also essential in this as they help minimize the number of pins used for GPIO, meaning more IO capabilities on the microcontroller and while having more power output circuitry.

TABLE XIII. SOLUTIONS TO MINIMIZE RISKS

Functional Block	**Function**	**Function Description**
Current Sensing	Current Measurement	Measures the current consumption per output.
Voltage Sensing	Voltage Measurement	Measures the voltage per output.
High Side Switch	MOFSET	Power MOFSET that acts as a switch. This is the replacement of the relay.
High Side Switch	Flyback protection circuitry	Protects the MOFSET from spikes in voltage or current especially during inductive loads
Shift Registers	GPIO expansion	Due to the microcontroller GPIO limitation. The shift registers allow us to use less GPIO while having more power outputs. This is accomplished by writing to shift register serially while it acts as mux enabling the selected outputs.

Output	Automotive connectors	Specialized connectors specified for automotive use cases are usually Deutsh or amp connections.

The next high-level segment consists of the microcontroller unit:

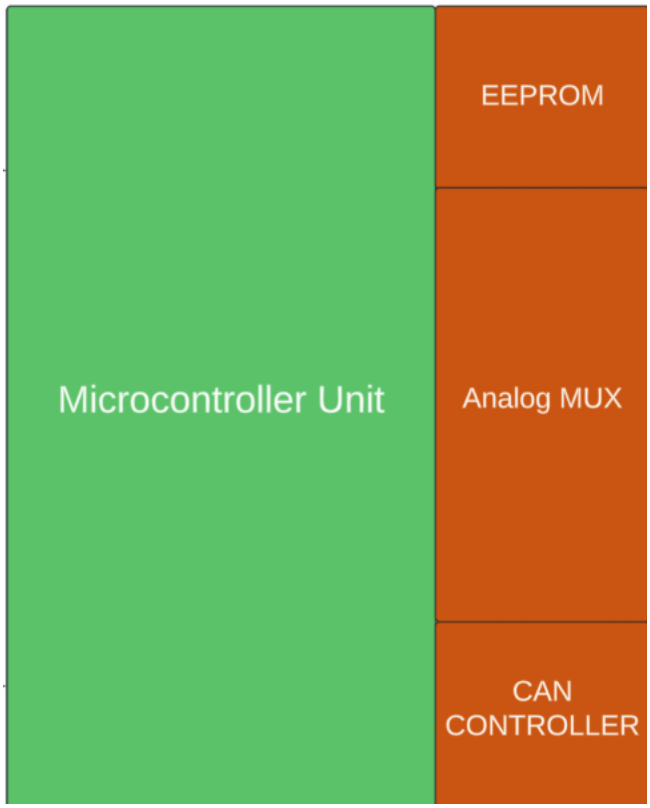

FIGURE XIV. FUNCTIONAL BLOCKS

The microcontroller segment consists of mainly digital and analog functional blocks that help exhibit the functionality of the power output circuitry. There are four main functional blocks that will be used and designed:

- Microcontroller unit
- EEPROM
- Analog MUX
- CAN Controller

The microcontroller unit consists of a core processor that handles logical sequences of instructions. In the automotive industry, the most common embedded system processor to use is the STM32. Though each microcontroller has dedicated flash, it is ideal to have a redundant storage place such as the EEPROM where data can persist and be pulled at all times. It would be ideal in the future for firmware upgrades as well. The analog mux has the same concept as the shift

register, and it is a multiplexer that shifts through the different voltage and current sensing circuitry to gather data. This is predominately due to the limitation on GPIO. If we decided to integrate more power outputs, the more limited the team would be due to GPIO restrictions. The shift registers and analog MUX help solve this issue. Finally, the CAN Controller helps translate data gathered or information being injected to CAN signals to be propagated through the vehicle.

TABLE XIV. FUNCTION TABLE

Functional Block	Function	Function Description
Microcontroller unit	Analog to digital conversion	To gather current and voltage measurements, the analog signal must be translated to digital. The microcontroller has built an ADC controller to accomplish this.
Microcontroller unit	ALU and Instruction Execution	Controls the flow of the program and dictates the behavior of the power distribution module
EEPROM	Data Storage	Stores data periodically that is being collected by the microcontroller and can acts an overflow remedy if the onboard flash memory from the microcontroller is full.
EEPROM	Configuration storage	Configurations for the fusing current—detecting when to close the MOFSET based on current—and any other configurations for the PDM itself can be stored here.
CAN Controller	Vehicle Information Distribution	Distributed structured messages through a twisted pair through the vehicle. Ideal for structured sending and receiving and long-distance message communication by wire.

C. Specifications

Each functional block that was discussed has specifications tied to them. There are certain parameters that need to be met to be successful in the project. This project involves a ton of measurements and careful control logic to make sure that the power integrity in the car is at an all-time high. Here is a list of specifications for the functional blocks:

TABLE XV. FUNCTIONAL TABLE CONTRIBUTION

Functional Block	Specification	Description
Current Sensing	Current measure deviation has a plus or minus 5% error.	Current measurements need to be precise since this drives the fusing logic—which turns on or off the power having 0.05 A error will be ideal to have accurate data for controlling power. Usually, the current output fusing will be set to 5 A or higher meaning there is a lot of room with a 5% deviation from a perfect measurement.
Voltage Sensing	Voltage measure deviation has a plus or minus 10% error.	Voltage measurements could be less precise as the main issue would be from undervoltage as this could seriously damage the battery or sensitive components. In automotive, going below the 20% SOC mark could be irreversible damage, especially if the system is powered by a lithium battery.
High Side Switch	High Side Switch can turn on a power output in less than 1 ms	This is mainly looking at the time when there is an overcurrent scenario for an extended amount of time. Having overcurrent shots could damage equipment severely. Meaning turning of the output causes him to be quick. This specification is based on the amount of time a fuse takes. This is more than capable of a bandwidth system such as an STM32.
Shift Registers	Capable of controlling up to 8 power outputs per GPIO	Using a shift register allows us to use a GPIO to transfer information serially from the microcontroller to the shift

		register. The shift register will output based on the sequence. This allows us to expand the power circuitry array extensively without worrying about microcontroller constraints.
All Functional Blocks	Withstands 150 Celsius temperatures	This is the standard for most automotive applications.
All Functional Blocks	EMI compliant	EMI interference is minimal, and signals from the board or electromagnetic waves don't dictate functionality.
All Functional Blocks	ESD protected	Working with high current applications poses ESD risks. Making sure the circuitry is ESD protected ensured longevity of the circuitry.
CAN Controller	Can run at 1 MHz Bandwidth	Most automotive applications CAN run at 1 MHz, and the ECU used in the vehicle currently runs at this bandwidth.
EEPROM	128 Mb storage capability	This allows for 20 minutes of data logging and configuration storage.
Microcontroller	> 50 MHz internal clock	This allows for a high-speed application for faster instruction throughput.
Analog MUX	4 analog inputs per two GPIO	This means that we would only need 2 GPIO to spare to the mux to get 4 analog inputs from the mux. This increases our analog input capabilities by 4 times. With the shift register allowing us to have more available GPIOs, this is a tradeoff that can be taken.

D. Other Deliverables

The scope of the project could be dragged on since there are a multitude of technologies that could be integrated into the project. The deliverables are simple for a version of one of the power distribution modules. The goal is to provide a fully functional suite of hardware, firmware and

software to the FSAE team capable of maintaining their power integrity and control in the vehicle while providing data for engineering designs. Here is a specific list of deliverables:

- Firmware integration via source control with documentation of how to boot the board with the latest software installation and instructions on firmware configuration channels
- Software for controlling high-level configurations such as power output selections and current fusing.
- Printed circuit board with all the high-level segments presented that are tested, simulated, and verified by the senior team.
- Proper documentation on design, construction and software that was developed to hand off project to the FSAE team.
- Bill of materials of all the parts for replication to have redundant systems at hand.

With these deliverables, the senior team is confident that it can be delivered by the end of this year.

XIX. Plan of Action

A. Statement of Work

1) Scope

The design team will develop the PCBA, firmware, and software for the power distribution module. It will allow the FSAE team to control power distribution electronically and eliminate electromechanical components. They will also be able to collect power data such as voltage and current per output.

2) Location

The preliminary design stage will be done remotely once the first prototype is designed. It will be tested at Florida International University Engineering Center at the machine shop where the FSAE team resides. Testing for the board will be conducted with lab equipment to make sure the board meets specifications.

3) Period

The start period of the design stage will be in August when the team will start designing the PCBA, firmware, and hardware. The project will be finalized by mid-November to present at the senior showcase.

4) Responsibilities

- Carlos Almagro*:* Firmware Designer – develops the low-level software needed to ensure the power distribution of high–level logic design is propagated in the circuitry. Will be working with all teammates as their projects overlap.

- Daniel Picado: Hardware Designer – will develop the PCBA and schematic needed for the power distribution module

- Jose Correa: Software Designer- will develop high-level software to interact with the board via a desktop application.

B. Work Breakdown Structure

Here the team will breakdown the work structure and what phases the project will go through. Many of these stages could be worked in parallel to accelerate the design process and enter the testing stage earlier. Each one was taken into consideration based on the feedback from team members.

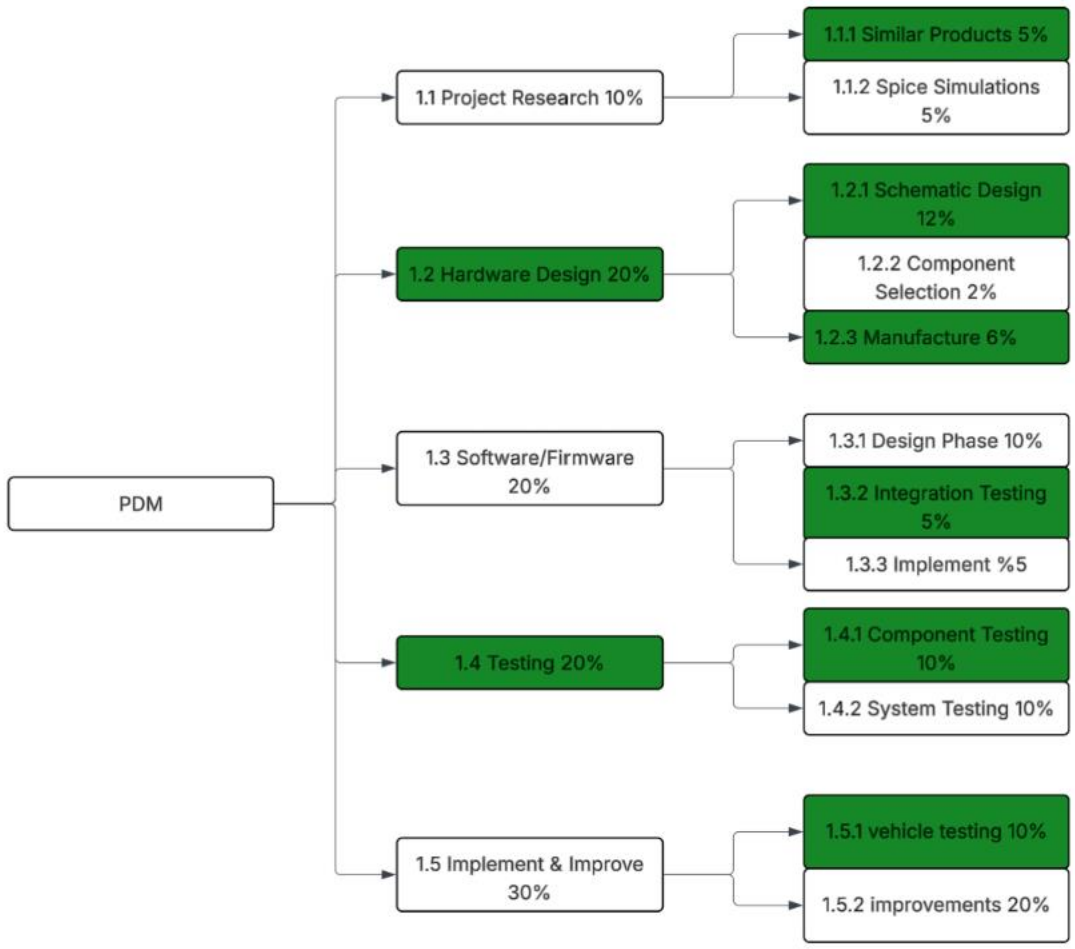

FIGURE XV. BREAKDOWN STRUCTURES

Phase 1: Project Research

- Objective: Explore the market for similar products and see the advantages of these projects and take inspiration.
- Approach: Review the functions and specifications, gather feedback from the FSAE team for what they are looking into the product. There are open-source solutions that have free licenses for use without intellectual property issues. Gather these inputs and see the feasibility of development.
- Expected results: From this approach, the team will have the information needed for hardware/software design.

Phase 2: Hardware Design

- Objective: Start development of the hardware with the project research completed some spice simulations should have been completed to start making schematic designs and implementing into PCBA design software. With this it can be ordered by a PCB manufacturer.
- Approach: The team will use Altium designer to implement schematics and PCBA. There will be power integrity and signal integrity simulations via Ansys SIWave to guide the design process. After completion it will be possible to send designs to companies such as JLCPCB.
- Expected results: The team hopes to see five PCBS fully assembled in-house via soldering, which will help test the firmware.

Phase 3: Software/Firmware Design

- Objective: Design software stack for a high-level solution of configuring the PDM via a desktop environment. Firmware development will allow the enablement of the PCBA for testing.
- Approach: In the meantime, software can be developed in conjunction with Phase 2. This is done via emulation QEMU and the high-level can interact with QEMU.
- Expected results: The firmware and software to be integrated tested before deployment and end-to-end testing with the hardware.

Phase 4: Testing

- Objective: From the simulations, the aim is to test at a component level meaning the specifications for each of the functional blocks. This involves lab testing and software testing. From there start testing with a power supply the power distribution via the board.
- Approach: Get a hold of lab equipment such as oscilloscopes, power supply and if possible, for signal integrity verification of a VNA or TDR. From here, this data will be collected for improvements if they don't meet specifications. From there simulated testing of the system could be done to see the power outputs and how they perform.
- Expected Results: Gather data to see if specifications were met. If met, then the system can enter the implementation stage in the actual vehicle

Phase 6: Implementation

- Objective: To test the PDM inside the vehicle and different configurations of the PDM components. From here gather data and inputs from the FSAE team to improve the product.
- Approach: The team will be on-site at Florida International University machine shop to test the product with the actual vehicle. From here, the team will gather data metrics and see how the system performs while the car is driving and standalone.
- Expected results: To see a better improvement from the electromechanical counterpart and see the data the team could gather from the outputs. From their work on version 2.

C. Gantt Chart

To track the progress of the project, the team has defaulted to using a Gantt chart to gather deadlines for certain phases of the project. The Gant chart will layout the project workflow through the design phase. This will set strict deadlines for completion of certain tasks.

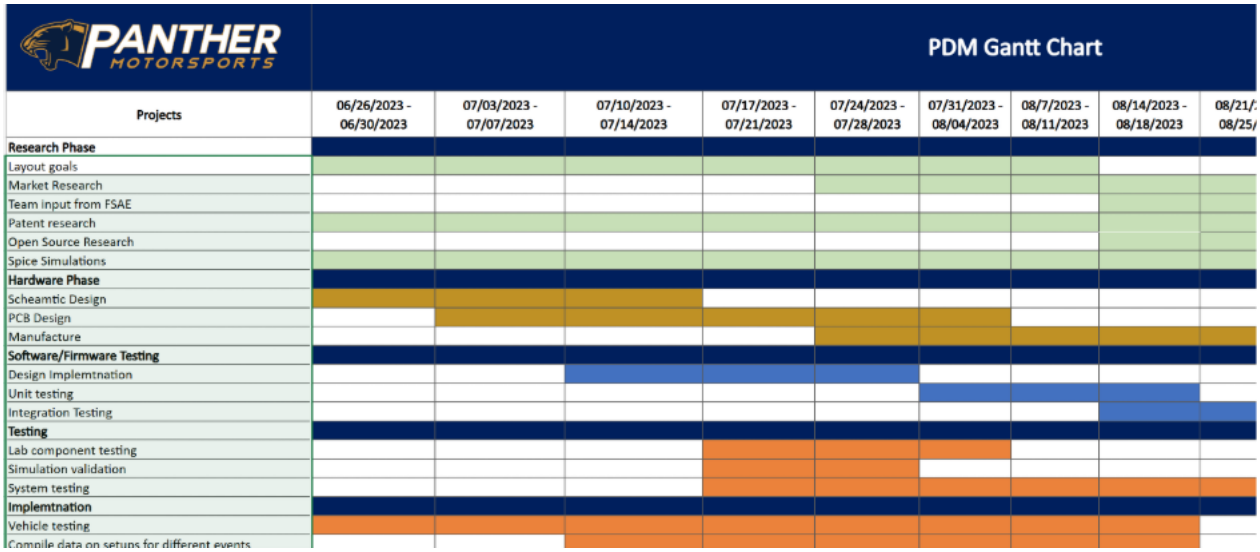

FIGURE XVI. GANT CHART

XX. MULTIDISCIPLINARY ASPECTS

The development of the Power Distribution Module for the Formula SAE race car brings together expertise from multiple engineering disciplines, ensuring a well-rounded approach to design, implementation, and testing

.

Firmware Development – Carlos Almagro (Team Leader):

- Oversees firmware design for real-time current sensing, CAN bus communication, and fault detection.
- Integrates hardware inputs and software logic to ensure seamless operation of the PDM.
- Coordinates system updates and troubleshooting to maintain stable performance during testing and competitions.

B. Hardware Design – Daniel Picado:

- Designs and develops the PCB layout, power stages, and protection circuitry for all output channels.
- Selects and qualifies components such as MOSFETs, sensors, and connectors, ensuring automotive-grade reliability.
- Implements thermal management and vibration-resistant mechanical mounting solutions.

C. Software Development – Jose Correa:

- Builds the configuration interface and diagnostic tools for PDM monitoring.
- Implements data-logging features and visualization dashboards for use during race preparation and post-race analysis.
- Integrates the GUI with firmware protocols to allow seamless updates and channel configuration.

D. Testing and Integration – Collaborative Effort:

- The team jointly develops and follows test protocols to validate electrical performance, communication reliability, and fault protection under race conditions.
- Conducts mock installations and in-vehicle evaluations to ensure the PDM meets spatial, thermal, and operational constraints.
- Prepares demonstration sessions for faculty, sponsors, and motorsport stakeholders to showcase functionality and ease of use.

Leadership and Planning:

- **Leadership Management:** Carlos Almagro provides direction and coordination across disciplines, ensuring tasks are prioritized and team members remain aligned with project goals.
- **Maintaining Momentum:** During breaks or periods of limited availability, clear documentation and communication are used to avoid delays and keep development moving forward.

Our multidisciplinary team combines expertise in embedded firmware, hardware design, and software development to create a reliable and innovative Power Distribution Module.. This

collaborative process makes sure the electrical, digital, and user-facing elements are all developed for a high-performance racing standard.

XXI. PERSONNEL

A. *Carlos Almagro*

1) WORK EXPERIENCE

Hardware System Engineering Intern **May 2025 – Present**
Meta; Menlo Park, CA

- Part of the Hardware Development & Release to Production team supporting and developing data center infrastructure for Meta specifically working on new training and interface hardware to accelerate artificial intelligence workflows
- Developing concurrent stress testing framework for the Meta Testing and Inferencing Accelerator using python in order to simulate maximum designed stress level at a system level and collect data to characterize inefficiencies or errors.
- Developing machine learning and LLM benchmark test using pytorch to validate hardware and silicon capabilities in real time catching silent data corruptions and analyzing silicon instruction execution before
- production workloads.
- Work cross-functionally with different teams such as silicon development, firmware development, software development, hardware engineers and production engineers to develop testing framework for the team.

Software Engineering Intern **May 2024 – August 2024**
Amazon – Amazon Photos; Seattle, Washington

- Part of the device personalization mobile development team at Amazon Photos working on developing iOS and Android apps to help customers curate their Alexa devices with their photo collections.
- Help developed production grade code for the Amazon Photos iOS and Android app using React Native for client facing applications and redux with RTK query to connect to backend REST APIs.
- Wrote unit tests using Jest and React Native test tools to cover edge cases to ensure production code doesn't fail at scale and meets the code base coverage thresholds.
- Participate in sprint plannings, design documentation and code reviews with the team in order to create goals and directives for internship projects.

Test Engineering Intern **January 2024 – May 2024**
Tesla; Fremont, California

- Analyzed data using Numpy, Pandas, PySpark and SQL to improve throughput for battery cell test equipment, rewrote Golang test scripts to increase manufacturing throughput by 10%.
- Developed and improved HMI systems for manufacturing equipment that utilized CAN to communicate with onboard battery pack controllers, used React, and Flask improving UI for hand ability and automating processes decreasing time wasted by 15 minutes per cycle.
- Designed PCB's and software using C that would help with fault-injection testing, safety implementations and improve test requirements helping test teams achieve test goals.

- Developed low level drivers in C/C++ for Linux embedded controller wrapped in python for a new test equipment on the battery manufacturing line that uses vision systems with a custom tool to avoid scrap.

Digital Electrical Engineering Intern **August 2022 – December 2022**
Ford Motor Company; Sunrise, Florida

- Contributed to testing and validating vehicle gateway products and ECUs' memory interfaces such as eMMC NAND FLASH, OSPI NOR FLASH, QSPI NOR FLASH, LPDDR4 and SPI NOR FLASH.
- Conducted signal integrity simulations on memory interfaces and PCB designs using ANSYS Siwave and validated simulation data using TDR or a VNA.
- Documented testing and simulations of memory interfaces on a report for future test reviews.
- Organized memory interface inventory by vendors, interface and memory density. Collaborated with engineers to keep an excel of all inventories at the office.

2) EDUCATION

- **Bachelor of Science,** Computer Engineering (in progress), Florida International University, Miami, FL
- **High School Diploma**, Archimedean Upper Conservatory, Miami, FL

3) KEY SKILLS

- *Firmware Development*
- *C++, C, Python, Typescript, Rust*
- *PCB Design (Altium/KICAD)*

B. ***Jose Correa***

1) WORK EXPERIENCE

Computer Support Specialist

J y J Med Spa, Miami, FL **April 2022 – May 2023**

- Offered technical assistance, resolved hardware and software issues, and ensured optimal system performance for users. As well as creating a website for business

Head Basketball Coach
Archimedean Upper Conservatory, Miami, FL **June 2021 – October 2021**

- Developed and implemented training programs, game strategies, and player development while leading and motivating team

Computer Science Expert

Mercor, Miami, FL **February 2025 – April 2025**

- Reviewed, validated, and enhanced prompt-based questions to support the development of AI tutoring systems. Leveraged deep expertise in algorithms, data structures, operating systems, databases, theory of computation, and software design to ensure the technical accuracy and educational effectiveness of AI-generated content.

Junior Software Engineer

Mercor Miami, FL **December 2024 – February 2025**

- Assessed AI-generated responses for accuracy, relevance, and adherence to prompts. Reproduced code in Replit, rated individual model outputs, and compared responses side-by-side to provide preference judgments, contributing to high-quality training data for model improvement.

2) EDUCATION

- Bachelor of Science, Electrical Engineering (in progress), Florida International University, Miami, FL
- **High School Diploma**, Archimedean Upper Conservatory, Miami, FL

3) KEY SKILLS

- *Excel*
- *C++, C, Python, javascript, react*
- *Solidworks*

C. ***Daniel Picado*** danielpicado01@gmail.com
(786)-564-2078

1) WORK EXPERIENCE

Savannah River National Laboratory, *May-August 2024*

Wearable Robotics Engineering Intern

- Deployment and testing of a robotic exoskeleton for glove box tasks across all DOE facilities, enhancing task efficiency, operator ergonomics, and minimizing fatigue.
- Conducted electromyography tests to measure muscle fatigue, assessing the impact of the exoskeleton on operator performance.
- Installed and assembled the complete EXO system for its first official mockup at a national lab.

Florida International University *Dec 2022 – Present*

Research Assistant Lead at ARC (Applied Research Center)

- Currently leading the Idaho National Lab Inspection Robot team at FIU, organizing and managing collaborative meetings involving professors, engineers, and technicians to maintain project momentum.
- Led the identification, evaluation, and acquisition of components and materials essential for building robotic systems, ensuring optimal performance and cost-effectiveness in the overall project.
- Innovated the design and manufacturing processes for machined or 3D-printed sub-components in rapid prototyping, facilitating the swift development and testing of prototypes for improved efficiency and precision.

Idaho National Laboratory *June-August 2023*

Nuclear Experiment and Materials Design Intern

- Engineered an innovative fuel rod sleeve for the THOR experiment, significantly improving temperature heat-sink overpower response and elevating the experiment's research capabilities.
- Devised a stability fixture for the TTUSC experiment in the ATR Reactor Canals, boosting stability on smaller diameter experiments and ensuring precision in testing, leading to more accurate and reliable results.
- Researched, designed, and implemented a robust wire harness for the TWIST experiment, capable of withstanding high-level temperatures and radiation, ensuring the experiment's success in the Transient Water Irradiation System in TREAT.
- Pioneered the use of high neutron cross-section ceramics for experimental applications in the TREAT reactor, advancing materials science and contributing to the progress of nuclear research.

2.) EDUCATION

- **Bachelor of Science,** Electrical Engineering (in progress), Florida International University, Miami, FL
- **Associate of Arts,** Mechanical Engineering, Miami Dade College, Miami, FL
- **High School Diploma**, Robert Morgan, Miami, FL

3.) KEY SKILLS

- KiCAD
- SolidWorks
- Multisim
-

XXII. BUDGET

When creating the Power Distribution Module for the Formula SAE race car, we must budget effectively to ensure every essential part of the system is fully funded. This section discusses the expected costs for equipment, fabrication, testing, and software development. We

want to allocate funds effectively, so we can build a cost-effective solution while ensuring there is no detriment to the reliability, performance, or safety for the end users.

The Power Distribution Module is planned to be budgeted at $100 covering the complete design, hardware, and testing package. We are keeping costs low by using internal fabrication tools in conjunction with open-source software where appropriate and doing so in line with good standards of safety and performance. This budget reflects our intent to deliver an inexpensive, dependable and innovative power distribution system to meet a competitive need in motorsports while raising the bar for student-built technology.

TABLE XVI. PCB LIST

MICROCONTROLLER	8.00
HIGH-SIDE POWER SWITCH	6.50
CURRENT SENSE RESISTORS	4.00
VOLTAGE REGULATOR	3.50
LOWRDS(ON) MOSFETS	30.00
CONNECTORS AND HEADERS	50.00
PCB FAB	50.00
MISCELLANEOUS PASSIVE COMPONENTS (CAPS, RESISTORS)	6.00
TOTAL	**55.00**

XXIII. RESULTS EVALUATION

Measures of success for the Power Distribution Module (PDM) project will be obtained through an evaluation process that assesses how well the output product meets defined metrics of success, meets design constraints, and meets electric automotive standards. Success will be based

on a combination of laboratory testing, simulation analysis, and in-vehicle testing to guarantee that the PDM is robust enough to operate under the controlled conditions of a Formula SAE race. The successful completion of the PDM will be evaluated in Senior Design II based on the following objectives and constraints:

A. Objectives to Be Met

The PDM will be evaluated against the following key objectives:

1. Electrical Performance:

- Provide stable power delivery to all critical vehicle subsystems with minimal voltage drop (<5% under load).
- Achieve precise, programmable current limits for each channel (accuracy within ±5%).
- Maintain switching response times under 1 ms for load activation and fault cutoff.

2. Fault Detection and Protection:

- Detect and isolate short circuits or overcurrent conditions within 2 ms.
- Successfully reset tripped circuits through firmware commands, eliminating the need for physical fuse replacement.
- Log and store at least 50 fault events for later diagnostics.

3. Data Communication and Diagnostics:

- Transmit live telemetry via CAN bus with an update rate of ≥10 Hz.
- Provide real-time fault reporting to the vehicle's data acquisition system with zero packet loss under normal operation.

4. Physical and Environmental Constraints:

- Operate safely in ambient temperatures from -10°C to 85°C.
- Withstand continuous vibration and mechanical shock experienced during racing events.
- Fit within the allocated 120 mm x 80 mm space envelope and weigh less than 150 grams.

5. System Reliability:

- Maintain a mean time between failures (MTBF) exceeding 500 race hours.
- Demonstrate resilience to transient battery voltage fluctuations and reverse polarity connection.

B. Constraints to Be Satisfied

- **Safety:** Comply with Formula SAE electrical safety rules, including overcurrent protection and emergency shutdown requirements.
- **Budget:** Remain within the approved materials and manufacturing cost limit of $200 per unit.

- **Power Limits:** Handle a peak current of 40 A per channel without thermal runaway or degradation of MOSFET performance.

C. Standards to Comply With

- **SAE Technical Regulations:** Compliance with the FSAE Electric and Internal Combustion Vehicle Electrical System Guidelines.
- **ISO 16750:** Road vehicles – Environmental conditions and testing for electrical and electronic equipment.
- **RoHS Compliance:** Selection of components free from hazardous materials to meet environmental safety standards.

D. Testing and Validation Approach

- **Bench Testing:** Verify voltage regulation, current limiting, and fault isolation in controlled conditions using a programmable power supply and electronic load banks.
- **Thermal Analysis:** Measure PCB and MOSFET operating temperatures under full load to confirm safe thermal margins.
- **CAN Bus Integration Testing:** Validate communication reliability with the vehicle ECU and data acquisition system.
- **In-Vehicle Testing:** Conduct on-track trials to evaluate real-world performance under dynamic load conditions and verify that all critical circuits operate without failure.

E. Patent and Intellectual Property Considerations

- The PDM design avoids infringement on existing commercial PDM patents by utilizing original firmware, open-source CAN protocols, and unique PCB architecture. Prior art searches will be conducted to ensure freedom to operate.

F. Evaluation Criteria Summary

The final PDM will be considered successful if it:

- Meets or exceeds all listed electrical, safety, and communication objectives.
- Passes environmental and reliability tests without critical failures.
- Provides measurable improvements in troubleshooting time and reliability compared to traditional fuse-based systems.
- Demonstrates compliance with all applicable standards and project constraints.

This evaluation process helps to ensure that the PDM design is functional, reliable, safe, competition ready, and satisfactory for the Formula SAE team. Ultimately providing a professional-level outcome.

G. Globalization Retrospective

Thanks to the prototype of the Power Distribution Module (PDM), it is now possible to benefit from the development of a global product and further expand to add additional functionality

to the product in a larger scope than what has been previously achieved. The intended purpose was to develop an easy-to-build and affordable (global) PDM that each university's student motorsport teams could design and manufacture with all materials available in their local area (or with the option to order parts internationally). In creating this design, the lack of sufficient funding resulted in an initial prototype having only one high-side/low-side power switching channel using a single BTN8982TA smart power switch. While this limitation ultimately reduced the ability to make the system 100% global, it did provide an additional emphasis on the modularity**, scalability, and minimum viable product principles associated with a global design.**

A. Changes in the Vision of Global Success

Originally, the intent of this project was to create a multi-channel PDM that would replace the extremely expensive commercial systems seen in Formula SAE. However, as the project developed it became clear that the only way to proceed with this project moving forward is through a single prototype-driven approach that validates one channel with all of the corresponding sensing, protection and CAN-bus communication features. This does not mean that we abandon our ambition to have a global impact for this project, but rather that we refocus the concept of global success into the areas of implementation feasibility, open documentation and scalable architecture.

Testing of a single-channel prototype demonstrated our electrical, firmware, and mechanical designs were adequate. Therefore, this prototype verified our overall design concept and provided a basis for continued expansion in the future. Through this experience our perception of global success evolved. Rather than believing that advanced overall functionality would lead to global acceptance, we realized that affordability, repairability, and incremental development were equally crucial factors for organizations that had limited financial resources. Subsequently our notion of global success changed from expecting a complete commercial solution that could be used as a direct replacement to a phased, modular solution that all global teams could develop at a slower pace as funds and manufacturing capabilities became available locally.

B. Effects of Design Changes on Barriers to Trade

A single BTN8982TA affected the project's ability to reduce global trade barriers in the construction of a prototype. Initially, our intention was to utilize multiple BTN devices, however, this would have greatly increased our costs and made it difficult for global product teams to source products through suppliers who have inconsistent supply chain patterns. By reducing the number of channels from that of the prototype, it decreased the financial impact on each team and provided them with the ability to create their own validation builds.

The prototype stages have also had an influence on the ways that both teams and suppliers evaluate their component availability. Although the BTN8982TA works and has broad user support, some teams reported differing levels of component availability, which highlighted the need to recommend other types of Smart High-Side Switches, as well as the importance of designing future PCB revisions to support footprint flexibility. These assessments also reinforced

the merits of modularity; by validating one channel from the prototype, it allowed for the future multichannel extensions to be built by the product teams without being forced to import a complete system. Teams now had the ability to build only the channels that they need, therefore reducing their costs, weights and storage/importation complexities.

The system was strengthened from the point of view of compliance by having a minimal bill of materials during the prototyping stage. This allowed for non-export restricted components to be utilized in constructing the PDM and reduced the number of countries where the PDM was being exported by allowing access to multiple distributors worldwide. The PDM, as a result, complied with the Principles of the World Trade Organisation (WTO). This includes fair trading practices, the right to source from open markets, and eliminating unnecessary barriers to imports.

C.) International Communication and End-of-Project Feedback

Most of the communication, unlike other forms of collaboration in the past, occurred on a Large number of Decentralised channels that engineering teams around the world were using to interact or share ideas. Engineering teams utilised Public Formula Student forums, Discord Channels created specifically for Electrical Subsystem Design, as well as Reddit Communities like r/FormulaSAE and r/ECE to communicate with one another and share ideas. This capability to communicate via these channels "Enabled rapid sharing of Design Drafts, Photograph Screenshots of the PCB, CAN Bus Message Layouts, and Sourcing Issues with Engineering Teams that were in Different Time Zones." The channels of communication used by these teams created an environment where their feedback was available quickly, which helped us to validate our direction.

As a result of the feedback provided to us via these channels of communication we received checks or feedback from teams located in Europe, South America and Asia which confirmed that the single-channel prototype we were developing would be an effective solution. Teams located in Germany and the United Kingdom also provided feedback that confirmed the Value of the Modular Structure of the Prototype. The feedback included that a fully validated single-channel design would be more useful to their teams than "A not fully validated multi-channel board." This feedback validated the direction we were taking in building this prototype as it allows for a Modular System and allows our teams to Create as Many Outputs as their vehicle would use at the time, rather than building a complete board with all outputs available at this time. Based on our experience, the teams confirmed that our Modular Architecture was the best solution and that we should continue to build around a Modular System and not to develop or build a fully populated board associated to the prototype at this time.

This retrospective on Globalization provides evidence that the PDM's growth has been enhanced by its development through limited resources, development of prototypes, and international collaboration. By developing a single-channel prototype to facilitate development of critical design choices, improve product documentation, zero in on the core of each function, and eliminate sourcing obstacles, the prototype enhanced the PDM's ability to be globally utilized. The development of the prototype from an entire system to modular prototypes enables a more user-friendly design that can be integrated easily into the international student community's environment, while facilitating integration with the principles of International Trade (IT).

The end-of-project reporting to the international teams demonstrated that the prototype development model was congruent with the needs of an international Formula Student team. This project will provide the framework for future scalable and globally accessible PDM architecture,

which future teams will be able to build upon based on their local infrastructure and continued development of technical requirements.

XXIV. LIFE LONG LEARNING

Taking the Power Distribution Module (PDM) from a university effort to a commercial product will require the habits of continuous learning and professional development. It's essential to stay informed and current with technological advancements because various aspects of automotive power systems are changing rapidly, and it is critical to enhance the PDM for future applications.

As evidenced by the bullet list above, a key step in accomplishing this is participating in professional organizations such as IEEE and SAE International. As a member of an experienced organization, you will have access to many technical publications, engineering standards, and various networking opportunities with engineers, and stay aware of technical issues that can impact your career and the PDM as an enhanced product. All of these resources will not only help you learn beyond the classroom but also help you check your assumptions against industry standards of best practices and learn about the recent developments in embedded systems, power electronics, and vehicle communication protocols.

Participation in industry conferences and workshops will also be a fundamental part of professional development. Conferences specific to automotive innovation, motorsport engineering, and vehicle electrification provide real-time exposure to cutting-edge technologies and knowledge enrichment through conversations with experts in the field. These events and activities create ongoing opportunities to foster a culture of continuous improvement and encourage the team to improve the PDM design over time as new technologies progress.

To build on the technical knowledge gained by attending conferences and events, the team will engage in advanced learning through specialized courses and certifications. Functional safety (ISO 26262), advanced PCB design, and knowledge of automotive networking protocols, such as CAN FD or Automotive Ethernet, will give the team a more in-depth grasp of the systems with which the PDM interacts. Online learning platforms such as Coursera, edX, and the IEEE Learning Network offer a variety of flexible and contemporary learning pathways that allow for continued skill development.

A commitment to lifelong learning ensures that the PDM continues to provide value based on the evolving technical specifications and sets a precedent and mindset for the team to continue to adapt their engineering practices when delivering future projects. Developing their knowledge on an ongoing basis gives the team every opportunity to be creative and innovative, contribute to the advancement of automotive electronics, and continue to build on their professional development skills for future careers.

XXV. CONCLUSION

The Power Distribution Module project stemmed from an important need from within the Formula SAE team to upgrade and enhance the vehicle's electrical power management system. Using fuse and relay systems are proven and functional systems, but have not been efficient and can be difficult to troubleshoot and can fail in competition due to racing conditions. Using team brainstorming sessions, a survey of past performance issues of the vehicle, and feedback from the drivers and student engineers, the idea of a programmable solid-state PDM emerged as a useful innovation to improve reliability, safety, and diagnostics in competition.

The goals of this project were to design and develop a lightweight, compact, cost-effective, PDM which can electrically control, protect, and monitor all of the race car's major power circuits. The major technical goals included: programmable overcurrent protection, remote reset, live telemetry over CAN bus, and fast fault detection to minimize track downtime. In this proposal we have elaborated on the technical, environmental, and sustainability requirements of our goals to adhere to FSAE rules and industry standards.

The activities undertaken to complete this system included requirements analysis, feasibility studies, and preliminary design review of the hardware and firmware architectures. We explored commercial automotive PDMs, sourcing high-side switch components, and conceptual modeling of module integration with the vehicle ECU and data acquisition systems. These activities supported the feasibility of the Team making a custom-built PDM, and we can confirm it is achievable within the proposed budget, time frame, and scope of technical resources.

As described in Section XXIII, the results evaluation procedure has provided a formalized method of testing and verifying the final design. The bench tests, environmental stress tests, and on-vehicle tests will ensure that the PDM passes electrical performance, safety, and communication tests, prior to deployment, and serves as the measures to ensure readiness for competition, as well as serving as a repeatable method for future versions of the module.

The deliverables as at the outset of the project are expected to benefit the Formula SAE team by improving reliability, reducing troubleshooting time, and achieving data-driven diagnostics for power distribution events. Additionally, the project is expected to contribute to the automotive engineering industry because it highlights a low-cost and competent approach for high-performance vehicles for reliability and safety, while previous developments have relied on traditional mechanical fuses and relays.

Ultimately, this project has been a crucial milestone in our progression as student engineers, demanding that we apply knowledge from several disciplines of embedded systems, power electronics, firmware design, and systems engineering. The knowledge gained from developing an actual real-world, competition-ready PDM promotes lifelong learning with respect to automotive electronics and positions the team to pursue future advancements in intelligent power management and vehicle control systems.

XXVII. SIGNATURES PAGE

Course Number: EEL 4920 Semester: Summer Year: 2025

Mentor Name: Konstantinos Zekios

Senior I Instructor's Name: Wilmer Arellano

Name	PID	E-mail Address	Phone Number
Carlos Almagro	6302932	Calma016@fiu.edu	786-451-1693
Jose Correa	6275753	Jcorr138@fiu.edu	786-241-7763
Daniel Picado	6197171	Dpica006@fiu.edu	786-572-4181

	PRINT	SIGNATURE	DATE
Team Leader	Carlos Almagro		12/1/25
Team Member	Jose Correa		12/1/25
Team Member	Daniel Picado		12/1/25
Mentor	Konstantinos Zekios		12/1/25

XXVI. REFERNCES

[1] Kettering University, "Braydin Jones '25 (Electrical Engineering) tackled a critical challenge for Kettering University's Formula SAE team," Facebook, Jun. 19, 2025. [Online]. Available: https://www.facebook.com/KetteringUniversity/photos/braydin-jones-25-electrical-engineering-tackled-a-critical-challenge-for-ketteri/1166633935506549/?_rdr

[2] Motec, "MoTec PDM15 Power Distribution Module," Modern Racing, [Online]. Available: https://modernracing.net/products/motec-pdm15-power-distribution-module

[3] Reddit user, "Market options for PDM (power distribution module)," Reddit, r/FSAE, Sep. 20, 2023. [Online]. Available: https://www.reddit.com/r/FSAE/comments/16m73pj/market_options_for_pdm_power_distribuition_module/

[4] Sindri Þ. Harðarson, “Formula Student – Power Distribution Module,” STLabs, [Online]. Available: https://stlabs.is/project5

[5] Bob Stasonis, "Electromechanical Relays" PickeringTest.com, [Online]. Available: https://blog.pickeringtest.com/electronic-testing-101-the-different-types-of-relays-and-their-specs

[6] RS https://www.reddit.com/rUKSAE/comments/16m73pj/market_options_for_pdm_power_distribution_module//web/content/discovery/ideas-and-advice/fuses-guide

[7] Capt. Frost, "Differential Smplifier" electronics.Stackexchange, Aug 30, 2018. [Online]. Available: https://electronics.stackexchange.com/questions/393488/simple-op-amp-setup-for-current-sense-has-a-strange-working-range

[8] John Griffith, "CAN oscilloscope waveform," TI, 2023. [Online]. Available: https://www.ti.com/document-viewer/lit/html/SSZTCN3

[9] Timon Alferink, "CAN system overview," kmpdrivetrain, 29 Aug 2017. [Online]. Available: https://www.kmpdrivetrain.com/paddleshift/practical-tips-can-bus/

[10] Sangharsh, "Different driver configurations," circuitdigest, 30 Aug 2018. [Online]. Available: https://circuitdigest.com/forums/embedded/difference-between-open-drain-and-push-pull

[11] Pascal, "Block diagram behind the PHY," electronics. Stackexchange, 2 Dec 2019. [Online]. Available: https://electronics.stackexchange.com/questions/469940/how-does-a-can-transceiver-work

[12] Davide Mantoan, " Solid-State Relay Harvesting Power from Load by Measuring Zero Crossing" 26 Sep 2023 [Online]. Available: https://patents.justia.com/assignee/littelfuse-inc?page=5

[13] Juergen Scheele, Julio Cesar Urrea, Kerri Michelle Hood, " Flexible Power Distribution Module Cover Assembly "Google Patents, 18 Jun 2015. [Online]. Available: https://patents.google.com/patent/US9415730B2/en?oq=US-9415730-B2

[14] Lyle Stanley Bryan, John Steven Cowan, " Solid-State Pre-Charge Module," Google Patent, 04 Oct 2007. [Online]. Available: https://patents.google.com/patent/US8203810B2/en?oq=US%E2%80%AF8203810%E2%80%AF

Option 1: Low-Level Circuitry (Fully Custom Design)

Pros:
- Maximum control and fine-tuning of the circuit
- Easy to swap components; widely available parts
- No IP issues or vendor restrictions
- Lower cost at scale
- Simple to prototype

Cons:
- Higher chance of design errors
- Limited testing → lower reliability
- Performance may be less accurate than specialized automotive parts

Option 2: High-Level Design (Integrated Driver ICs)

Pros:

- Uses proven, automotive-grade components
- Reduced design complexity → focus on full system
- Strong reliability and documentation

Cons:

- Less control over internal circuitry
- Higher cost for specialized components
- Limited customization