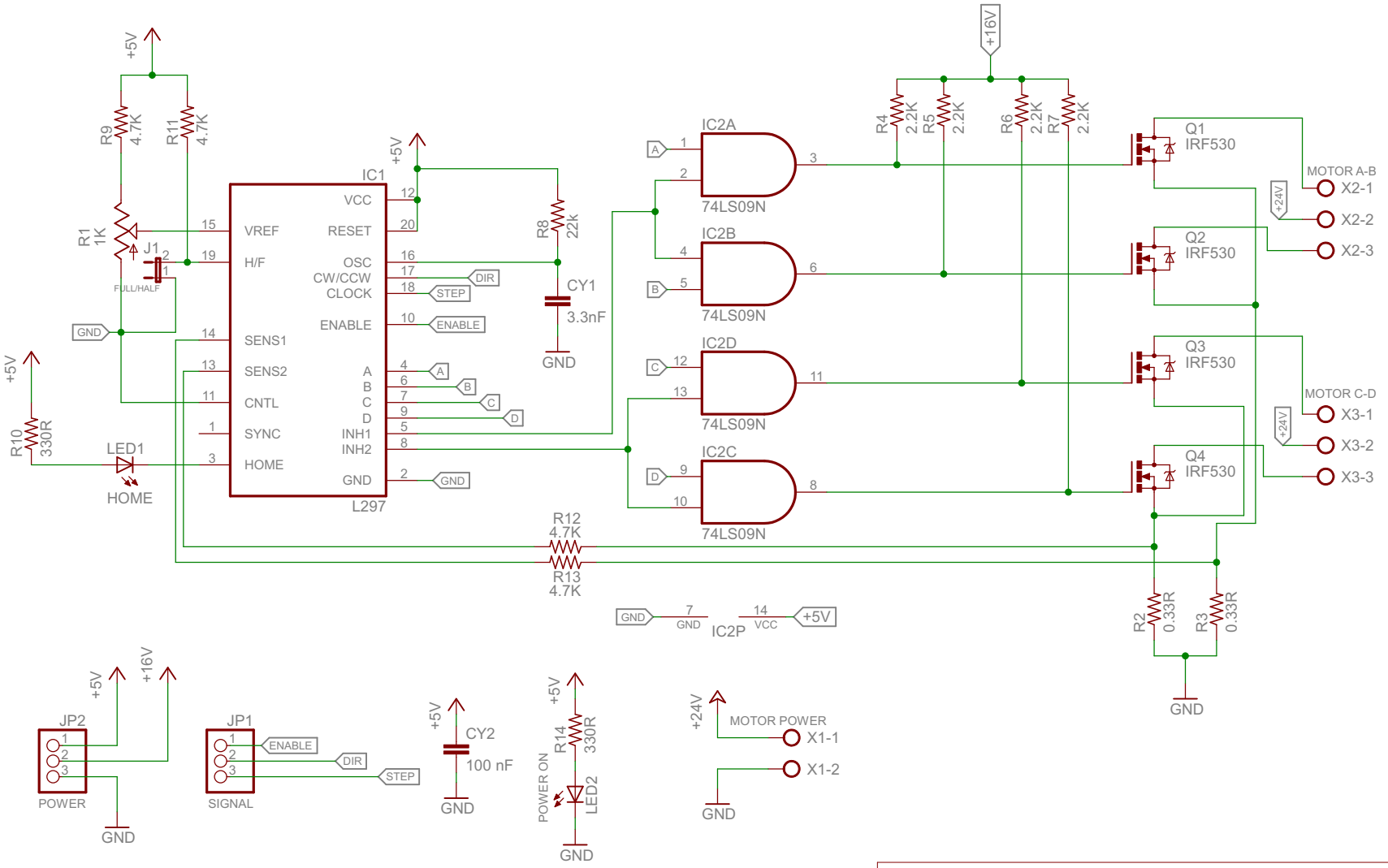

Unipolar Stepper Motor Driver

by Bulek

TITLE: Stepper Motor Driver v1.0	
Document Number:	REV: 1
Date: 30/03/2013 04:01:02	Sheet: 1/1