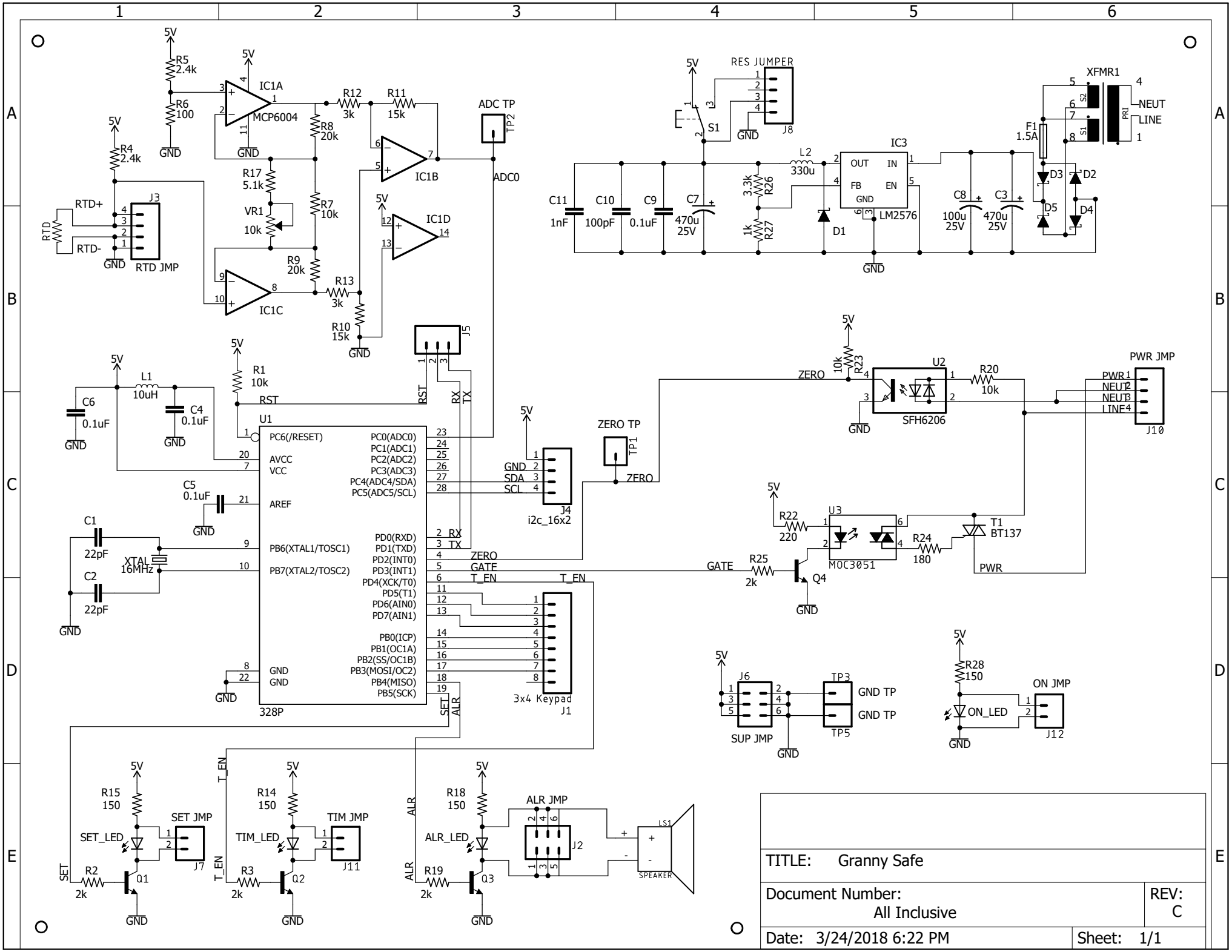
TITLE: Granny Safe
Document Number: All Inclusive
REV: C
Date: 3/24/2018 6:22 PM
Sheet: 1/1
MCP6004
IC1A
IC1B
IC1C
IC1D
ADC TP
ADC0
RTD JMP
RES JUMPER
XFMR1
NEUT
LINE
LM2576
IC3
SFH6206
U2
PWR JMP
ZERO TP
i2c_16x2
328P
U1
XTAL 16MHz
3x4 Keypad
M0C3051
U3
BT137
T1
SUP JMP
GND TP
ON JMP
ON_LED
SET JMP
TIM JMP
ALR JMP
SPEAKER
SET_LED
TIM_LED
ALR_LED