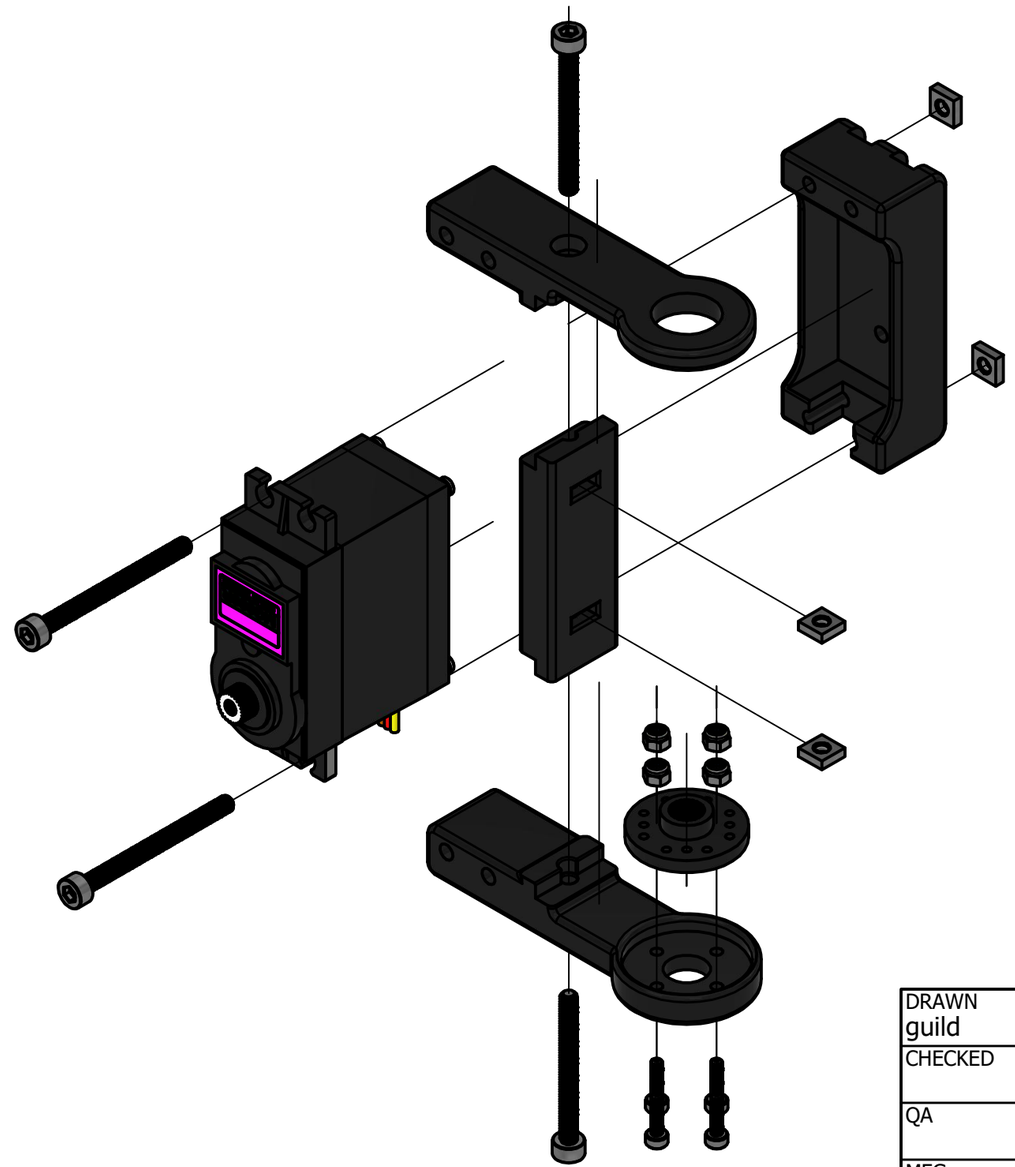

DRAWN guild	4/12/2026	
CHECKED		TITLE
QA		
MFG		
APPROVED		
		SIZE B · DWG NO coxa · REV
		SCALE 1 : 1 · SHEET 1 OF 1