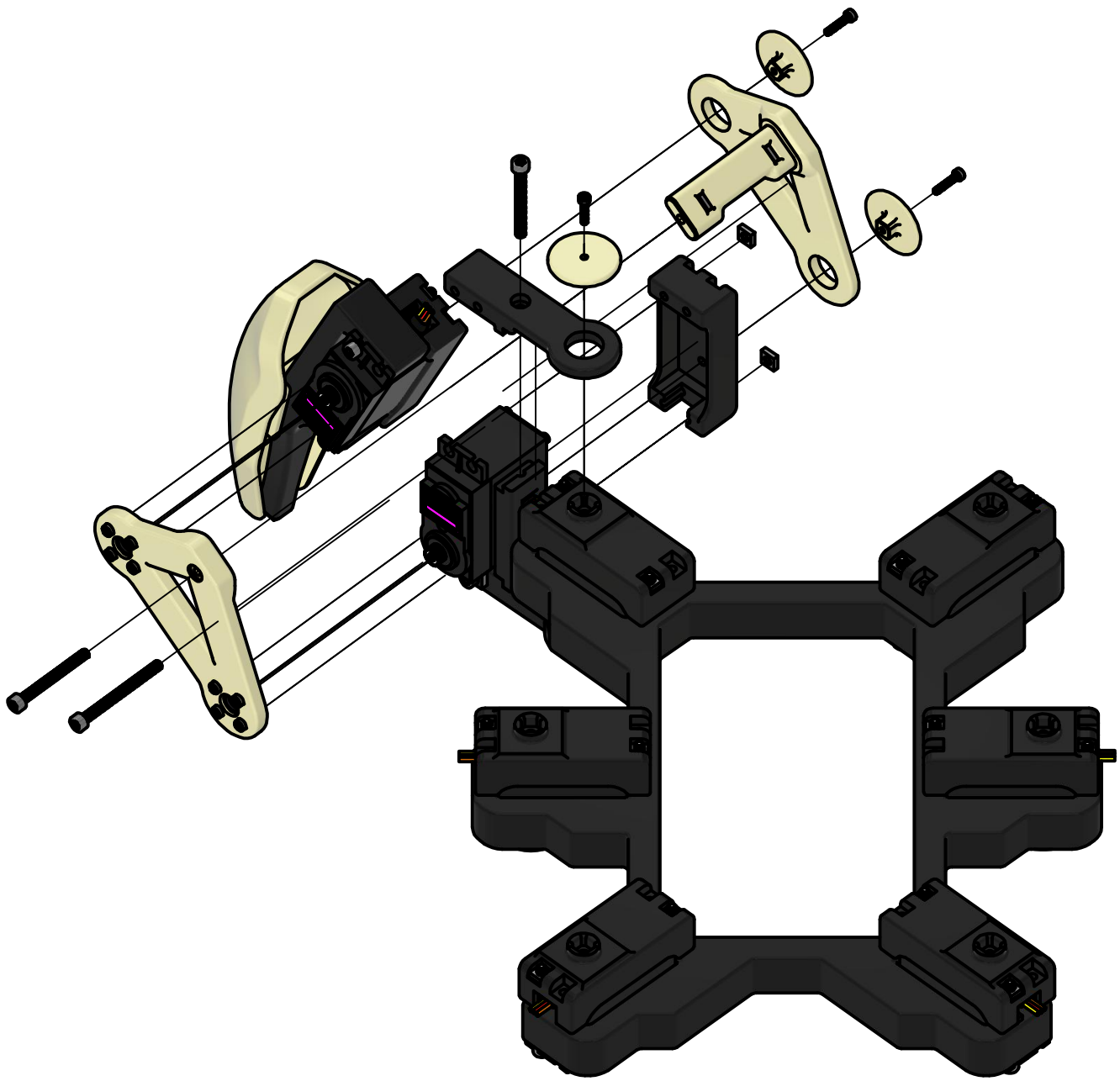

DRAWN guild	4/12/2026				
CHECKED		TITLE			
QA					
MFG					
APPROVED		SIZE A		DWG NO fram+legs	REV
		SCALE 1 / 2		SHEET 1 OF 1	