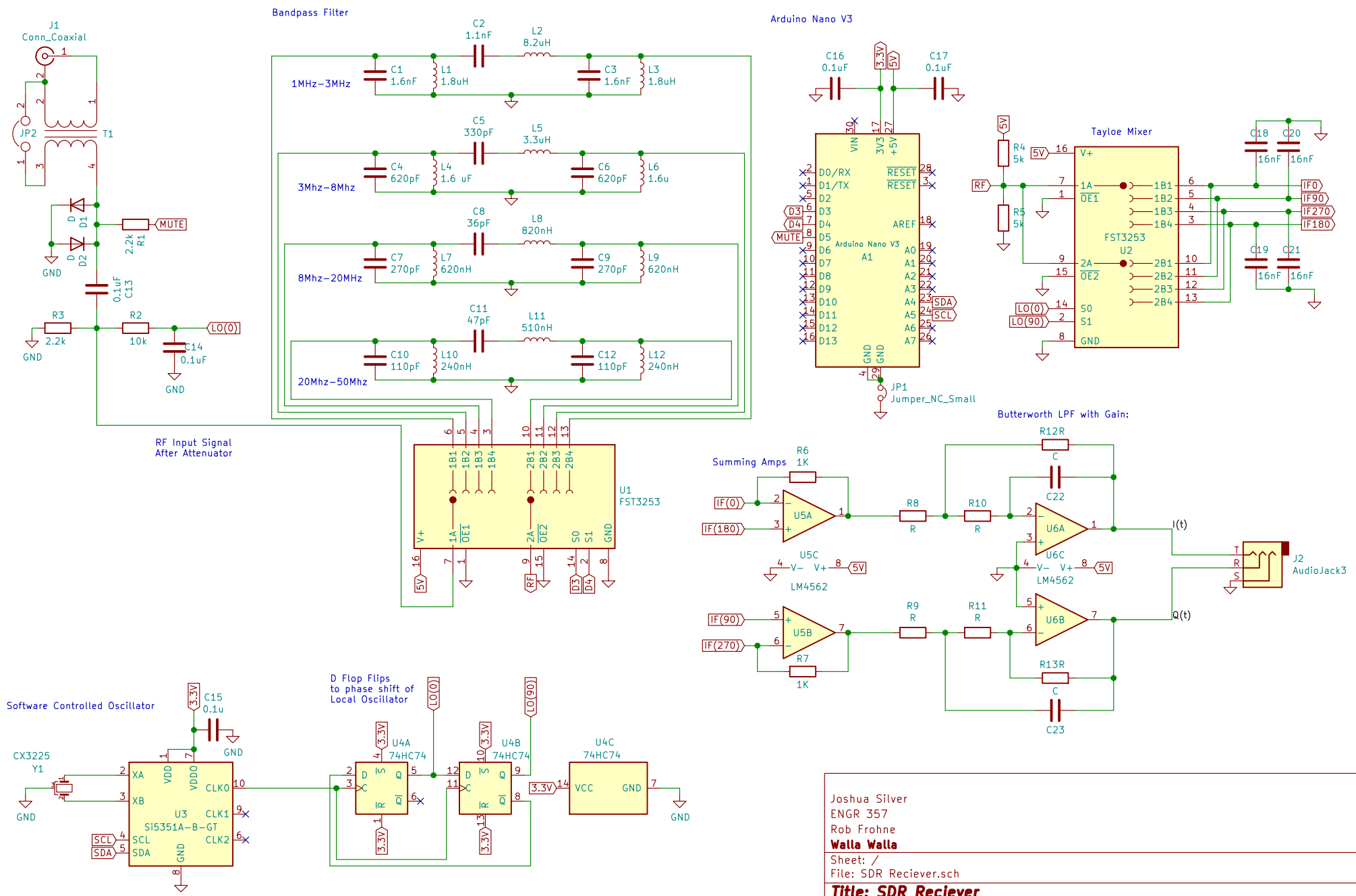
Bandpass Filter
1MHz-3MHz
3Mhz-8Mhz
8Mhz-20MHz
20Mhz-50Mhz
Arduino Nano V3
Tayloe Mixer
FST3253
U2
U1
RF Input Signal
After Attenuator
Summing Amps
Butterworth LPF with Gain:
LM4562
AudioJack3
Software Controlled Oscillator
CX3225
Y1
Si5351A-B-GT
D Flop Flips
to phase shift of
Local Oscillator
74HC74
Joshua Silver
ENGR 357
Rob Frohne
Walla Walla
Sheet: /
File: SDR Reciever.sch
Title: SDR Reciever
Size: A4
Date: 2020-04-14
Rev:
KiCad E.D.A. kicad (5.1.5)-3
Id: 1/1