FRM1053

QTY:___

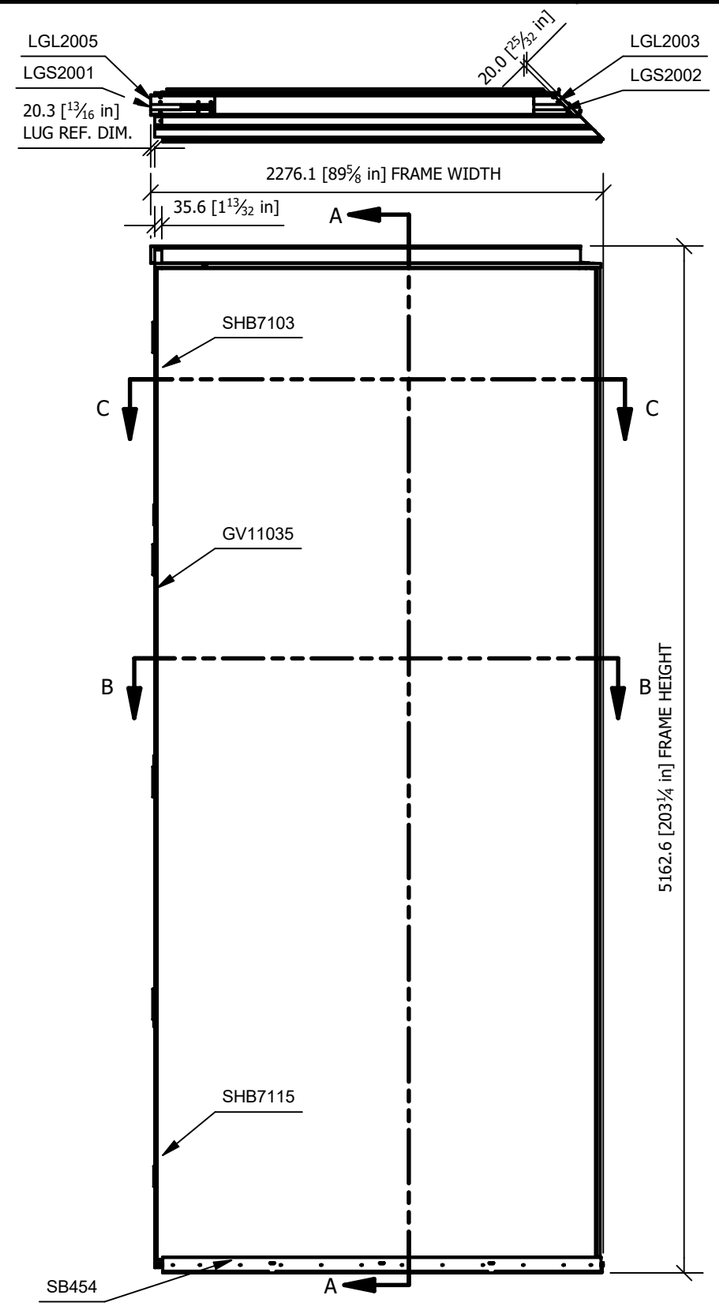

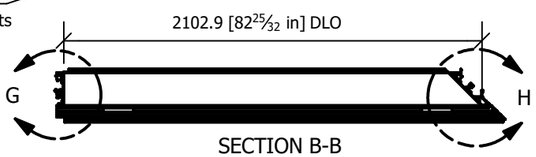

SECTION B-B
SCALE 1/30

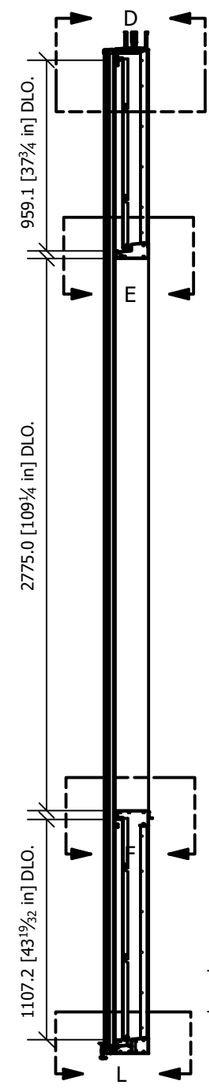

SECTION A-A
SCALE 1/30

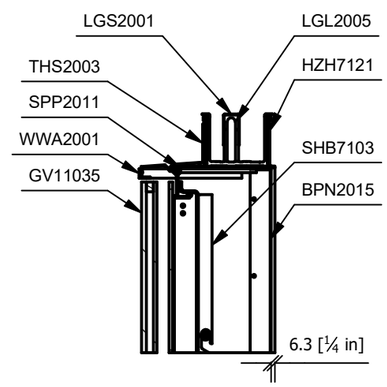

DETAIL D
SCALE 1 / 10

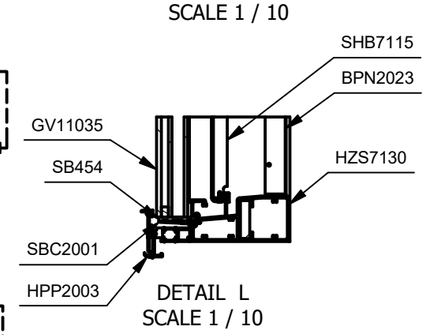

DETAIL L
SCALE 1 / 10

SECTION C-C
SCALE 1/30

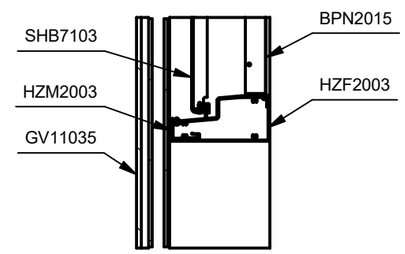

DETAIL E
SCALE 1 / 10

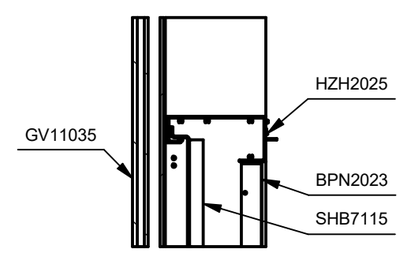

DETAIL F
SCALE 1 / 10

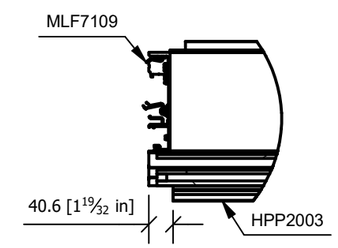

DETAIL G
SCALE 1 / 10

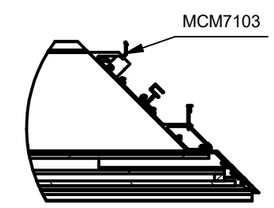

DETAIL H
SCALE 1 / 10

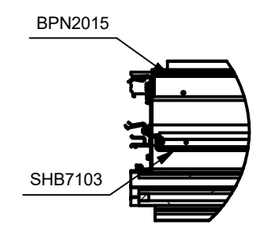

DETAIL J
SCALE 1 / 10

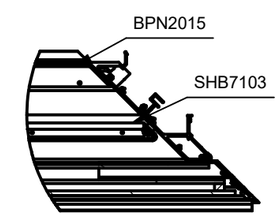

DETAIL K
SCALE 1 / 10

PART	QTY	EXTRUSION NO	DESCRIPTION	LENGTH	DWG	FINISH
BPN2015	1	STEEL SHEET, 20 Ga. (.04in), GMS	BACK PAN	77 9/16 x 38 1/8	Y	GALVANIZED
BPN2023	1	STEEL SHEET, 20 Ga. (.04in), GMS	BACK PAN	77 9/16 x 41 31/32	Y	GALVANIZED
GV11035	1	GV1	GLASS VISION	86 23/32 x 196 1/32	N	NA
HPP2003	1	ACS100764	HORZ PRESS PLATE	86 3/4	N	MILL
HZF2003	1	ACS100817	HORZ FILLER	82 5/8	N	ANODIC ICE YW201E
HZH2025	1	ACS100839	HORZ HEAD	82 25/32	N	ANODIC ICE YW201E
HZH7121	1	NA	HORZ HEAD, SUB-ASSEMBLY	88 3/8	Y	NA
HZM2003	1	ACS100816	HORZ MAIN	82 25/32	N	ANODIC ICE YW201E
HZS7130	1	NA	HORZ SILL, SUB-ASSEMBLY	88 13/16	Y	NA
LGL2003	1	ACS100805	LUG LIFTING	7 7/8	Y	MILL
LGL2005	1	ACS100805	LUG LIFTING	12 11/16	Y	MILL
LGS2001	1	TB492	LUG SLIDER	6	Y	BLACK
LGS2002	1	TB492	LUG SLIDER	6 3/4	Y	BLACK
MCM7103	1	NA	MULL COR MALE, SUB-ASSEMBLY	198 19/32	Y	NA
MLF7109	1	NA	MULL FEMALE, SUB-ASSEMBLY	198 19/32	Y	NA
SB454	2	SB454	SETTING BLOCK	6	N	BLACK
SBC2001	2	ACS100806	SET BLOCK CHAIR	6	Y	PRE-ANODIZED
SHB7103	1	NA	SHADOW BOX, SUB-ASSEMBLY	80 13/32 x 38 1/2	Y	NA
SHB7115	1	NA	SHADOW BOX, SUB-ASSEMBLY	80 13/32 x 44 13/16	Y	NA
SPP2011	1	PVC SHEET, 1/16 THK.	SPACER, PVC	5	Y	ANY
THS2003	1	TS423	THERMAL SHIELD	84 5/8	N	BLACK
WWA2001	1	NA	WINDOW ANCHOR	7 3/4	Y	MILL

ALUMINUM CURTAINWALL SYSTEMS INC.
1820 KRYCZKA PLACE
KAMLOOPS, B.C. V1S 1S4
PHONE: (250) 374-7306

Description: FRAME, 8D666				Release
Frame Size: 89 5/8 x 203 1/4				
Drawn By: L-ZV	Designed By:	Rev	Rel	Date
Chkd By:	Date:			
Contract No. 14923	Drawing Name: FRM1053			
Job: 1133 MELVILLE				