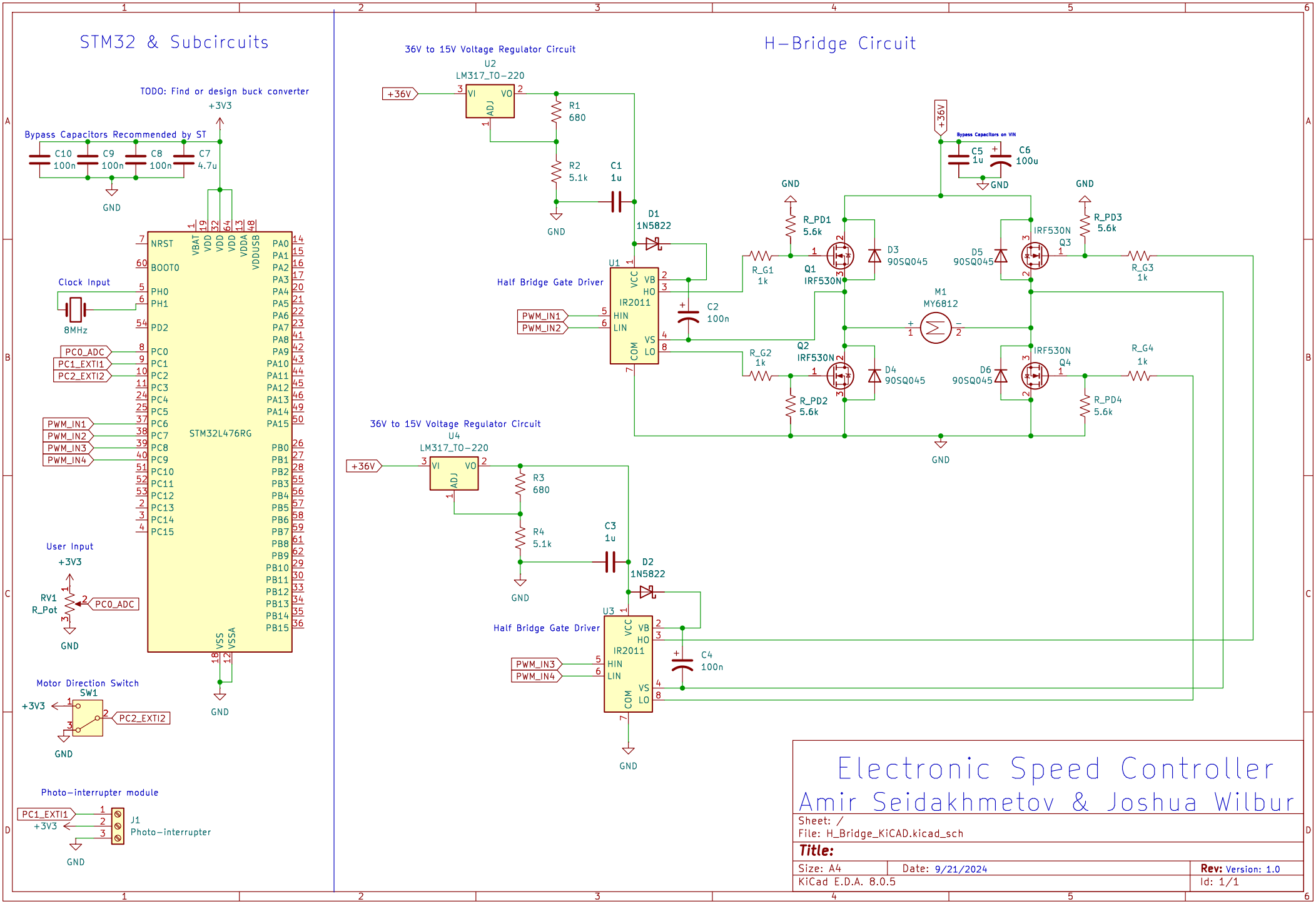
STM32 & Subcircuits
TODO: Find or design buck converter
+3V3
Bypass Capacitors Recommended by ST
C10 100n
C9 100n
C8 100n
C7 4.7u
GND
STM32L476RG
NRST
BOOT0
PH0
PH1
PD2
PC0
PC1
PC2
PC3
PC4
PC5
PC6
PC7
PC8
PC9
PC10
PC11
PC12
PC13
PC14
PC15
PA0
PA1
PA2
PA3
PA4
PA5
PA6
PA7
PA8
PA9
PA10
PA11
PA12
PA13
PA14
PA15
PB0
PB1
PB2
PB3
PB4
PB5
PB6
PB7
PB8
PB9
PB10
PB11
PB12
PB13
PB14
PB15
VBAT
VDD
VDD
VDD
VDDA
VDDUSB
VSS
VSSA
Clock Input
8MHz
PC0_ADC
PC1_EXTI1
PC2_EXTI2
PWM_IN1
PWM_IN2
PWM_IN3
PWM_IN4
User Input
RV1
R_Pot
Motor Direction Switch
SW1
Photo-interrupter module
PC1_EXTI1
J1
Photo-interrupter
H-Bridge Circuit
36V to 15V Voltage Regulator Circuit
U2
LM317_TO-220
+36V
VI
VO
ADJ
R1 680
R2 5.1k
C1 1u
D1 1N5822
Half Bridge Gate Driver
U1
IR2011
VCC
VB
HO
HIN
LIN
VS
COM
LO
C2 100n
R_G1 1k
R_G2 1k
R_PD1 5.6k
R_PD2 5.6k
Q1 IRF530N
Q2 IRF530N
D3 90SQ045
D4 90SQ045
Bypass Capacitors on VIN
C5 1u
C6 100u
M1 MY6812
D5 90SQ045
D6 90SQ045
IRF530N Q3
IRF530N Q4
R_PD3 5.6k
R_PD4 5.6k
R_G3 1k
R_G4 1k
36V to 15V Voltage Regulator Circuit
U4
LM317_TO-220
R3 680
R4 5.1k
C3 1u
D2 1N5822
Half Bridge Gate Driver
U3
IR2011
C4 100n
Electronic Speed Controller
Amir Seidakhmetov & Joshua Wilbur
Sheet: /
File: H_Bridge_KiCAD.kicad_sch
Title:
Size: A4
Date: 9/21/2024
Rev: Version: 1.0
KiCad E.D.A. 8.0.5
Id: 1/1