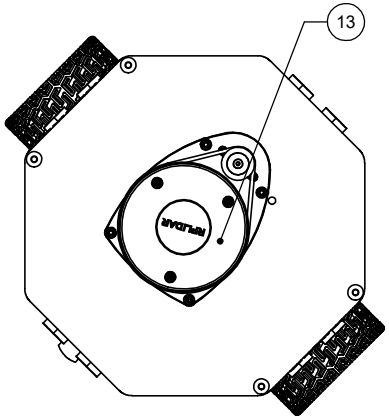

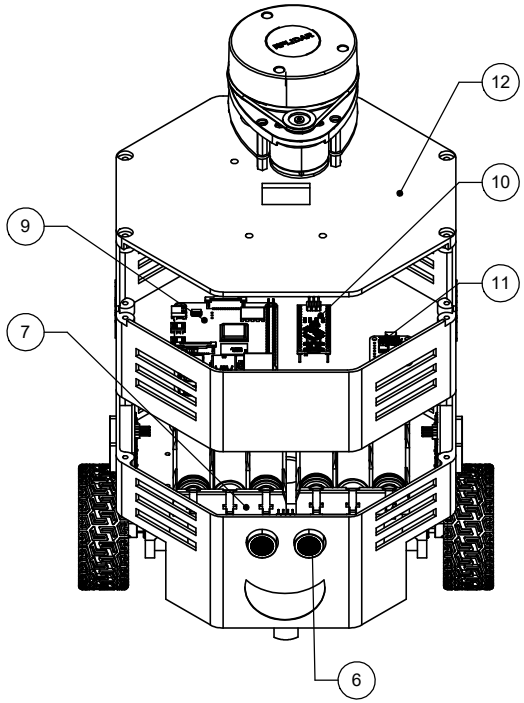

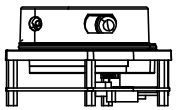

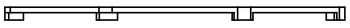

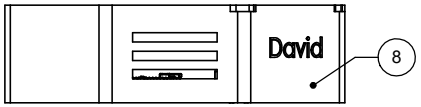

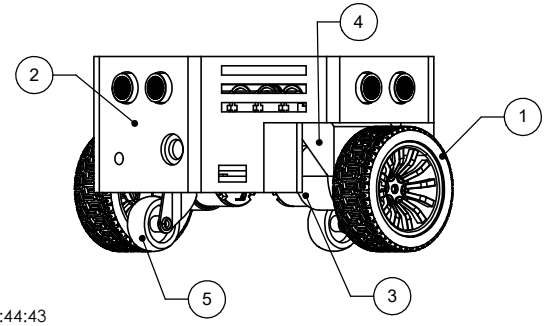

ITEM NO.	PART NUMBER	DESCRIPTION	QTY.
1	68mm wheel	Wheels for the AMR	2
2	Base	This is the Base of the AMR	1
3	JGB37-520	DC motor With Encoder	2
4	MM-JGB37 v4	L Bracket for DC Motor	2
5	Caster-swivel-40mm	Swivel Caster Wheel	2
6	HC-SR04	Ultrasonic Sensor	4
7	BatteryHolder3S	3S - Battery Holder	2
8	Layer1	Second Link of the AMR	1
9	Raspberry Pi 4 Model B	Micro computer to handle complex computing for AMR	1
10	arduino nano	Microcontroller to handle control and reflex actions of the AMR	1
11	Adafruit BNO085	Inertia measuring unit(IMU)	1
12	Top	Last link for the AMR	1
13	LIDAR	Sensor to be used for mapping	1

Saturday, 22 November 2025 19:44:43

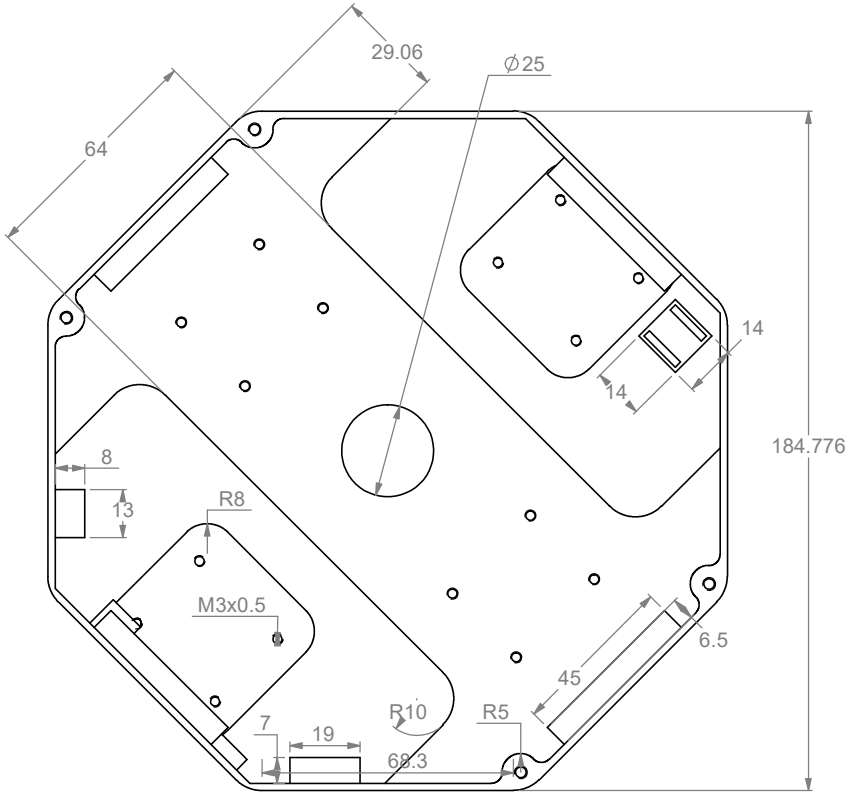

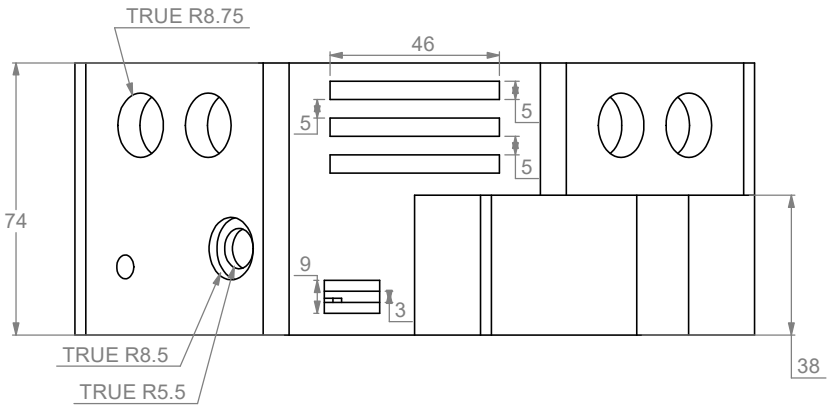

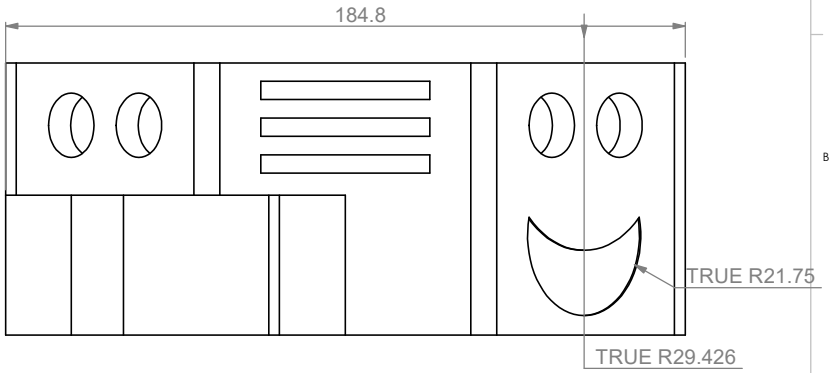

Saturday, 22 November 2025 20:18:25

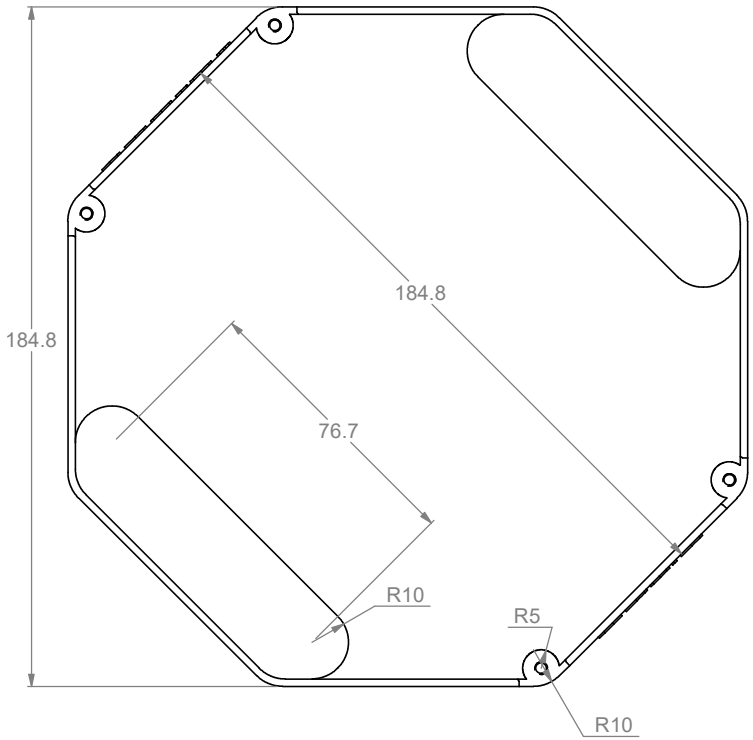
184.8
184.8
184.8
76.7
R10
R5
R10

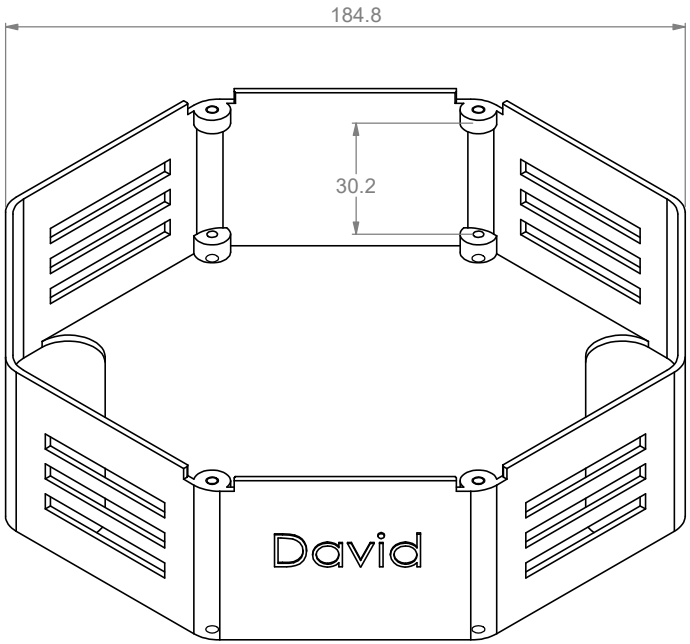
184.8
30.2
David

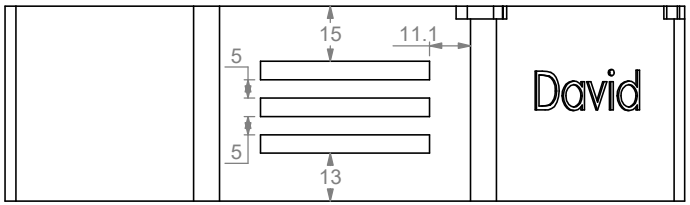
15
11.1
5
5
13
David

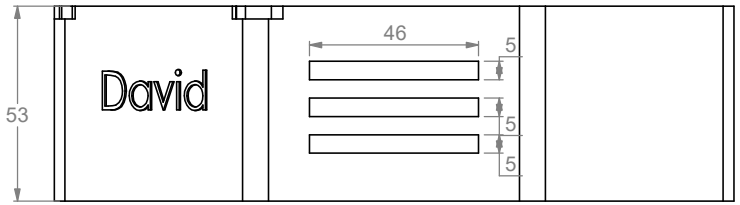
46
5
5
5
53
David

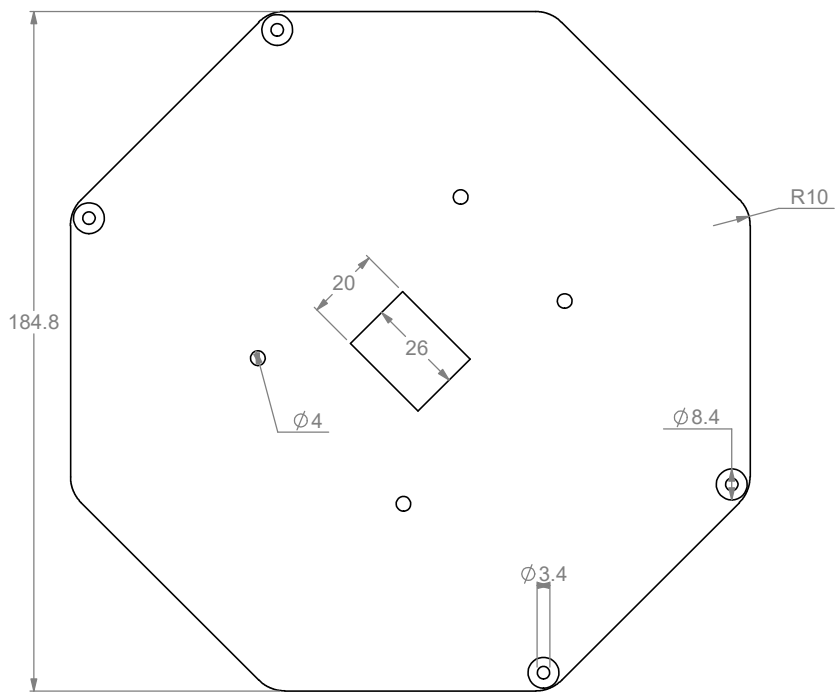
184.8
R10
20
26
∅4
∅8.4
∅3.4

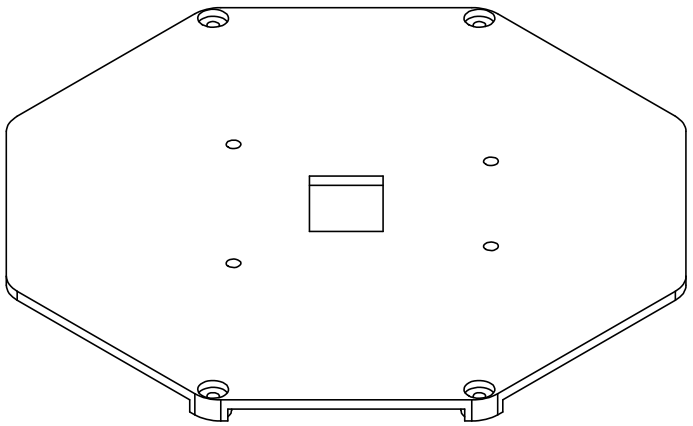

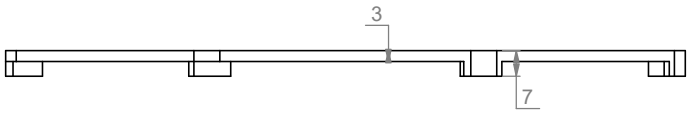
3
7

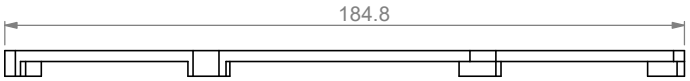
184.8