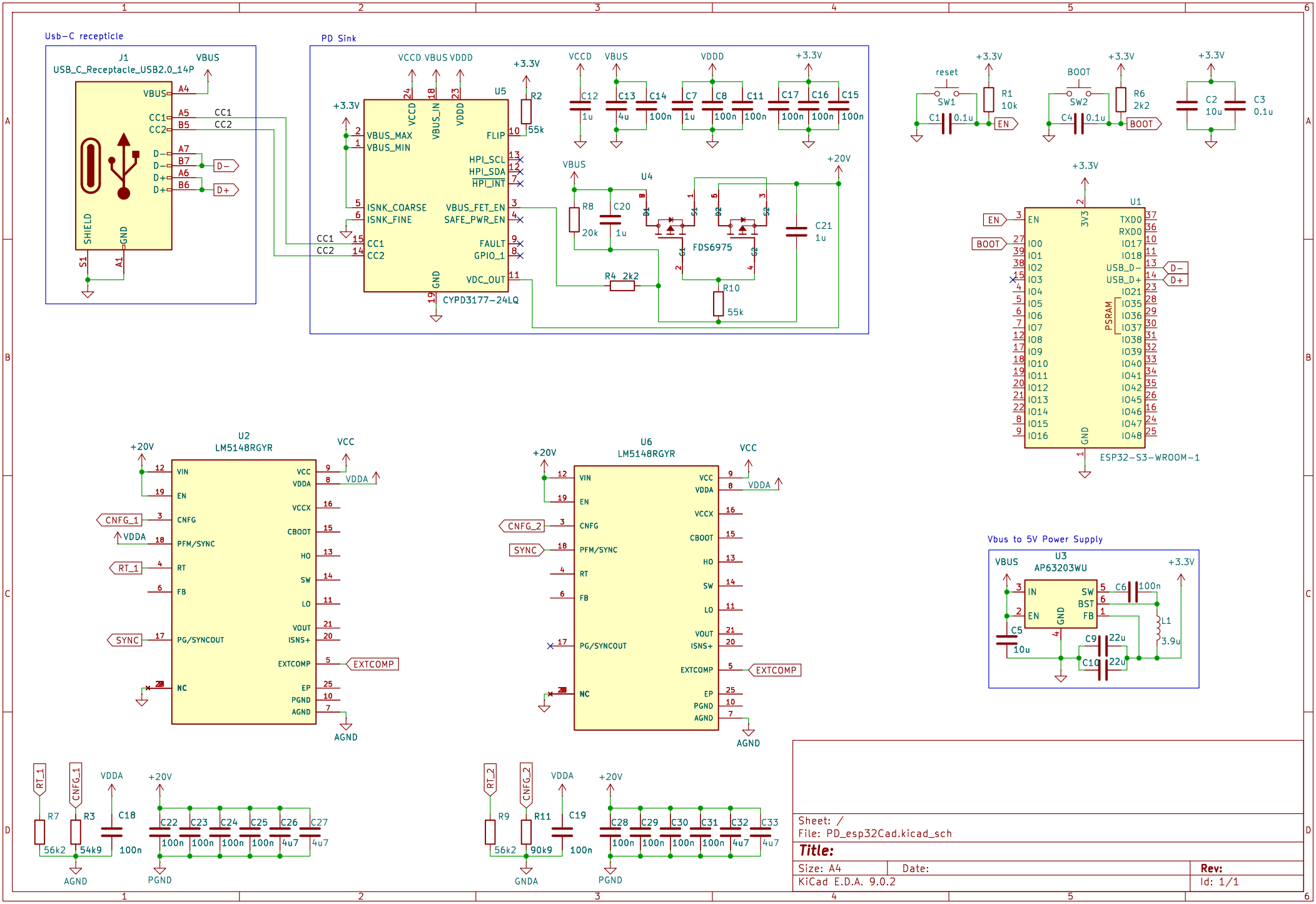
Usb-C recepticle
J1
USB_C_Receptacle_USB2.0_14P
VBUS
CC1
CC2
D-
D+
SHIELD
GND
S1
A1
PD Sink
U5
CYPD3177-24LQ
VCCD VBUS VDDD
+3.3V
VBUS_MAX
VBUS_MIN
VBUS_IN
FLIP
HPI_SCL
HPI_SDA
HPI_INT
ISNK_COARSE
ISNK_FINE
VBUS_FET_EN
SAFE_PWR_EN
FAULT
GPIO_1
VDC_OUT
R2
55k
C12 1u
C13 4u
C14 100n
C7 1u
C8 100n
C11 100n
C17 100n
C16 100n
C15 100n
+20V
U4
FDS6975
R8 20k
C20 1u
R4 2k2
R10 55k
C21 1u
reset
SW1
R1 10k
C1 0.1u
EN
BOOT
SW2
R6 2k2
C4 0.1u
C2 10u
C3 0.1u
U1
ESP32-S3-WROOM-1
3V3
TXD0
RXD0
USB_D-
USB_D+
PSRAM
U2
LM5148RGYR
VIN
EN
CNFG
PFM/SYNC
RT
FB
PG/SYNCOUT
NC
VCC
VDDA
VCCX
CBOOT
HO
SW
LO
VOUT
ISNS+
EXTCOMP
EP
PGND
AGND
CNFG_1
RT_1
SYNC
U6
LM5148RGYR
CNFG_2
Vbus to 5V Power Supply
U3
AP63203WU
IN
SW
BST
FB
C6 100n
L1 3.9u
C5 10u
C9 22u
C10 22u
R7 56k2
R3 54k9
C18 100n
C22 100n
C23 100n
C24 100n
C25 100n
C26 4u7
C27 4u7
R9 56k2
R11 90k9
C19 100n
C28 100n
C29 100n
C30 100n
C31 100n
C32 4u7
C33 4u7
GNDA
PGND
Sheet: /
File: PD_esp32Cad.kicad_sch
Title:
Size: A4
Date:
Rev:
KiCad E.D.A. 9.0.2
Id: 1/1