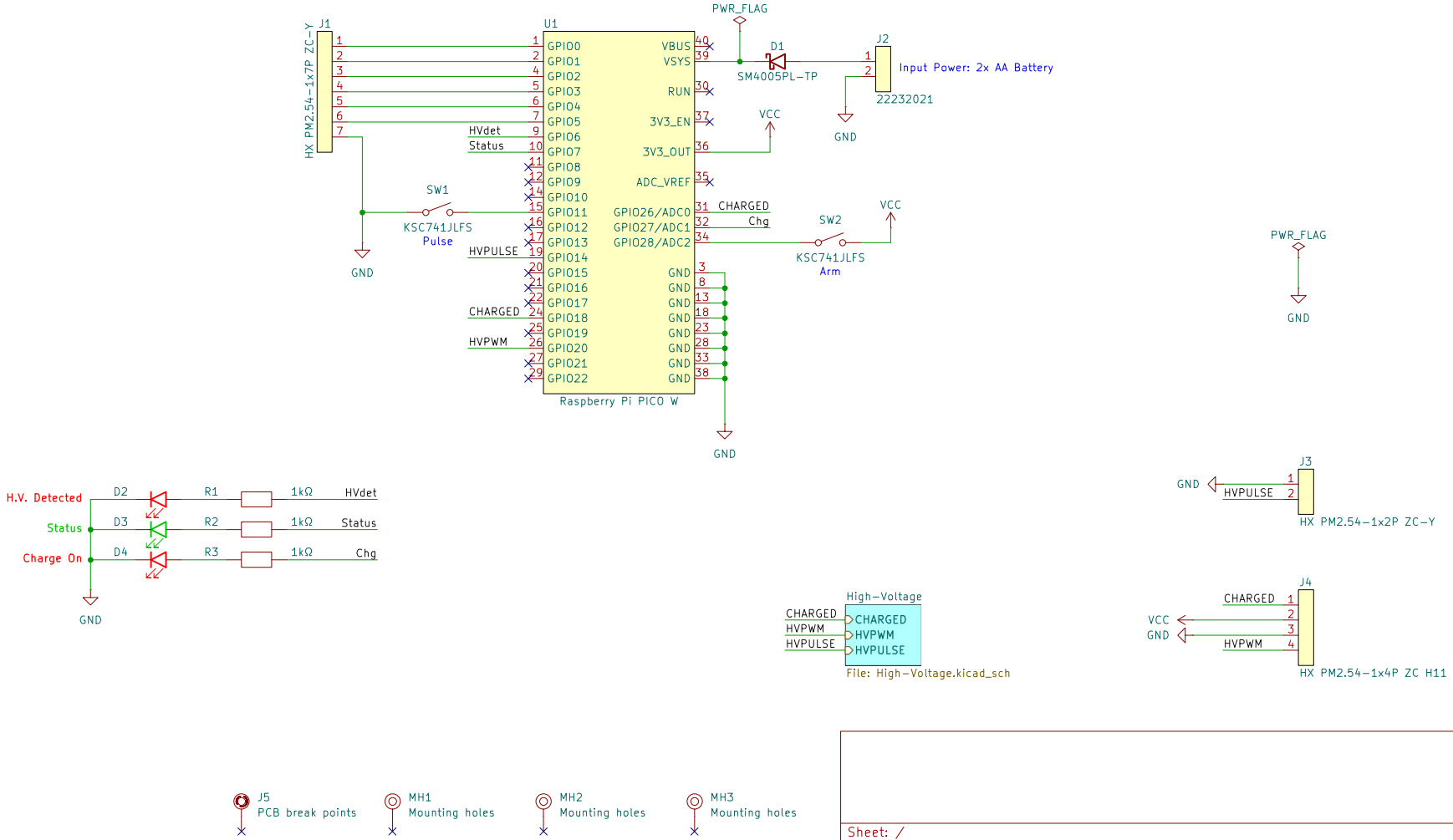

Sheet: /
File: chipshouter-pico.kicad_sch

Title: MCU

Size: A4	Date: 2026-07-28	Rev:
KiCad E.D.A. 10.0.0		Id: 1/2

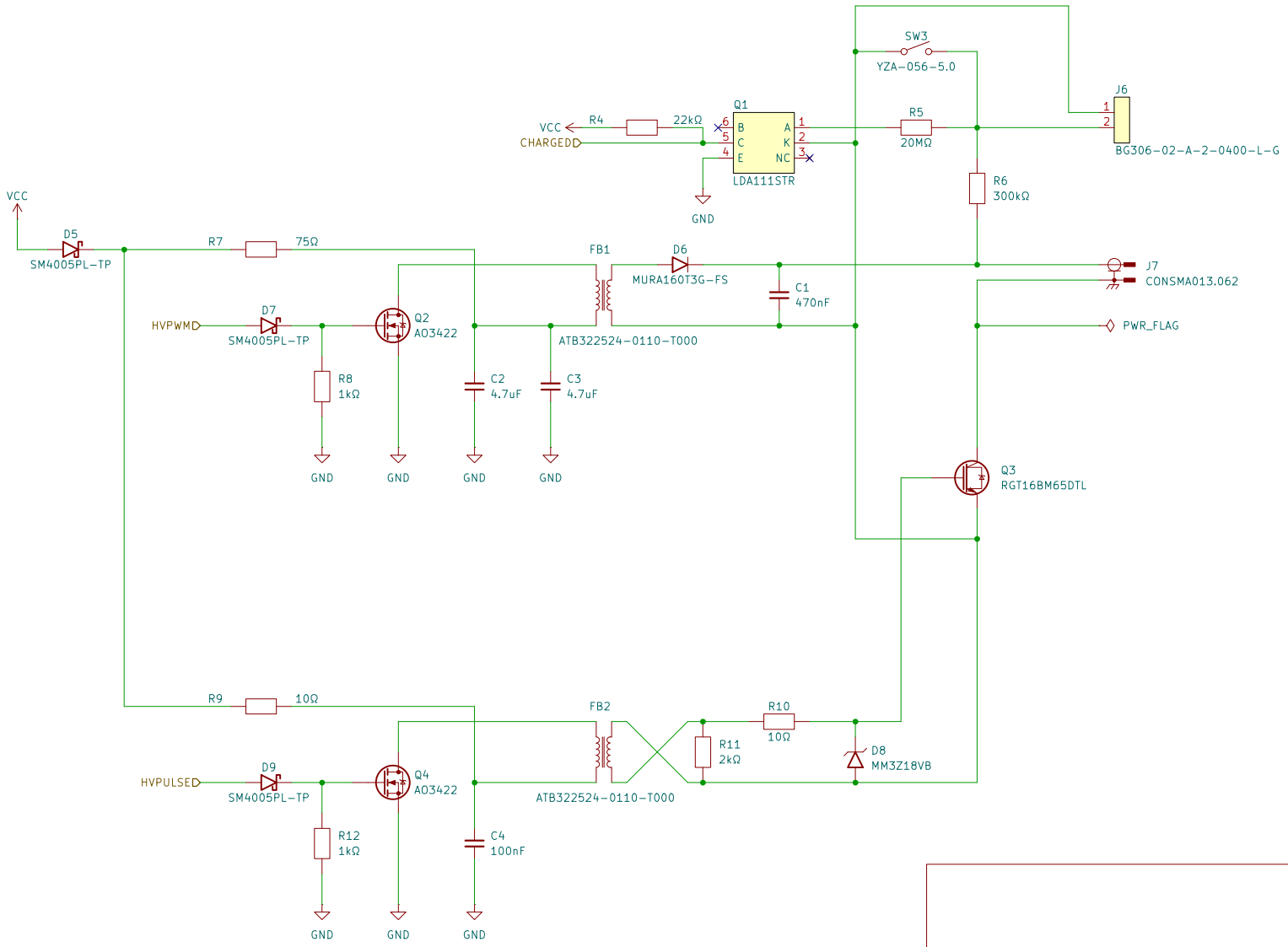

Sheet: /High-Voltage/
File: High-Voltage.kicad_sch

Title: High-Voltage

Size: A4	Date: 2026-07-28	Rev:
KiCad E.D.A. 10.0.0		Id: 2/2