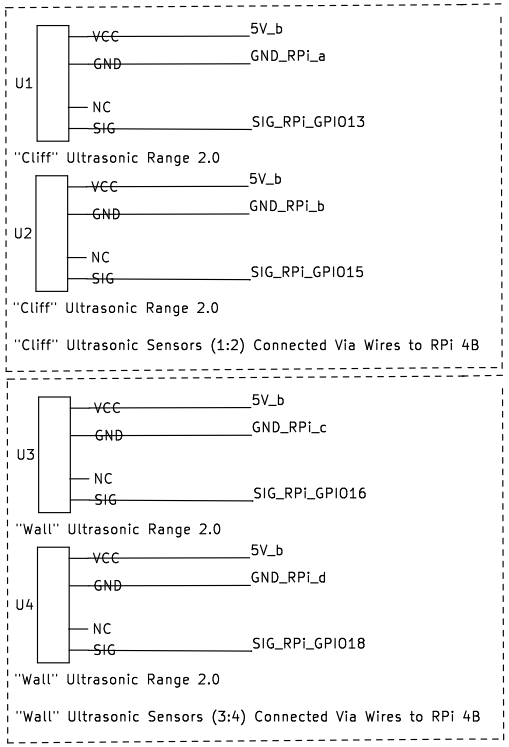
U1
VCC
GND
NC
SIG
5V_b
GND_RPi_a
SIG_RPi_GPIO13
"Cliff" Ultrasonic Range 2.0
U2
VCC
GND
NC
SIG
5V_b
GND_RPi_b
SIG_RPi_GPIO15
"Cliff" Ultrasonic Range 2.0
"Cliff" Ultrasonic Sensors (1:2) Connected Via Wires to RPi 4B
U3
VCC
GND
NC
SIG
5V_b
GND_RPi_c
SIG_RPi_GPIO16
"Wall" Ultrasonic Range 2.0
U4
VCC
GND
NC
SIG
5V_b
GND_RPi_d
SIG_RPi_GPIO18
"Wall" Ultrasonic Range 2.0
"Wall" Ultrasonic Sensors (3:4) Connected Via Wires to RPi 4B

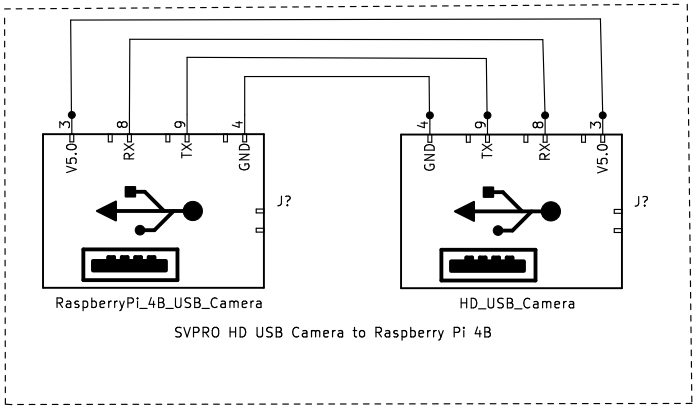
V5.0
RX
TX
GND
J?
RaspberryPi_4B_USB_Camera
HD_USB_Camera
SVPRO HD USB Camera to Raspberry Pi 4B

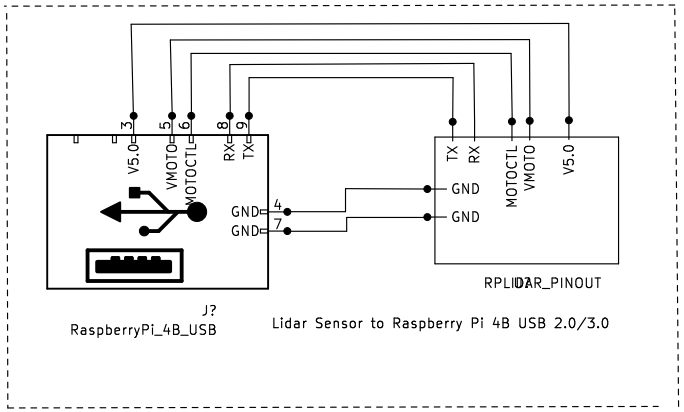
V5.0
VMOTO
MOTOCTL
RX
TX
GND
J?
RaspberryPi_4B_USB
TX
RX
MOTOCTL
VMOTO
V5.0
RPLIDAR_PINOUT
Lidar Sensor to Raspberry Pi 4B USB 2.0/3.0

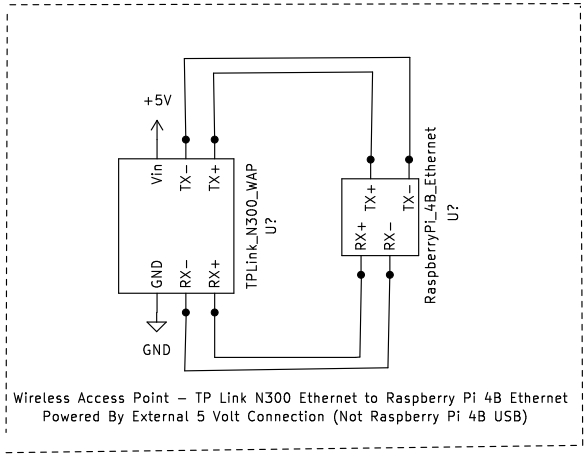
+5V
Vin
TX−
TX+
GND
RX−
RX+
TPLink_N300_WAP
U?
RX+
TX+
RX−
TX−
RaspberryPi_4B_Ethernet
U?
Wireless Access Point – TP Link N300 Ethernet to Raspberry Pi 4B Ethernet
Powered By External 5 Volt Connection (Not Raspberry Pi 4B USB)

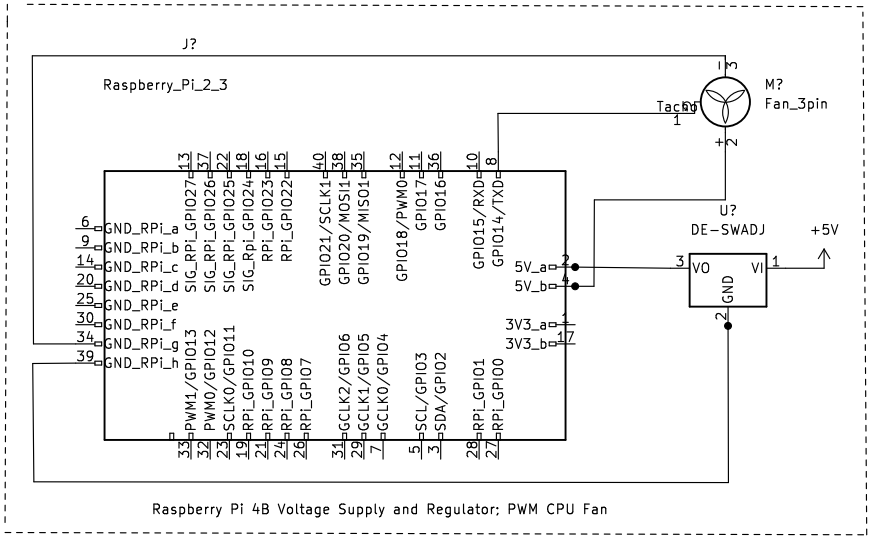
J?
Raspberry_Pi_2_3
M?
Fan_3pin
Tacho
GND_RPi_a
GND_RPi_b
GND_RPi_c
GND_RPi_d
GND_RPi_e
GND_RPi_f
GND_RPi_g
GND_RPi_h
SIG_RPi_GPIO27
SIG_RPi_GPIO26
SIG_RPi_GPIO25
SIG_Rpi_GPIO24
RPi_GPIO23
RPi_GPIO22
GPIO21/SCLK1
GPIO20/MOSI1
GPIO19/MISO1
GPIO18/PWM0
GPIO17
GPIO16
GPIO15/RXD
GPIO14/TXD
5V_a
5V_b
3V3_a
3V3_b
PWM1/GPIO13
PWM0/GPIO12
SCLK0/GPIO11
RPi_GPIO10
RPi_GPIO9
RPi_GPIO8
RPi_GPIO7
GCLK2/GPIO6
GCLK1/GPIO5
GCLK0/GPIO4
SCL/GPIO3
SDA/GPIO2
RPi_GPIO1
RPi_GPIO0
U?
DE-SWADJ
+5V
VO
VI
GND
Raspberry Pi 4B Voltage Supply and Regulator; PWM CPU Fan

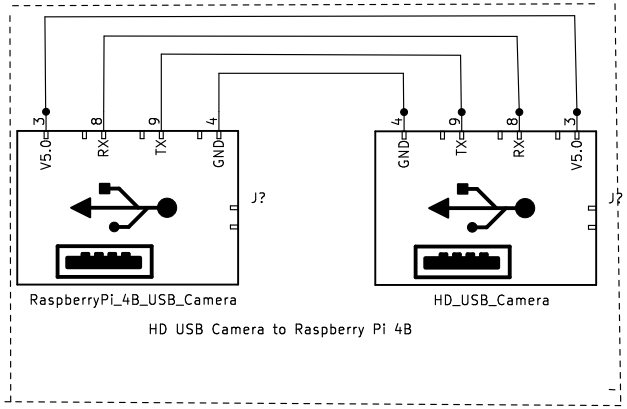
V5.0
RX
TX
GND
J?
RaspberryPi_4B_USB_Camera
HD_USB_Camera
HD USB Camera to Raspberry Pi 4B

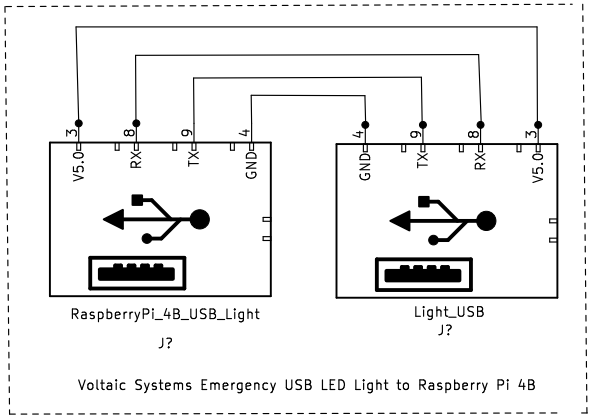
V5.0
RX
TX
GND
RaspberryPi_4B_USB_Light
J?
Light_USB
J?
Voltaic Systems Emergency USB LED Light to Raspberry Pi 4B