LINEAR INTEGRATED CIRCUITS PROJECT REPORT

On

"Motion-Activated Light using 555 Timer and PIR Sensor"

SUBMITTED BY:

HASHIM S N (Roll No:612)

JOSHUA FELIX (Roll No:614)

SIDDHARTH S KRISHNAN (Roll No:650)

VIBHU V (Roll No:663)

CLASS: T5B

ACKNOWLEDGEMENT

We would like to express our sincere gratitude to the team members for their invaluable contributions to this project. This project couldn't be complete without the combined efforts of each of the group members. We thank Ms. Sandhya L Ma'am for this opportunity and facilities provided for this project.

ABSTRACT

This project aims to design and implement a motion-activated light system using a 555 Timer IC and a Passive Infrared (PIR) sensor. The system detects human motion using the PIR sensor and activates a light for a specified period, making it an energy-efficient and automated lighting solution.
The PIR sensor detects infrared radiation emitted by moving objects in its vicinity. When motion is detected, the PIR sensor sends a signal to the 555 Timer, which is configured in monostable mode. The 555 Timer triggers the output for a predetermined duration, turning on an LED. After the delay, the system resets, and the light turns off until the next motion is detected. The duration for which the light remains on is adjustable by changing the resistor and capacitor values in the circuit.
This project has practical applications in home automation, security systems, and energy-efficient lighting. It is designed for simplicity and can be built on a breadboard, powered by a 9V battery, making it ideal for learning about sensor integration with basic ICs and control circuits.

CONTENTS

- **INTRODUCTION …… Page 5**
- **APPARATUS TABLE …….. Page 6**
- **COMPONENT DESCRIPTION ……. Page 7–12**
- **CIRCUIT DIAGRAM …….. Page 13**
- **WORKING ……..... Page 13-14**
- **ADVANTAGES ……. Page 14**
- **DISADVANTAGES …….. Page 15**
- **APPLICATIONS.…….. Page 15-16**
- **CONCLUSION ……. Page 16**

INTRODUCTION

Energy efficiency and security are key concerns in modern households and workplaces. A **Motion-Activated Light** system is an effective solution to address both, as it conserves energy by activating only when motion is detected and enhances safety by illuminating areas when someone is present. This project demonstrates the design and implementation of a **Motion-Activated Light** using a **555 Timer IC** and a **PIR (Passive Infrared) sensor**. The **PIR sensor** detects the infrared radiation emitted by moving objects, particularly humans, in its vicinity. Upon detecting motion, the PIR sensor sends a signal to a **BC547 transistor**, which acts as a switch to trigger the **555 Timer IC**. Configured in **monostable mode**, the 555 Timer outputs a pulse that turns on the connected light for a specified duration. This simple and cost-effective circuit is ideal for use in various applications such as automatic lighting in rooms, stairways, garages, and outdoor security lighting. This project combines practicality and simplicity, providing a convenient and energy-saving solution for automatic lighting control.

APPARATUS TABLE

SL. NO.	Name of components
1	TIMER 555 IC
2	PIR SENSOR(HC-SR501)
3	Resistors(10kΩ,47kΩ,220Ω,1kΩ)
4	Capacitors(100µF,0.01µF)
5	Light Emitting Diode
6	BC547 Transistor
7	9V Battery
8	9V Battery Connector
9	Breadboard
	Connecting Wires

COMPONENT DESCRIPTION

TIMER 555 IC

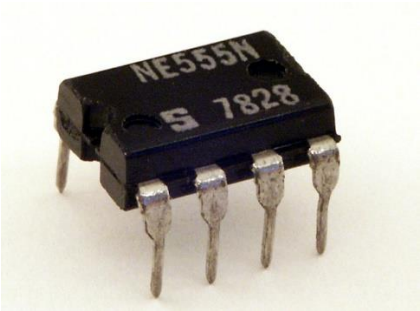

The **555 Timer IC** is a highly versatile integrated circuit used in various timing, delay, and pulse generation applications. In this project, it is configured in **monostable mode**, where it generates a single output pulse when triggered by the PIR sensor. The length of the pulse determines how long the light remains ON after motion is detected.

- **Operating Modes**: Monostable, Astable, and Bistable
- **Operating Voltage**: 4.5V to 15V
- **Output Current**: Up to 200mA
- **Monostable Mode**: Generates a timed pulse when triggered

PIR SENSOR(HC-SR501)

The PIR sensor detects infrared radiation emitted by warm objects, especially human bodies. It senses movement by detecting changes in infrared levels in its surroundings. When motion is detected, the PIR sensor outputs a HIGH signal (typically 3.3V or 5V) that is used to trigger the rest of the circuit. PIR sensors are widely used in security systems, automatic lighting, and motion-detecting devices.

- Operating Voltage: 3.3V to 5V
- Output: Digital (HIGH/LOW)
- Sensing Distance: Typically, 5 to 7 meters
- Field of View: Around 120 degrees

RESISTORS

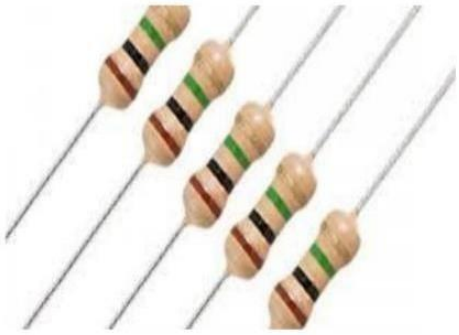

A resistor is a passive two-terminal electrical component that implements electrical resistance as a circuit element. In electronic circuits, resistors are used to reduce current flow, adjust signal levels, to divide voltages, bias active elements, and terminate transmission lines, among other uses. A resistor works by restricting the flow of current, it can do this in one of three ways: firstly, by using a less conductive material, secondly by making the conductive material thinner and finally by making the conductive material longer. A resistor is a passive two-terminal electrical component that implements electrical resistance as a circuit element. In electronic circuits, resistors are used to reduce current flow, adjust signal levels, to divide voltages, bias active elements, and terminate transmission lines, among other uses.

CAPACITORS

Capacitor is a device for storing electrical energy, consisting of two conductors in close proximity and insulated from each other. A simple example of such a storage device is the parallel-plate capacitor. A one-hundred nano-Farad capacitor is written as 100nF or just 100n. It may be marked as 0.1 (meaning 0.1uF which is 100nF). Or it may be marked with 104, meaning 10 and four zeros: 100000pF which is equal to 100nF

LIGHT EMITTING DIODE

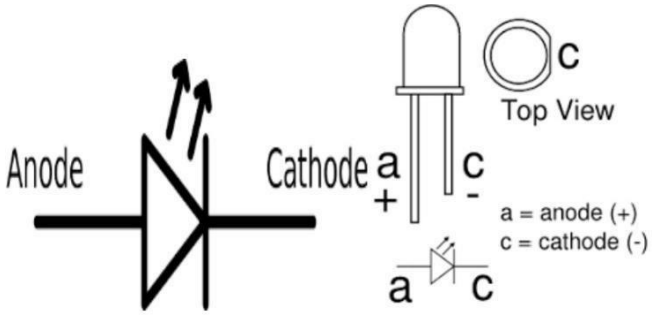

A light emitting diode (LED) is a semiconductor device that emits light when an electric current is passed through it. Light is produced when the particle that carry the current (known as electrons and holes) combine together within the semiconductor material. Since light is generated within the

solid semiconductor material, LEDs are described as solid-state devices. The term solid state lighting, which also distinguishes this lighting technology from other sources that use heated filaments (incandescent and tungsten) or gas discharge (fluorescent lamps).

BC547 TRANSISTOR

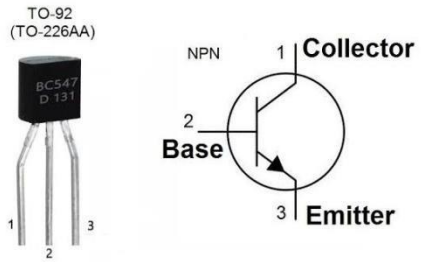

BC547 is usually used for current amplifier, quick switching and pulse-width modulation (PWM). Therefore, if you need to control the speed of a motor or actuator in some of your projects, you can simply use this transistor to achieve it. BC547 is a Bipolar Junction Transistor, abbreviated as BJT. It is an NPN transistor.

9V BATTERY AND CONNECTOR

The 9V battery is the power source for your Motion-Activated Light circuit. It provides the necessary voltage to operate all the components, including the PIR sensor, 555 Timer, and transistor, ensuring the system functions properly.

- Voltage: 9V
- Capacity: Typically between 400mAh to 600mAh, depending on the type and brand of the battery
- Type: Often a PP3 type battery, which is commonly used in small electronics projects

The 9V Battery Connector is used to connect the battery terminals to the circuit. It typically consists of a snap-on connector with two wires (one red for positive, one black for negative).
The connector is crucial for providing a solid connection between the battery and the rest of the components, ensuring no loose contacts.

BREADBOARD

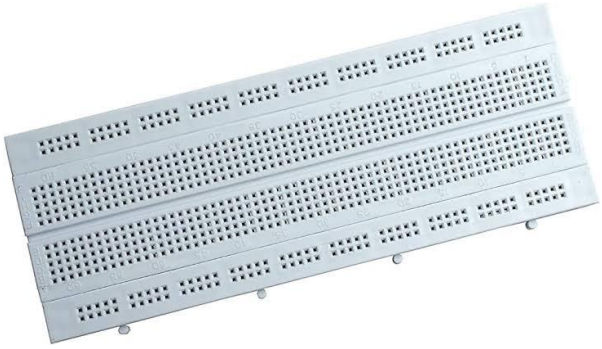

A **breadboard** is a **solderless** device used for building and testing electronic circuits without the need for permanent connections. It's an essential tool for electronics hobbyists, students, and engineers, allowing them to easily prototype, modify, and troubleshoot circuits before finalizing them.

- **Component Placement**: Components like **resistors, capacitors, transistors**, and **ICs** are placed into the holes. Each hole in a row is internally connected to the other holes in that row, allowing current to flow between components.
- **Power Distribution**: Power from a **battery** or **power supply** is connected to the **power rails**. These rails provide voltage (Vcc) and ground (GND) to components across the entire breadboard, making it easy to power the circuit.

- **Jumper Wires**: These are used to make connections between different components by plugging the wires into the appropriate holes.

CONNECTING WIRES

Connecting Wires. A wire is a flexible strand of metal, usually cylindrical in shape. Wires are used for establishing electrical conductivity between two devices of an electrical circuit. They possess negligible resistance to the passage of current.

CIRCUIT DIAGRAM

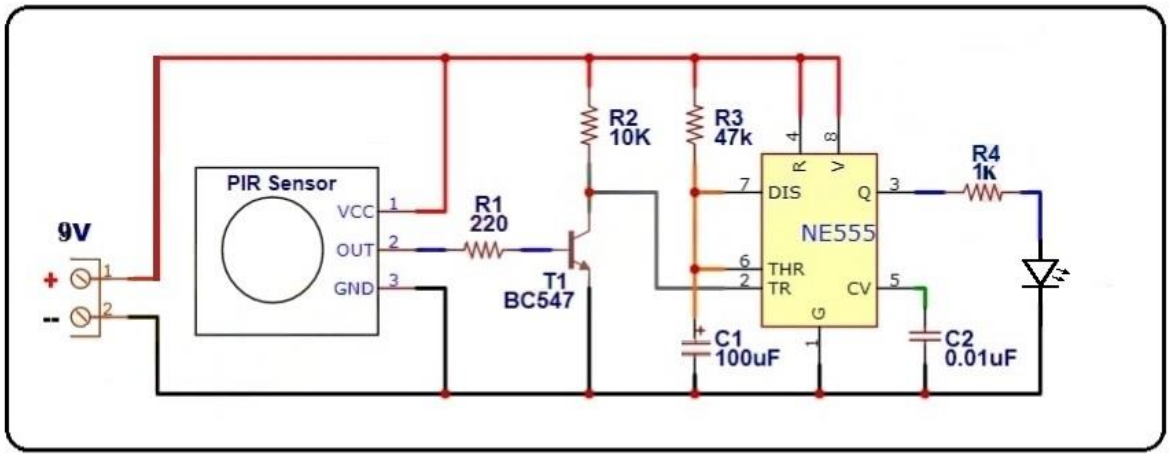

WORKING

1. **Powering the Circuit**:
   The circuit is powered by a **9V battery**. The battery provides the required voltage to all the components, including the PIR sensor, 555 Timer IC, and transistor. The **9V battery connector** is used to connect the battery's terminals to the breadboard, where the circuit is built.

2. **PIR Sensor Detects Motion**:
   The **PIR sensor** continuously monitors the surroundings for infrared radiation changes, which occur when a human or other warm-blooded creature moves within its detection range. When motion is detected, the PIR sensor's **output pin** goes HIGH (typically 3.3V or 5V), indicating the presence of motion.

3. **Signal Amplification by Transistor**:
   The HIGH output signal from the PIR sensor is fed to the base of the **BC547 transistor** through a **220Ω resistor**. The resistor limits the base current to prevent damage to the transistor. When the PIR sensor output is HIGH, it turns the transistor ON. This essentially connects the **trigger pin (Pin 2)** of the **555 Timer IC** to the ground.

4. **555 Timer in Monostable Mode**:
   The **555 Timer IC** is configured in **monostable mode**, meaning it generates a single output pulse when triggered.

- When the trigger pin (Pin 2) is momentarily pulled LOW (through the transistor), the 555 Timer generates a HIGH output pulse at **Pin 3** for a fixed amount of time.

- The duration of the output pulse is determined by the values of the **resistor** (usually a 1MΩ) and **capacitor** connected to the **timer's timing circuit**. This ensures the light stays ON for a certain period after motion is detected.

5. **Light Turns On**:
   The HIGH output from the 555 Timer at **Pin 3** is used to turn on the connected **LED** or **light bulb**. If using a high-power light, a **relay** could be added to control the light. The light remains ON for the duration set by the 555 Timer and then automatically turns OFF after the set time period.

6. **No Motion Detected**:
   When no motion is detected, the PIR sensor's output remains LOW, meaning no signal is sent to the transistor. The **BC547 transistor** remains OFF, and the 555 Timer does not receive a trigger signal. As a result, the light stays OFF until the next motion is detected.

ADVANTAGES

- **Energy Efficiency**:
  The light only turns on when motion is detected, saving energy by not being continuously lit. This is especially useful in areas where lighting is needed sporadically, such as hallways, outdoor areas, or rooms with infrequent use.
- **Automation**:
  The system is fully automatic. The PIR sensor detects motion, and the circuit turns the light on without the need for manual switching. It turns off automatically after a set time, ensuring convenience and energy conservation.
- **Cost-Effective**:
  The components used (PIR sensor, 555 Timer IC, BC547 transistor, resistors, and capacitors) are inexpensive and widely available, making this circuit a low-cost solution for motion-activated lighting.
- **Simple Design**:
  The circuit is easy to build and understand, making it an ideal project for beginners in electronics. The use of a breadboard for testing and prototyping also allows for easy modifications and debugging.
- **Versatile Applications**:
  This circuit can be used in a variety of settings, such as homes, offices, garages, and outdoor security lighting systems. It can also be adapted for other purposes, such as alarms or automatic door openers.

DISADVANTAGES

- **Limited Detection Range**:
  The **PIR sensor** has a limited range, typically around **5 to 10 meters**, and a specific field of view. This means it may not detect motion outside of this range, which could be problematic in larger spaces or outdoor areas.
- **False Triggers**:
  The PIR sensor may sometimes generate false alarms, triggering the light due to environmental factors like changes in temperature, sunlight, or movement of small animals. This can reduce the overall efficiency of the system.
- **Fixed Timing**:
  Although the timing for the light to remain ON can be adjusted by changing the resistor and capacitor values, this process requires manual adjustment of the circuit, which can be inconvenient. Unlike more advanced systems, this circuit doesn't offer an easy way to dynamically adjust the timing without modifying components.
- **Battery Drain**:
  If a **9V battery** is used to power the circuit, it may not last long, especially if the light is triggered frequently. This means the battery will need to be replaced or recharged periodically, making it less ideal for high-traffic areas.
- **No Light-Level Sensing**:
  This circuit lacks a **light-dependent resistor (LDR)** or any mechanism to detect ambient light levels. As a result, the light may turn on even during the daytime when it’s not needed, leading to unnecessary power consumption.

APPLICATIONS

1. **Home Security Systems:**
   This circuit can be used as part of a security system to detect motion around a house or property, automatically turning on lights when someone approaches. It can help deter intruders and alert homeowners to potential threats.

2. **Automatic Room Lighting:**
   The circuit can be installed in rooms such as bathrooms, storerooms, or closets, where lights are only needed when someone is present. This reduces the need for manual switches and conserves energy.

3. **Outdoor Lighting:**
   The system can be used for porch lights, driveways, walkways, and gardens, where it turns on lights when someone enters the area, improving visibility and safety at night.

4. **Garage or Basement Lights:**

This circuit is useful for areas like garages or basements, where people typically need light only when they enter. It ensures that lights automatically turn on and off, improving convenience and safety.

5. **Office Buildings:**
   In offices, the circuit can be used in areas with less frequent foot traffic, such as corridors, meeting rooms, or restrooms, where lights are needed only when people are present. This helps in reducing electricity bills.

6. **Energy-Efficient Lighting:**
   By automatically controlling the light based on motion detection, the system can be used to save energy in homes, offices, and public spaces where lights might otherwise be left on unnecessarily.

CONCLUSION

The **Motion-Activated Light Circuit using a 555 Timer and PIR Sensor** presents an effective and efficient solution for automatic lighting in various applications. This project combines widely available components into a simple yet functional design, providing a valuable tool for enhancing convenience, safety, and energy efficiency in homes, offices, and outdoor areas.

Through the use of the PIR sensor, the circuit detects motion and automatically activates a light, reducing the need for manual operation and minimizing energy consumption. The 555 Timer IC, configured in monostable mode, allows for customizable timing settings, ensuring that the light remains on for a specified duration after detecting movement.

While the project has several advantages, such as low cost, ease of assembly, and versatility, it is essential to acknowledge its limitations, including the potential for false triggers, limited detection range, and fixed timing settings. Nevertheless, these challenges can be mitigated with further enhancements or additional components, depending on the specific requirements of the application.

Overall, this project not only serves as an excellent introduction to basic electronics and circuit design but also demonstrates the practical application of automation in everyday life.

It encourages creativity and innovation, paving the way for more advanced systems in the future. With potential modifications and improvements, this motion-activated light system can be integrated into smart home environments, providing an even greater level of functionality and convenience.

THANK YOU!