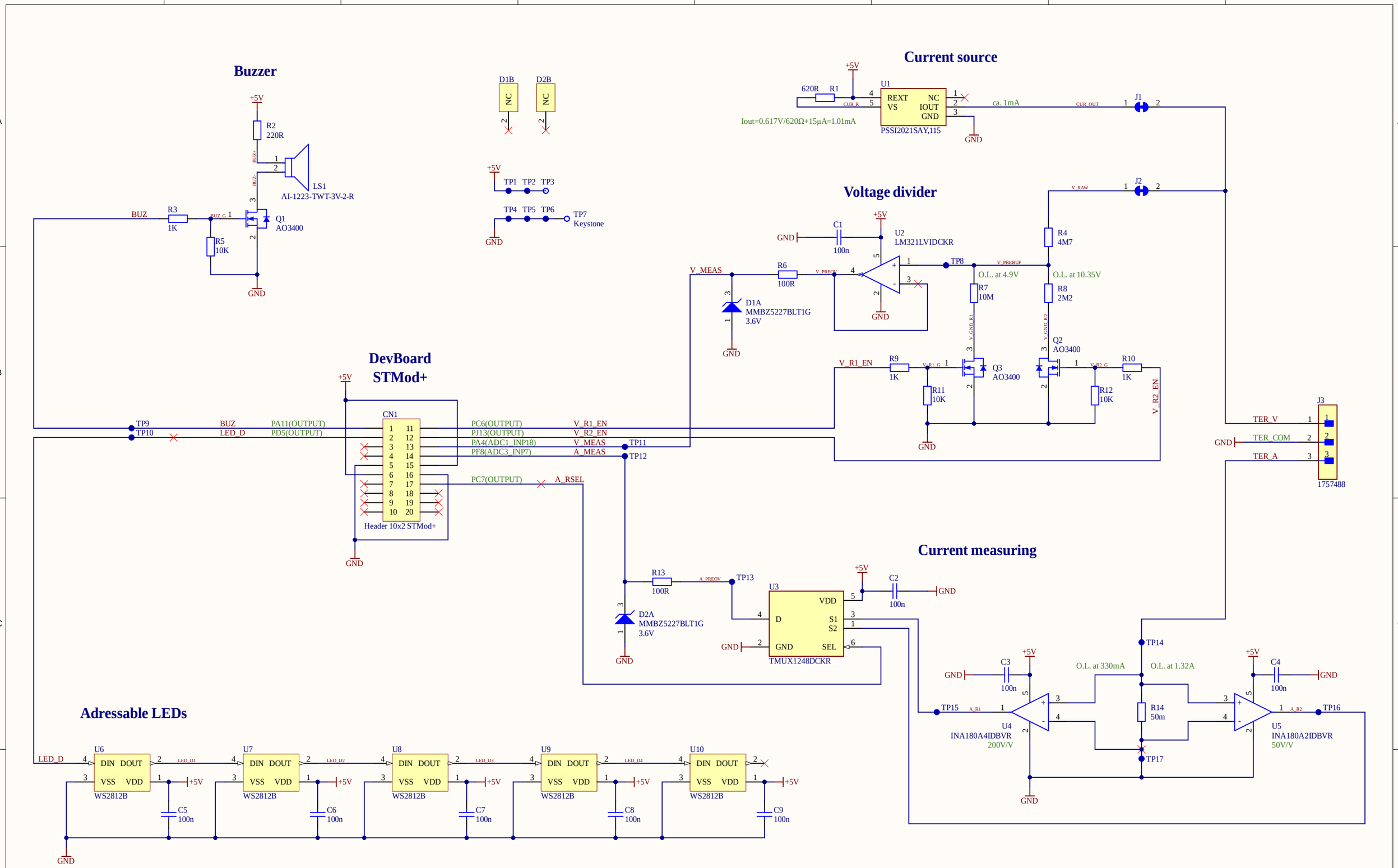

ETH Eidgenössische Technische Hochschule Zürich Swiss Federal Institute of Technology Zurich			Project: Extension PCB CircuitVoyager pre1
Drawing number: 1 Rev: 0.0	Format: A3	Laboratory: SED / TBZ	Sheet: Main.SchDoc
Date: 26.10.2023 21:25:20		Drawn by: Joel Schaller	Page 1 of 1
File: D:\OneDrive\Beruflich\TBZ\Projects\CircuitVoyager_pre1\5_Hardware\PCB_EXTENSION_CircuitVoyager_pre1\Main.SchDoc			