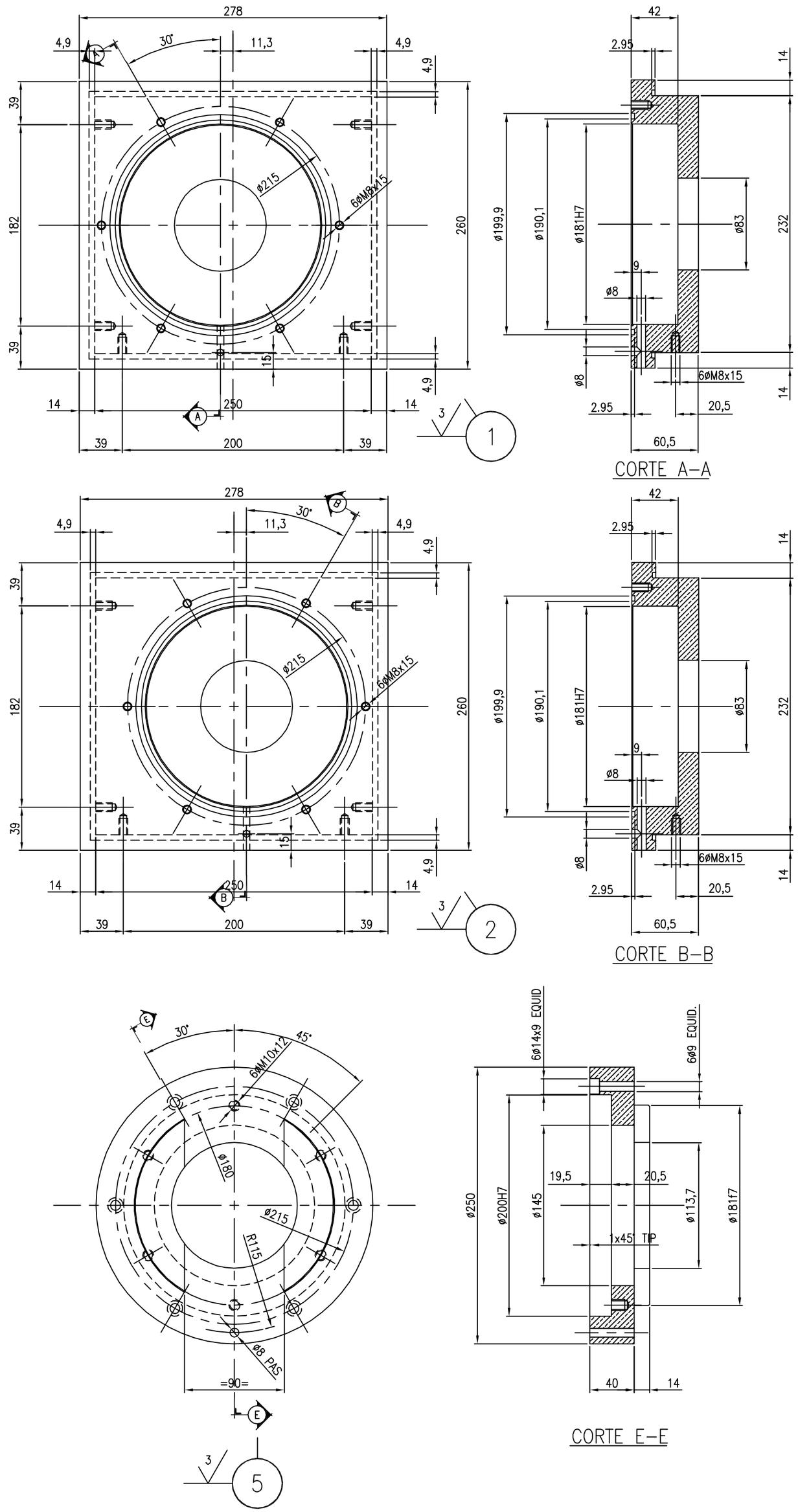

MACHINED PARTS REQUIREMENTS							
PERMISSIBLE TOLERANCE FOR DIMENSION NOT SPECIFIED							
LENGTH	FROM	—	6	30	120	400	1000	2000
	UP TO	6	30	120	400	1000	2000	4000
		±0.1	±0.2	±0.3	±0.5	±0.8	±1.2	±2.0
ANGLE	LENGTH OF ∢ SHORTEST SIDE (mm)						
	FROM	—	10	50	120	400	
	UP TO	10	50	120	400	—	
		±1°	±30′	±20′	±10′	±5′	
ROUGHNESS (Ra)(ϵm)		▽	▽▽	▽▽▽	▽▽▽▽		
		12.5	3.2	0.8	0.1		
REMOVE SHARP EDGES							

SUPPL. POS.	TAMSA POS.	DESCRIPTION	QTY	MATERIAL	WEIGHT	OBSERVATIONS
	7	ANILLO PRENSA EMPAQUE		NYLAMIY "M"		
	6	TAPA INFERIOR		NYLAMID "M"		
	5	TAPA PRENSA ANILLO		NYLAMID "M"		
	4	TAPA LATERAL CORTA		NYLAMID "M"		
	3	TAPA LATERAL LARGA		NYLAMID "M"		
	2	TAPA POSTERIOR		NYLAMID "M"		
	1	TAPA FRONTAL		NYLAMID "M"		

NOTES:

PRELIMINAR

REFERENCE:

ONLY FOR FILE USE

32037–A

REV	DESCRIPTION	CeCo Client	OFFICE	NRP N°	DRAWN	CHECKED	APPRO	VoBo	DATE
0	EMITIDO	10105181319	IMAN					CVV	22/09/17

TenarisTamsa

PLANT N° 0 — 32037–A–D2–015

Date	22/09/17
Drawn	IDP/MAR
Designer	J.RENDON
Check	IDP/GCI
Approved	AEH
By Plant Check	AEH
By Plant Approved	AAM

PLANT or GROUP: FESF

UT–3

TRANSDUCTORES

PROBADOR DETALLES

LINE or USER: TERMINACION

"Confidential property of TENARIS S.A. and subsidiary companies. Copy, use or disclosure of this document or any data contained herein for any purpose to third parties without the express written consent of TENARIS S.A. and subsidiary companies is prohibited. Copyrighted 2009 as an unpublished work. ALL RIGHTS RESERVED."

SCALE 1–2,5 | DIMENSION MM | UNITS STANDARD SYSTEM

Tenaris Engineering N°

Replace to/for

SIZE A1

Your complimentary use period has ended. Thank you for using PDF Complete.
Click Here to upgrade to Unlimited Pages and Expanded Features