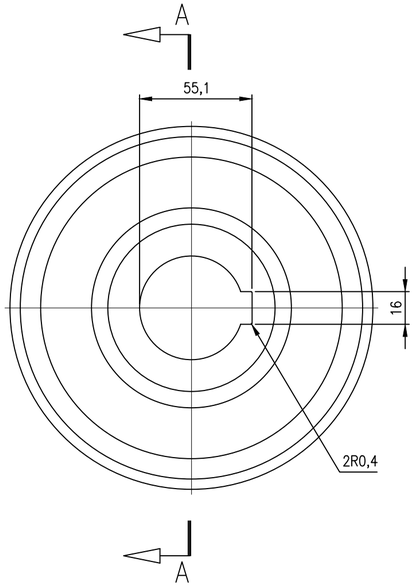

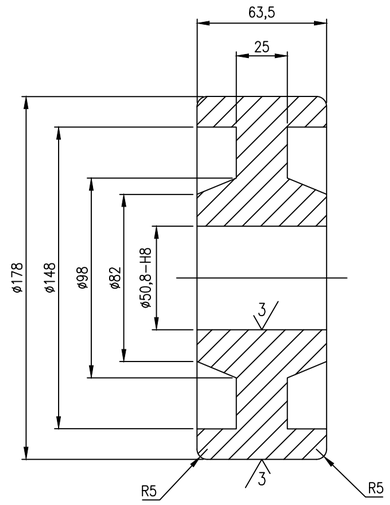

SECTION "A–A"

SC. 1:2

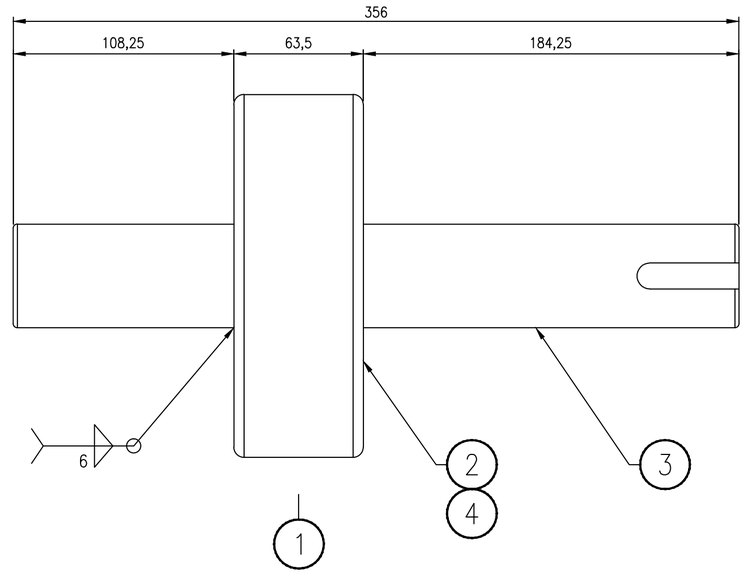

2 12/ (3/) LUNETA
MATERIAL: SAE 1045

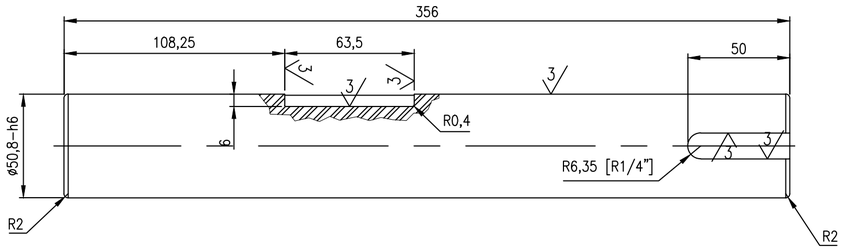

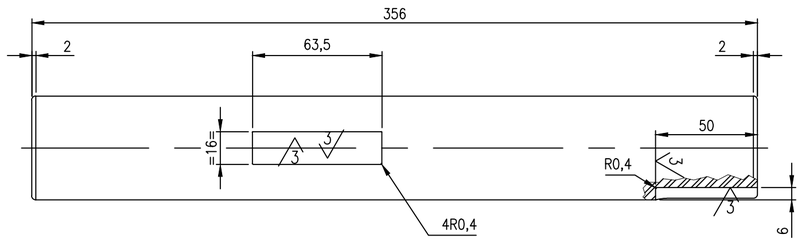

3 12/ (3/) FLECHA
MATERIAL: SAE 1045

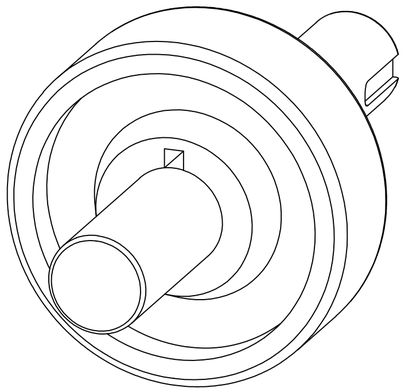

VISTA ISOMETRICA

NOTES:

1– ACOTACIONES EN MILIMITROS.
2– ELIMINAR FILOS EXISTENTES.

	4	CUÑA 16mmX10mmX6mm	1	INDICADO	0.1	NORMA UNI 6604
	3	FLECHA ø50.8mm	1	INDICADO	5.5	
	2	LUNETA øExt.178mm	1	INDICADO	8	
	1	CONJUNTO	1	INDICADO	13.6	
SUPPL. POS.	TAMSA POS.	DESCRIPTION	QTY	MATERIAL	WEIGHT	OBSERVATIONS

ONLY FOR FILE USE

7135D–001

REV	DESCRIPTION	CeCo Client	OFFICE	NRP N°	DRAWN	CHECKED	APPRO	VoBo	DATE
0	EMITIDO	13662906	MAEN		MLD	JRS	AAM	CW	29/09/17

TenarisTamsa

PLANT N° 0
7135D–001–D2–001

Date	29/09/17
Drawn	MLD
Designer	
Check	JRS
Approved	AAM
By Plant Check	AAM
By Plant Approved	AAM

PLANT or GROUP COFI

LINE or USER UT3

MAQUINA DE ULTRASONIDO

LUNETA MOTRIZ

DETALLES

Confidential property of TENARIS S.A. and subsidiary companies. Copy, use or disclosure of this document or any data contained herein for any purpose to third parties without the express written consent of TENARIS S.A. and subsidiary companies is prohibited. Copyrighted 2009 as an unpublished work. ALL RIGHTS RESERVED.

SCALE: 1:2

DIMENSION: mm

UNLESS OTHERWISE STATED

Tenaris Engineering N°

Replace to/for

SIZE A2

SIZE A2
4420-694