2/2 or 3/2 way Rocker-Solenoid Valve with separating diaphragm

- With isolating diaphragm
- Compact design with 16 mm width and Cv ratings up to 0.058
- Flexible design for custom manifold assemblies
- High back pressure tightness, excellent cleanability and 100 % duty cycle
- Normally closed, normally open and universal function

Product variants described in the data sheet may differ from the product presentation and description.

Can be combined with

Type 2516
Cable plug,
form C according to
DIN EN 175301-803

Type 2505
10 mm socket for
Bürkert small solenoid
valves

Type description

The direct-acting rocker solenoid valve, Type 6126, is suitable for general applications in which compressed air, gases or slightly contaminated liquids are to be switched. The medium is in contact exclusively with the housing material and the FKM seals. The heat input in the medium is minimal, because the housing is separated from the coil by a stainless steel plate. The valves can be mounted directly or also single or manifold mounted. They are used for dosing, filling, mixing and distributing small quantities of medium.

DTS 1000138746 EN Version: F Status: RL (released | freigegeben | validé) printed: 27.01.2023

© Christian Bürkert GmbH & Co. KG, Subject to alteration

Visit product website

Table of contents

1. General technical data 3

1.1. General data 3
1.2. Medium pressure 4
1.3. Medium temperature....4
1.4. Internal volume 4

2. Circuit functions 5

3. Materials 5

3.1. Chemical Resistance Chart – Bürkert resistApp....5
3.2. Material specifications 5

4. Dimensions 6

4.1. Sub-base version with rectangular plug Type 2505 6
4.2. Sub-base version with cable plug on top Type 2516 6
4.3. Sub-base version with cable plug lateral Type 2516 7
4.4. Sub-base version with flying leads 7
Bürkert sub-base interface 3-way standard 8
Bürkert sub-base interface 2-way standard 8
Bürkert sub-base interface 2-way (low dead volume) 8

5. Ordering information 9

5.1. Bürkert eShop – Easy ordering and quick delivery....9
5.2. Bürkert product filter....9
5.3. Ordering chart....9
5.4. Ordering chart accessories....10
Rectangular cable plug Type 2505 10
Cable plug Type 2516, form C according to DIN EN 175301 - 803....10
Multiple manifolds for Bürkert sub-base interface 2-way....11
Multiple manifolds for Bürkert sub-base interface 3-way....12
Single manifolds for Bürkert sub-base interface 3-way 13

DTS 1000138746 EN Version: F Status: RL (released | freigegeben | validé) printed: 27.01.2023

1. General technical data

1.1. General data

Product properties	
Dimensions	Detailed information can be found in chapter “4. Dimensions” on page 6.
Materials	
Seal	FKM, EPDM
Fluid housing	PPS
Internal volume	Sub-base: starting at 44 µl < 10 µl available on request Detailed information can be found in chapter “1.4. Internal volume” on page 4.
Orifice	DN 0.8…DN 1.6
Circuit function	Detailed information can be found in chapter “2. Circuit functions” on page 5.
Performance data	
Switching time[1.)]	Open: ca. 25 ms (Pressure rise 0…10 %) Closing: ca. 25 ms (Pressure drop 100…90 %)
Electrical data	
Operating voltage	12/24 V DC, (other voltages on request)
Duty cycle	100 % continuous rating Manifold mounting: If media or ambient temperatures are above + 40 °C: intermittent operation 40 % (minimum 10 min)
Nominal power	3.4 W
Voltage tolerance	± 10 %
Medium data	
Operating medium	Resistant to neutral and aggressive liquids and gases (see chapter “3.1. Chemical Resistance Chart – Bürkert resistApp” on page 5)
Medium temperature (max.)	- 10…55 °C Detailed information can be found in chapter “1.3. Medium temperature” on page 4.
Viscosity (max.)	21 mm^2/s
Process/Port connection & communication	
Electrical connection[2.)]	Tag connectors according to DIN EN 175301- 803 form C for cable plug **Type 2516** ▸ top/lateral Two FEP-leads 0.2 mm^2 (AWG24), length 500 mm Rectangular cable plug **Type 2505** ▸
Port connection	Bürkert sub-base (16 × 27 mm)
Approvals and certificates	
Protection class	IP65 with flying leads or cable plug **Type 2516** ▸ IP30 with Rectangular plug **Type 2505** ▸
Environment and installation	
Installation	As required, preferably with actuator upright
Ambient temperature (max.)	55 °C

1.) Measurement at 2 bar and + 20 °C at the valve outlet acc. to DIN ISO 12238:2001

2.) Other electric connectors and other cable lengths upon request.

DTS 1000138746 EN Version: F Status: RL (released | freigegeben | validé) printed: 27.01.2023

1.2. Medium pressure

Note:

- Pressure data: Overpressure to atmospheric pressure
- Different pressure ranges available on request
- For low dead volume versions, the back pressure is limited to a maximum of 1 bar.

Circuit functions	Orifice [mm]	Port connection	Max. differential pressure [bar]
A, solenoid valve 2/2 way Direct-acting Normally closed 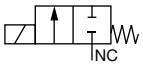	0.8	Sub-base	0…6
	1.2	Sub-base	0…5
	1.6	Sub-base	0…3
B, solenoid valve 2/2 way Direct-acting Normally opened 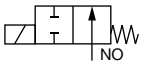	0.8	Sub-base	0…6
	1.2	Sub-base	0…5
	1.6	Sub-base	0…3
T, solenoid valve 3/2 way Direct-acting Flow direction optional Universal 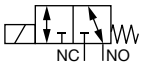	0.8	Sub-base	0…6
	1.2	Sub-base	0…5
	1.6	Sub-base	0…3

1.3. Medium temperature

Note:
The permissible medium temperature depends on the seal material and orifice.

Description	Orifice	Seal material	Temperature range
Media temperature	DN0.8	FKM	0…+50 °C
	DN0.8	EPDM	-5…+50 °C
	DN1.2 and 1.6	FKM	+5…+50 °C
	DN1.2 and 1.6	EPDM	0…+50 °C
Media temperature with limitation on switching time and life expectancy	DN0.8	FKM	-5…+55 °C
	DN0.8	EPDM	-10…+50 °C
	DN1.2 and 1.6[1.)]	FKM	0…+55 °C
	DN1.2 and 1.6	EPDM	-5…+50 °C

1.) Up to - 15 °C available on request

1.4. Internal volume

Note:
The internal volume is depending on fluid housing.

Body	2-way (low dead volume)		2-way		3-way	
	Fluid chamber	Total	Fluid chamber	Total	Fluid chamber	Total
Sub-base	44 µl	54 µl	97 µl	106 µl	90 µl	106 µl

DTS 1000138746 EN Version: F Status: RL (released | freigegeben | validé) printed: 27.01.2023

2. Circuit functions

Circuit functions	Description
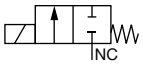	**Type: A, solenoid valve** 2/2 way Direct-acting Normally closed
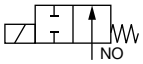	**Type: B, solenoid valve** 2/2 way Direct-acting Normally opened
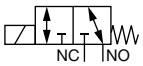	**Type: T, solenoid valve** 3/2 way Direct-acting Flow direction optional Universal

3. Materials

3.1. Chemical Resistance Chart – Bürkert resistApp

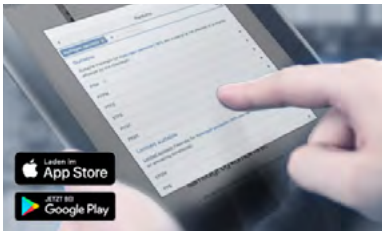

Bürkert resistApp – Chemical Resistance Chart

You want to ensure the reliability and durability of the materials in your individual application case? Verify your combination of media and materials on our website or in our resistApp.

Start Chemical Resistance Check

3.2. Material specifications

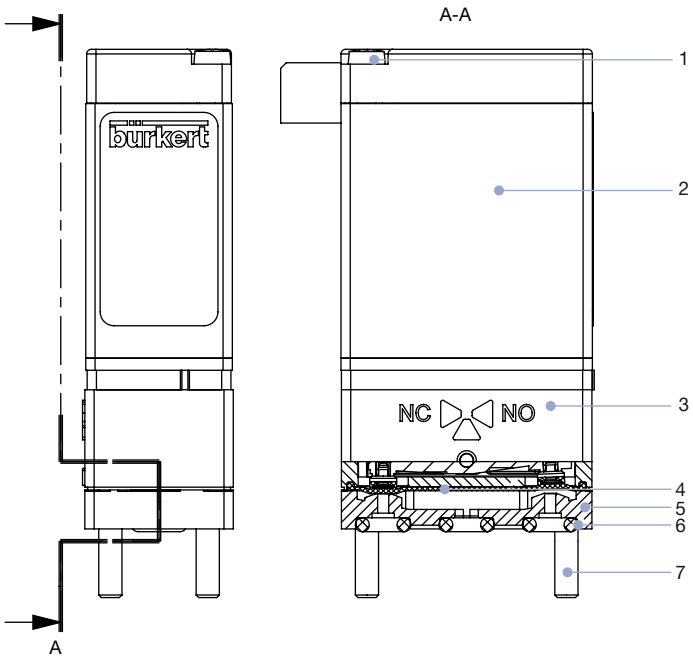

No.	Element	Material
1	Rounded head screw M2	Stainless steel
2	Coil	Epoxy
3	Actuator housing	PPS
4	Diaphragm (medium contact)	FKM, EPDM
5	Fluid housing (medium contact)	PPS
6	Flange seal (medium contact)	FKM, EPDM
7	Rounded head screw M2.5	Stainless steel

DTS 1000138746 EN Version: F Status: RL (released | freigegeben | validé) printed: 27.01.2023

4. Dimensions

4.1. Sub-base version with rectangular plug Type 2505

Note:

- Dimensions in mm
- Other screw length on request
- Self-tapping screws on request

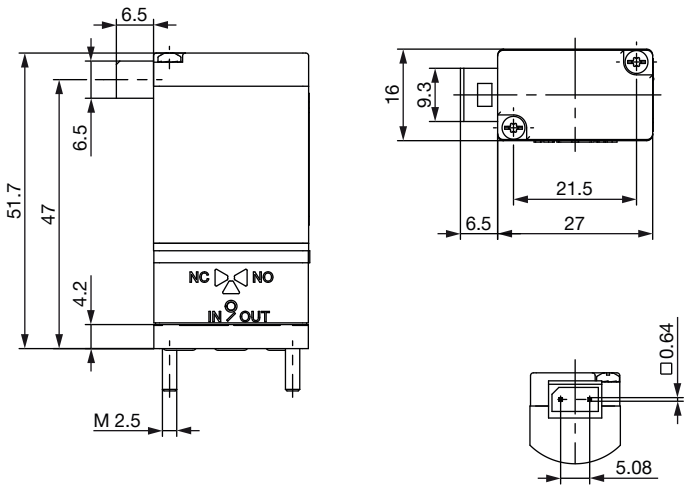

4.2. Sub-base version with cable plug on top Type 2516

Note:

- Dimensions in mm
- Other screw length on request
- Self-tapping screws on request

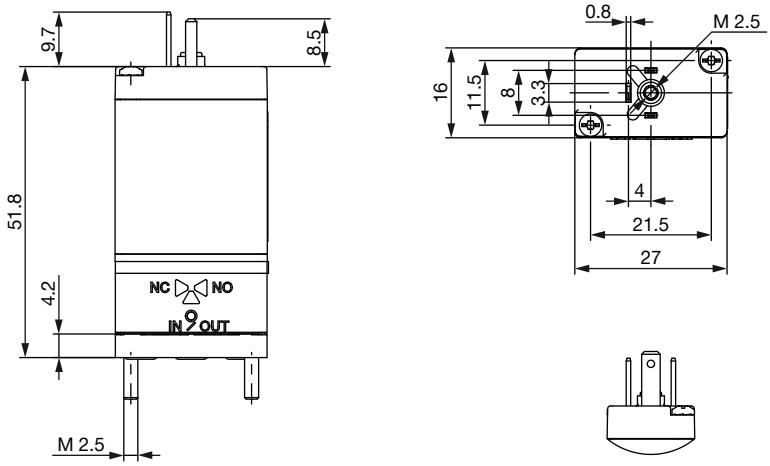

DTS 1000138746 EN Version: F Status: RL (released | freigegeben | validé) printed: 27.01.2023

4.3. Sub-base version with cable plug lateral Type 2516

Note:

- Dimensions in mm
- Other screw length on request
- Self-tapping screws on request

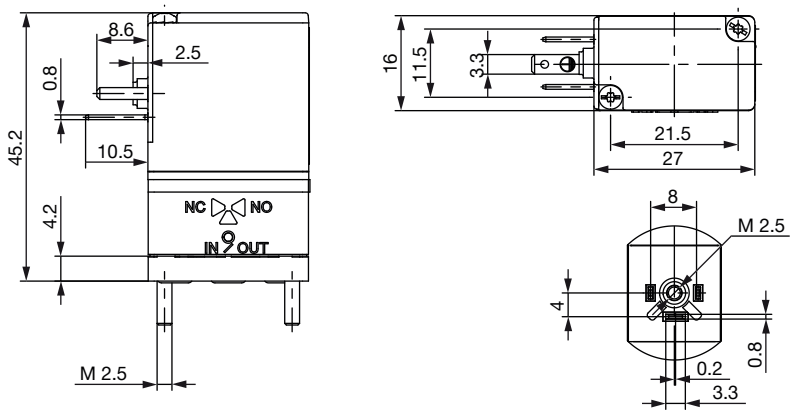

4.4. Sub-base version with flying leads

Note:

- Dimensions in mm
- Other screw length on request
- Self-tapping screws on request

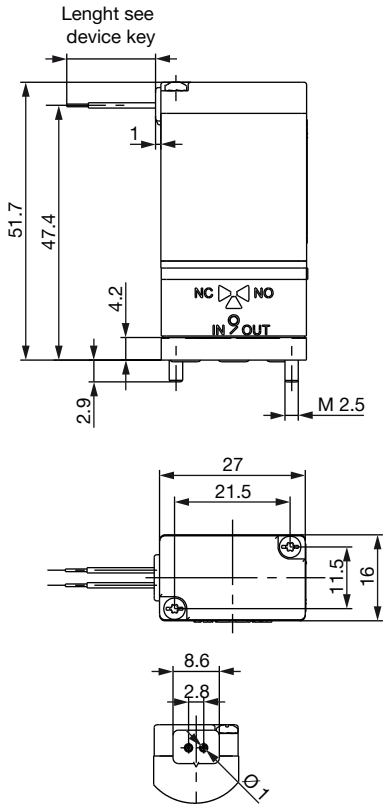

Classification of fluid connections
WWA (circuit function: Type A) 2/2 way Direct-acting Normally closed
WWB (circuit function: Type B) 2/2 way Direct-acting Normally opened
WWT (circuit function: Type T) Direct-acting Flow direction optional Universal
See chapter “2. Circuit functions” on page 5

DTS 1000138746 EN Version: F Status: RL (released | freigegeben | validé) printed: 27.01.2023

Bürkert sub-base interface 3-way standard

Note:
Dimensions in mm

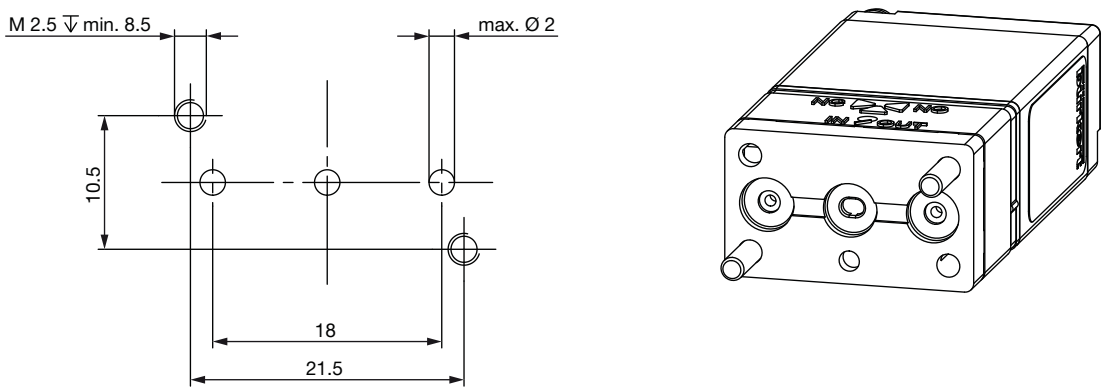

Bürkert sub-base interface 2-way standard

Note:
Dimensions in mm

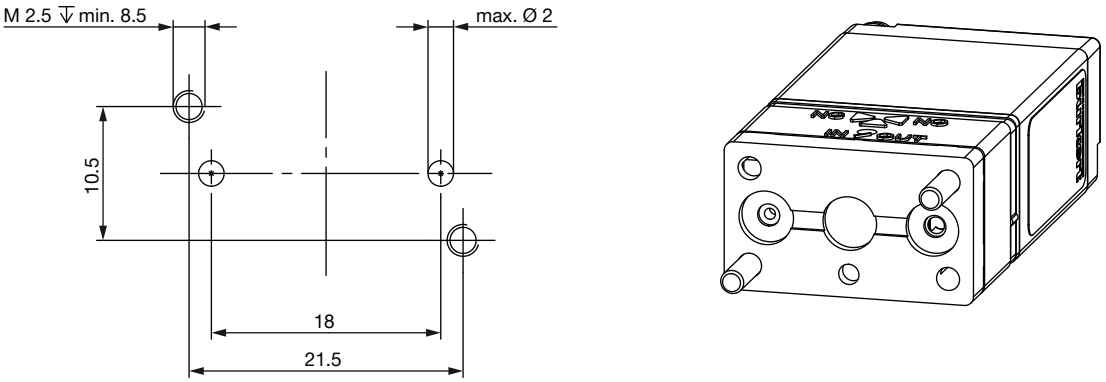

Bürkert sub-base interface 2-way (low dead volume)

Note:

- Dimensions in mm
- Available on request

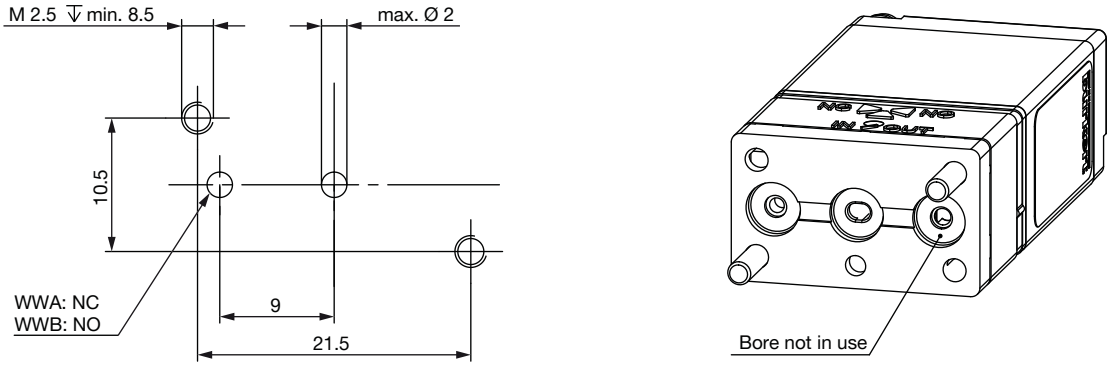

DTS 1000138746 EN Version: F Status: RL (released | freigegeben | validé) printed: 27.01.2023

5. Ordering information

5.1. Bürkert eShop – Easy ordering and quick delivery

Bürkert eShop – Easy ordering and quick delivery

You want to find your desired Bürkert product or spare part quickly and order directly? Our online shop is available for you 24/7. Sign up and enjoy all the benefits.

Order online now

5.2. Bürkert product filter

Bürkert product filter – Get quickly to the right product

You want to select products comfortably based on your technical requirements? Use the Bürkert product filter and find suitable articles for your application quickly and easily.

Try out our product filter

5.3. Ordering chart

Note:

- Pressure data: Overpressure to atmospheric pressure
- Different pressure ranges available on request
- 2 x M2.5 fixing screws for sub-base versions are included in the delivery.
- Connectors for rectangular plugs and cable plugs are not included in the delivery and must be ordered separately, see "5.4. Ordering chart accessories" on page 10.

Circuit function	Port connection	Orifice	Q_{Nn} value air	K_v value water	C_v value	Voltage/ Frequency	Pressure range	Body material	Seal material	Electrical connection	Article no.
		[mm]	[l/min]	[m³/h]	[gal/min]	[V/Hz]	[bar]				
A, solenoid valve 2/2 way Direct-acting Normally closed 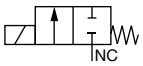 	Sub-base	0.8	16	0.015	0.017	12/DC	0…6	PPS	FKM	Tag connector to side	139151
						24/DC					139088
						24/DC				Rectangular plug	139236
						12/DC			EPDM	Tag connector to side	139154
						24/DC					139155
T, solenoid valve 3/2 way Direct-acting Flow direction optional Universal 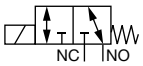 	Sub-base	0.8	16	0.015	0.017	12/DC	0…6	PPS	FKM	Tag connector to side	139158
						24/DC					139159
						24/DC				Rectangular plug	139237
						12/DC			EPDM	Tag connector to side	139162
						24/DC					139163

DTS 1000138746 EN Version: F Status: RL (released | freigegeben | validé) printed: 27.01.2023

5.4. Ordering chart accessories

Rectangular cable plug Type 2505

Note:
For further versions see data sheet **Type 2505** ▶.

Accessories	Description	Article no.
	Rectangular cable plug Type 2505 with 3 m cable	252572
	Rectangular cable plug Type 2505 with 5 m cable	255194
	Rectangular cable plug Type 2505 with 300 mm flying leads	644068
	Rectangular cable plug Type 2505 with 600 mm flying leads	162144

Cable plug Type 2516, form C according to DIN EN 175301 - 803

Note:
- Delivery of cable plug includes a flat seal and a fixing screw.
- For further versions see data sheet **Type 2516** ▶.

Cable plug	Dimensions	Version	Voltage	Article no.
	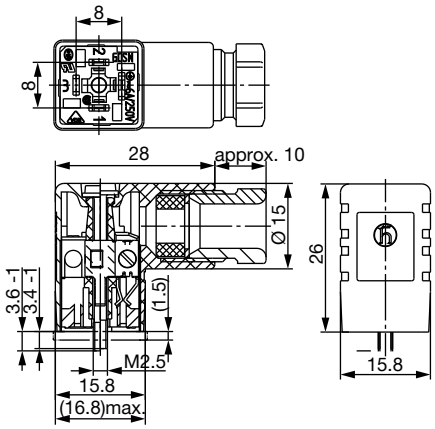	Without circuitry	0…250 V AC/DC	303141
		With LED	12…24 V AC/DC	303145
		With LED and varistor	12…24 V AC/DC	303148

DTS 1000138746 EN Version: F Status: RL (released | freigegeben | validé) printed: 27.01.2023

Multiple manifolds for Bürkert sub-base interface 2-way

Note:

- Dimensions in mm
- Port connection G ⅛"
- Material PPS
- Consider the screw protrusion!
- Further versions on request

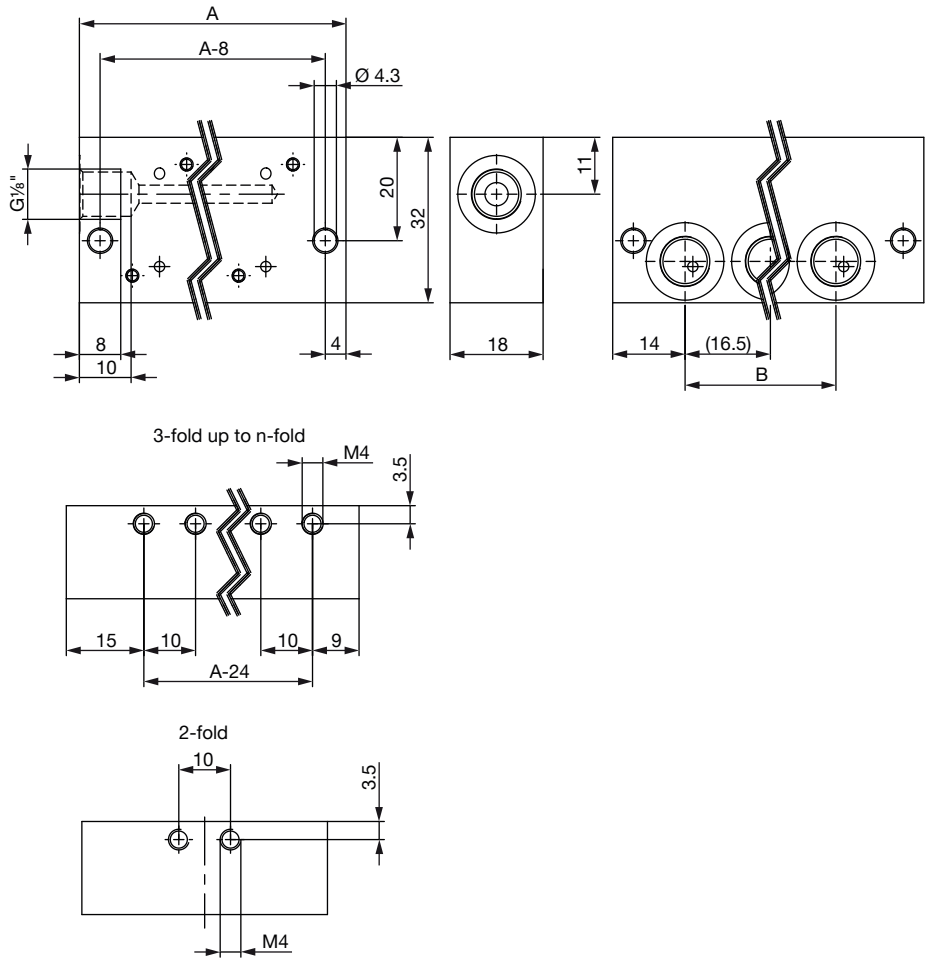

Manifold	A	B	n	Article no.
2-fold	47.5	16.5	2	675628
3-fold	64	33	3	675629
4-fold	80.5	49.5	4	675630
5-fold	97	66	5	675631
6-fold	113.5	82.5	6	675632
7-fold	130	99	7	675633
8-fold	146.5	115.5	8	675634
9-fold	163	132	9	675635
10-fold	179.5	148.5	10	675636

DTS 1000138746 EN Version: F Status: RL (released | freigegeben | validé) printed: 27.01.2023

Multiple manifolds for Bürkert sub-base interface 3-way

Note:

- Dimensions in mm
- Port connection 1: G ⅛"
- Port connection 2: M5
- Material aluminium (black anodized)
- Consider the screw protrusion!
- Further versions on request

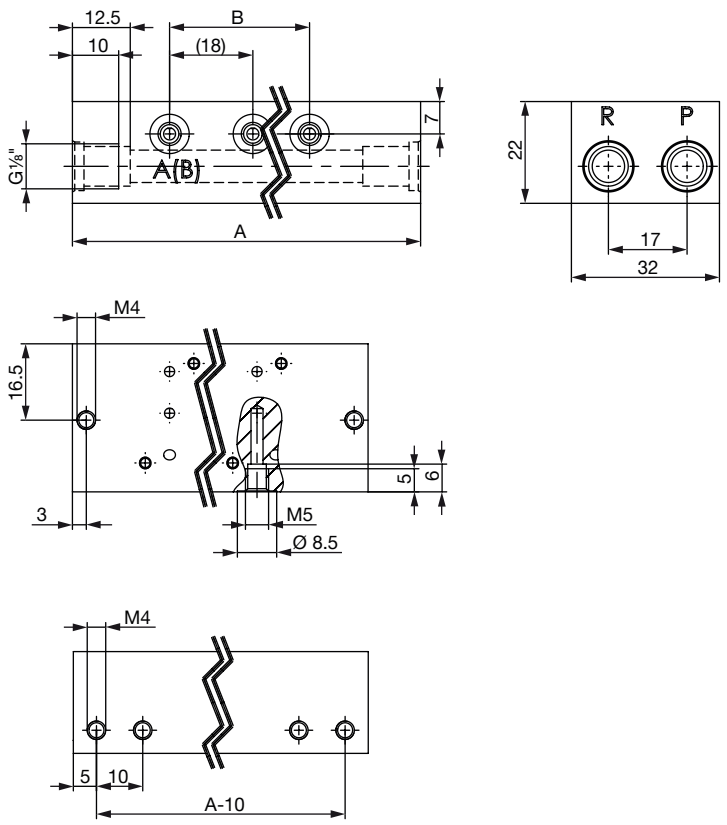

Manifold	A	B	n	Article no.
2-fold	63	18	2	658695
3-fold	81	36	3	658696
4-fold	99	54	4	658697
5-fold	117	72	5	658698
6-fold	135	90	6	658699
8-fold	171	126	8	658700
10-fold	207	162	10	658701
12-fold	243	198	12	658703

DTS 1000138746 EN Version: F Status: RL (released | freigegeben | validé) printed: 27.01.2023

Single manifolds for Bürkert sub-base interface 3-way

Note:

- Dimensions in mm
- Port connection M5
- Material aluminium (black anodized)
- Consider the screw protrusion!
- Further versions on request

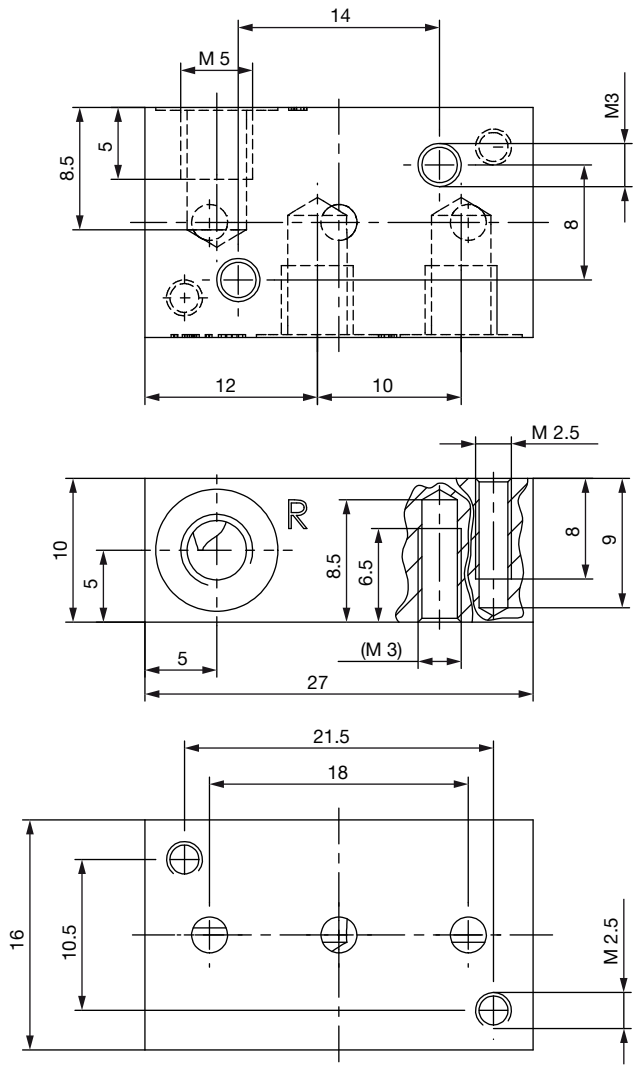

Manifold	Article no.
1-fold	623873

DTS 1000138746 EN Version: F Status: RL (released | freigegeben | validé) printed: 27.01.2023

Note:

- Dimensions in mm
- Port connection G ⅛"
- Material aluminium (black anodized)
- Consider the screw protrusion!
- Further versions on request

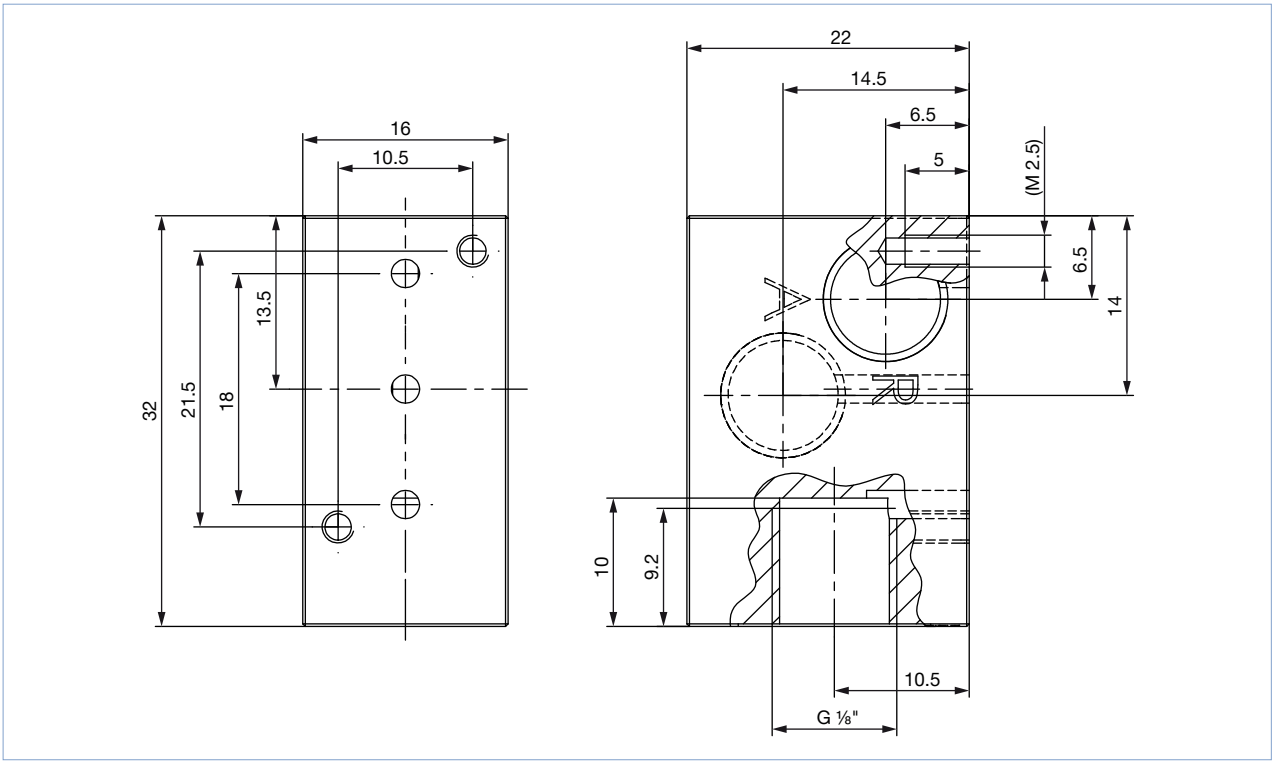

Manifold	Article no.
1-fold	634917

DTS 1000138746 EN Version: F Status: RL (released | freigegeben | validé) printed: 27.01.2023

Bürkert – Close to You

For up-to-date addresses
please visit us at
www.burkert.com

DTS 1000138746 EN Version: F Status: RL (released | freigegeben | validé) printed: 27.01.2023

Credits, © and concept: Christian Bürkert GmbH & Co. KG | Photographs: Marc Eggimann Fotografie - 4051 Basel | Scanner GmbH - Werbeagentur Künzelsau - 74653 Künzelsau