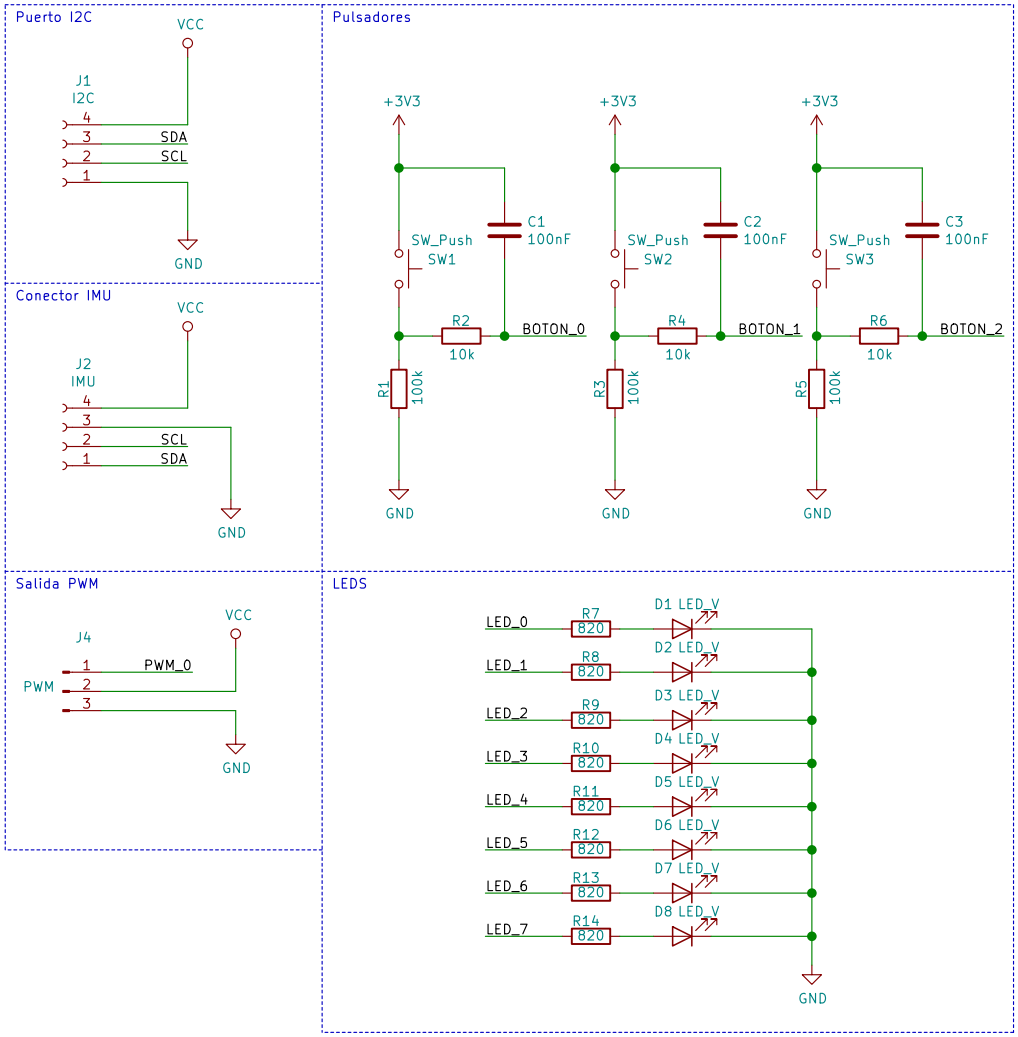

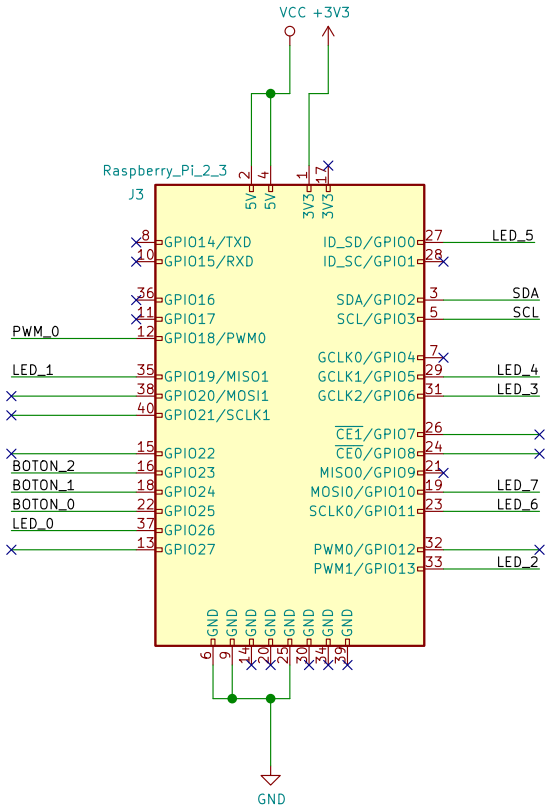

Sheet: /
File: raspberry_pi_hat.sch

Title: RaspberryPi Hat – Info1

Size: A4	Date: 2020-03-14	Rev: V 1.0
KiCad E.D.A. kicad 5.1.5-52549c584ubuntu18.04.1		Id: 1/1