? * ???	???	00
??	????	
1		
2		
3		
4		

Pls confrim the wire connection!

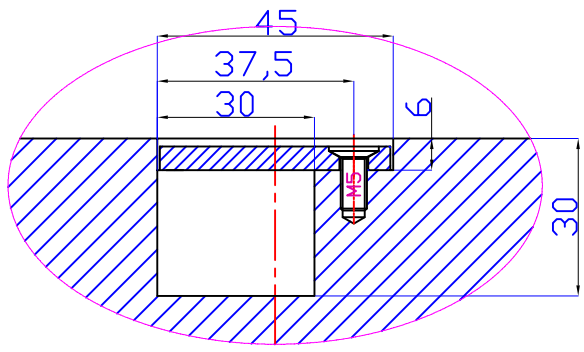

DETAIL : B–B
SCALE 2:1

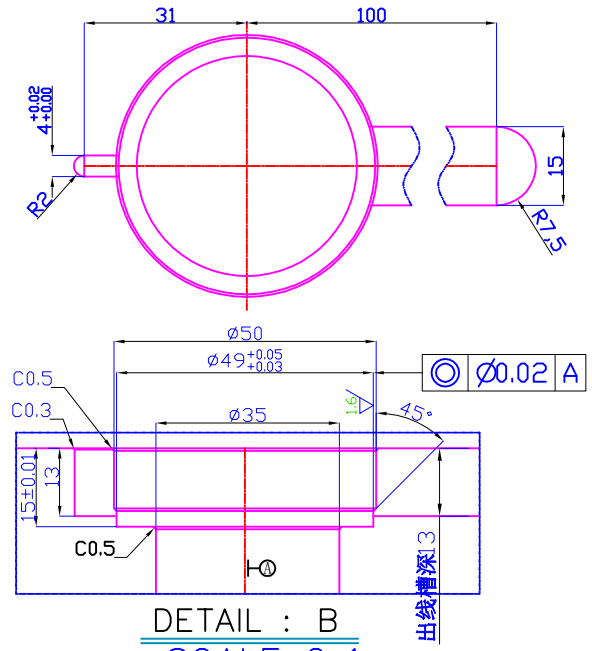

DETAIL : B
SCALE 2:1

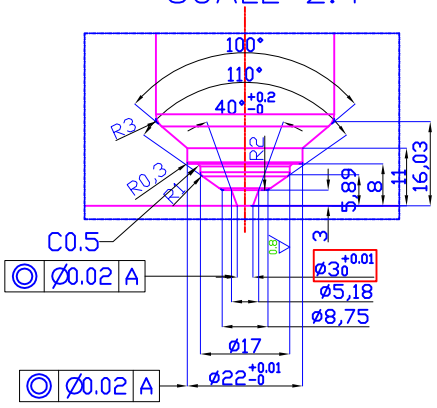

DETAIL : C
SCALE 2:1

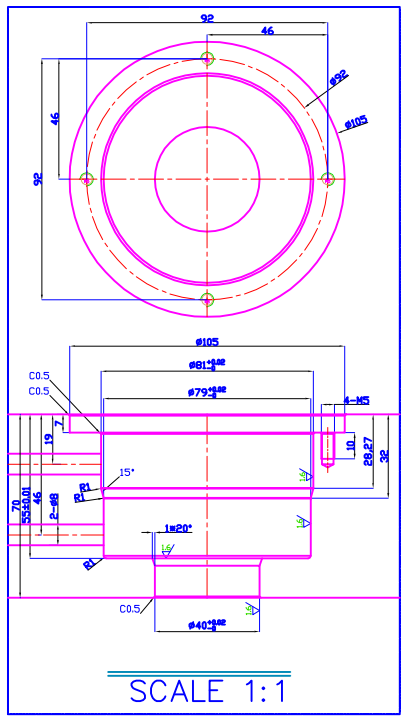

SCALE 1:1

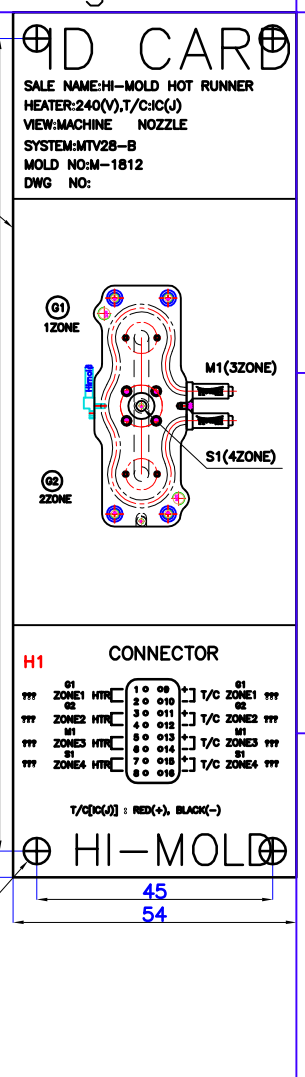

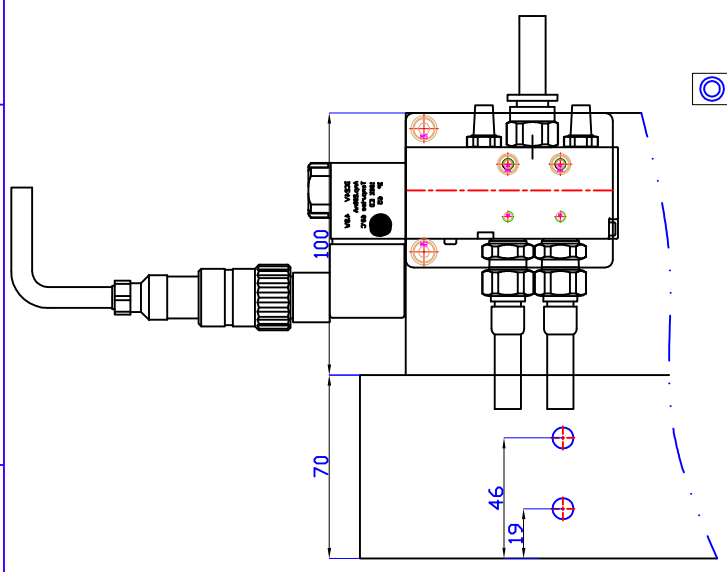

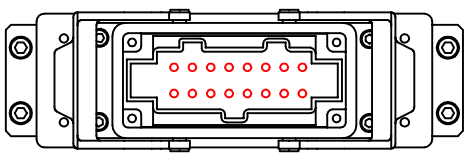

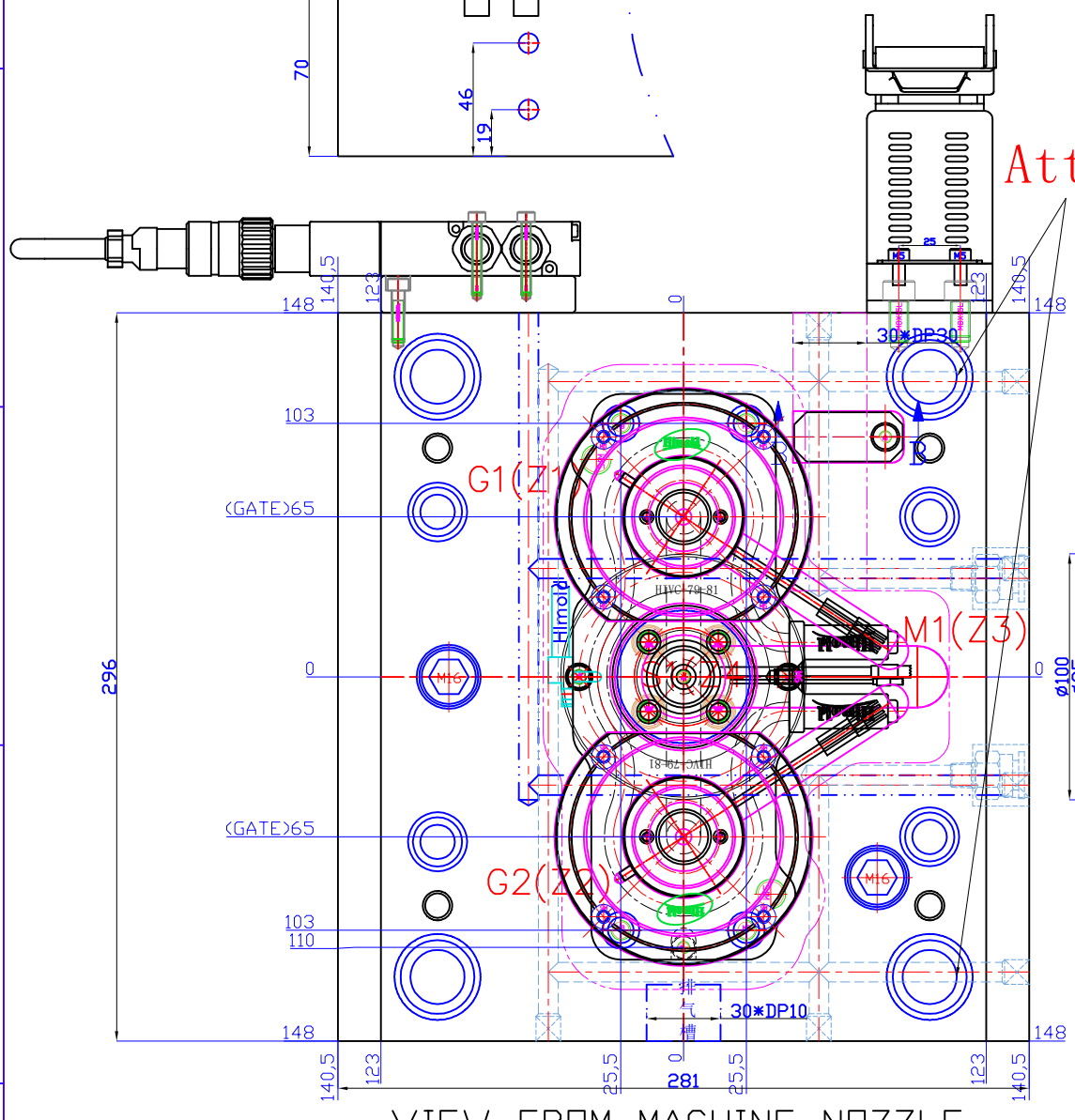

VIEW FROM MACHINE NOZZLE

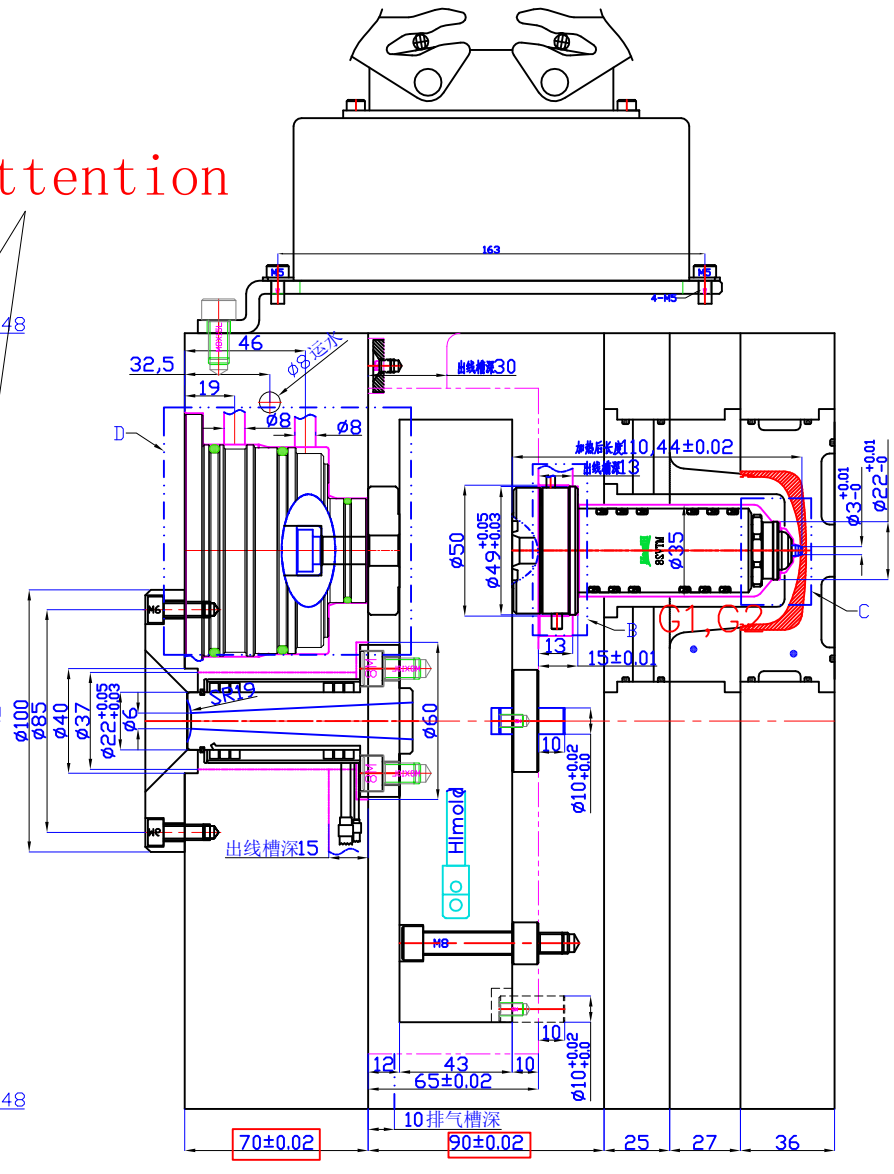

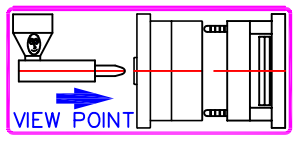

热流道系统确认图		签名
? 1: ?????????????		确认OK可按图加工。
? 2: GATE??????OK?		姓名:
? 3: ?????????OK?		日期:
? 4: ?????????OK?		电话:
? 5: ??????????OK?		

Unless otherwise stated, tolerance press table

dimension	tolerance length	tolerance angle
<200	±0.1	±0.5°
200~500	±0.3	
500~800	±0.5	
>800	±1.0	

hot runner system						
DwgNo:	HM18120073	material	PMMA	surface	***	
customer		color	***	weight	29.6g*2	
design	??? 2018.12.22	customer no	M-1812			
check		rev	A	scale	1:1	unit mm drawing assm
approve		angle of view		page 1	total 1	