第 * 次修改	版本号	00

序号	修改内容
1	
2	
3	
4	

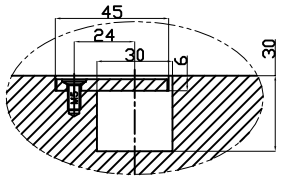

DETAIL : B–B
SCALE 2:1

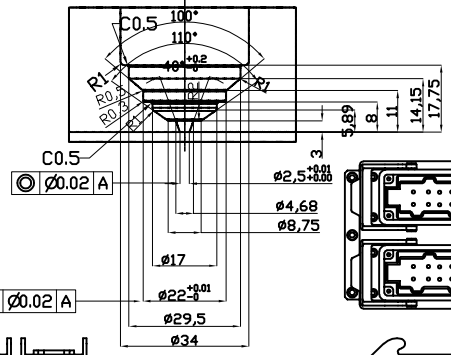

DETAIL : C
SCALE 3:1

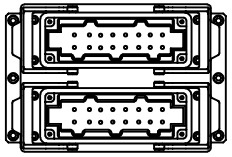

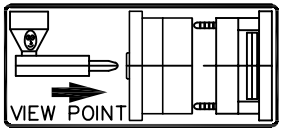

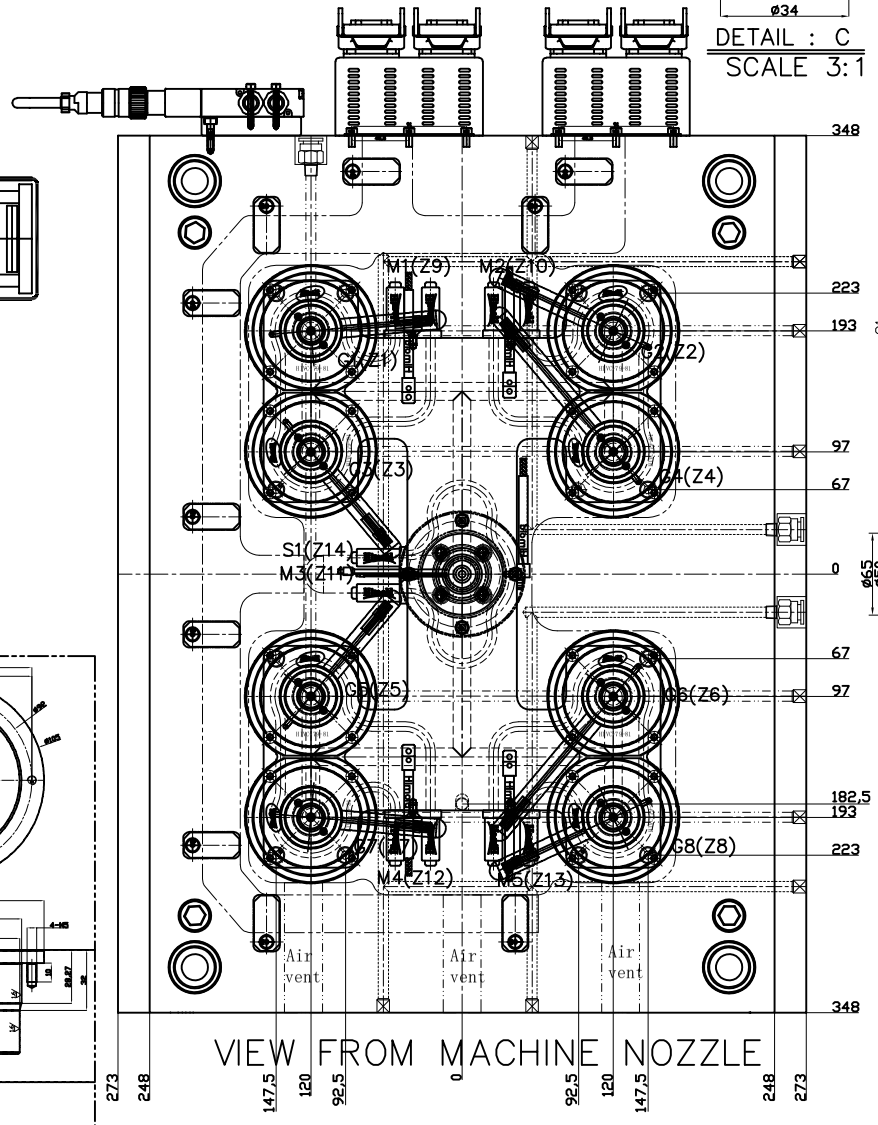

VIEW FROM MACHINE NOZZLE

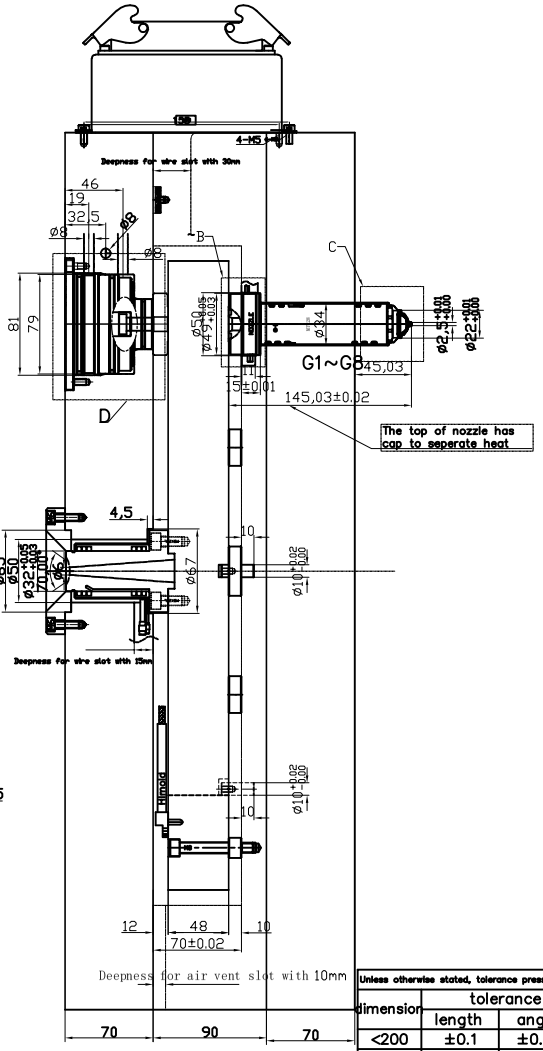

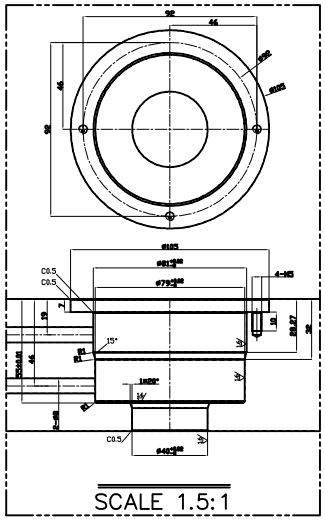

SCALE 1.5:1

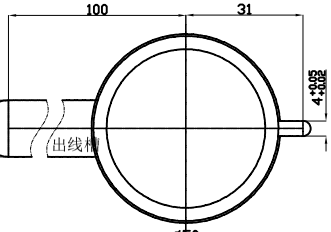

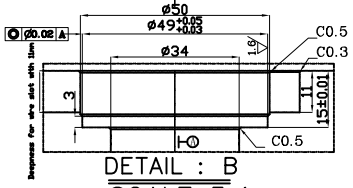

DETAIL : B
SCALE 3:1

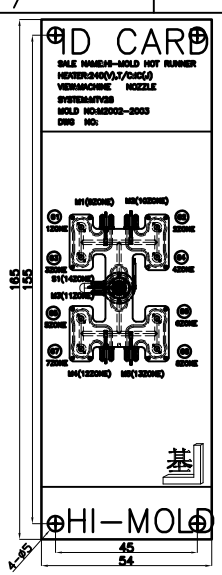

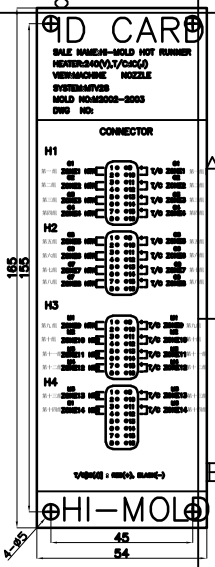

Unless otherwise stated, tolerance press table			hot runner system						
dimension	tolerance length	tolerance angle							
<200	±0.1	±0.5°							
200~500	±0.3		DwgNo:	HM19060020	material	PMMA	surface	***	
500~800	±0.5		customer	FA	color	***	weight	***g	
>800	±1.0								
design	XYF 2019.06.05		customer no	M2002/M2003					
check			rev	A	scale	1:1	unit	mm	drawing assm
approve			angle of view				page 1		total 1