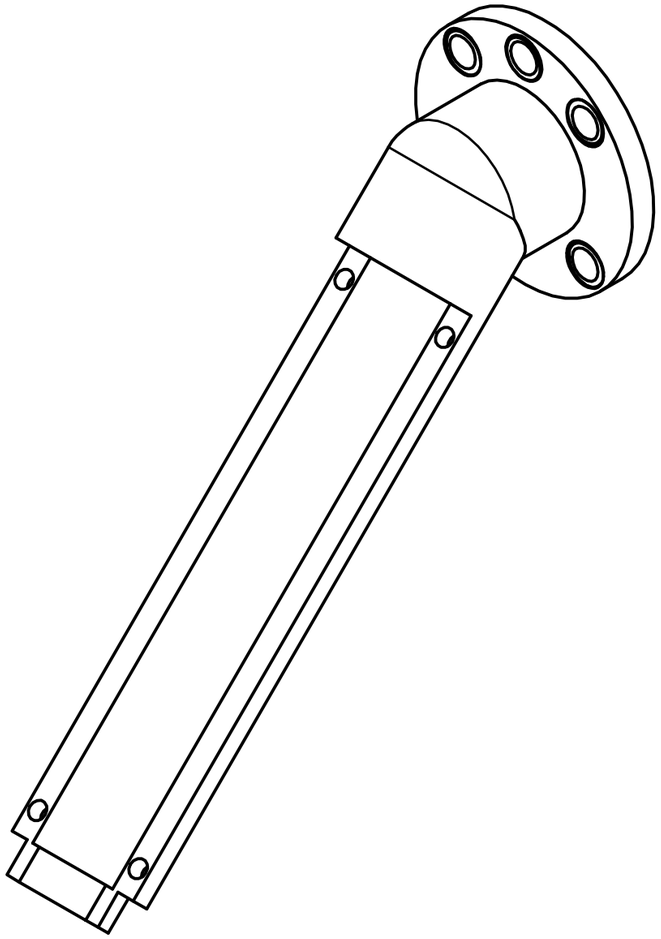

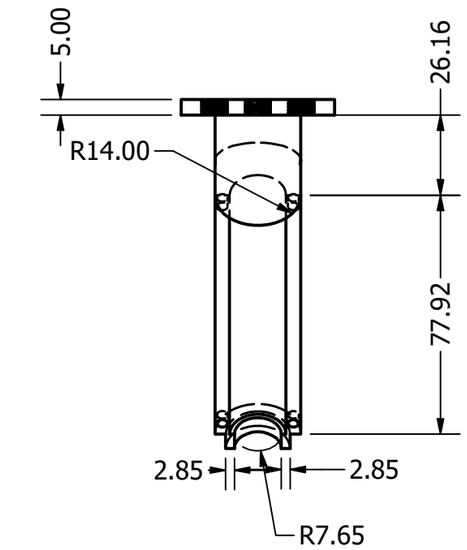

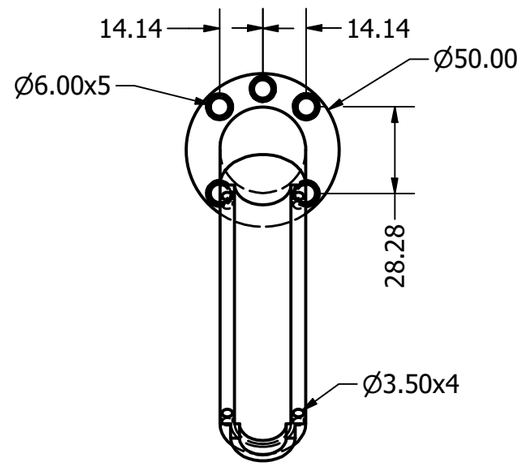

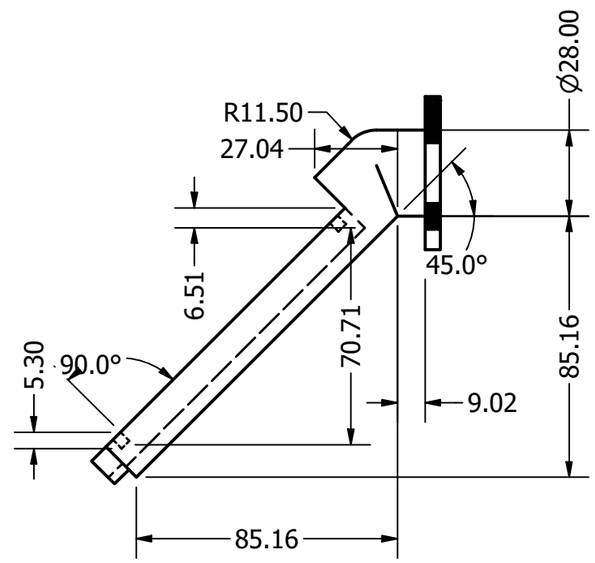

DRAWN Santiago Mariño C.	20/09/2025	
CHECKED Juan José Delgado E.	23/09/2025	TITLE
QA		Plano Base de la herramienta
MFG		
APPROVED		

SIZE		DWG NO	REV
A3		1	1
SCALE 1 / 2		SHEET 1 OF 1	