A = Dividendo → Q

B = Divisor

R_0 = Bit menos significativo de R

A_{MSB} = Bit mas significativo de A

i = cantidad de bits de B

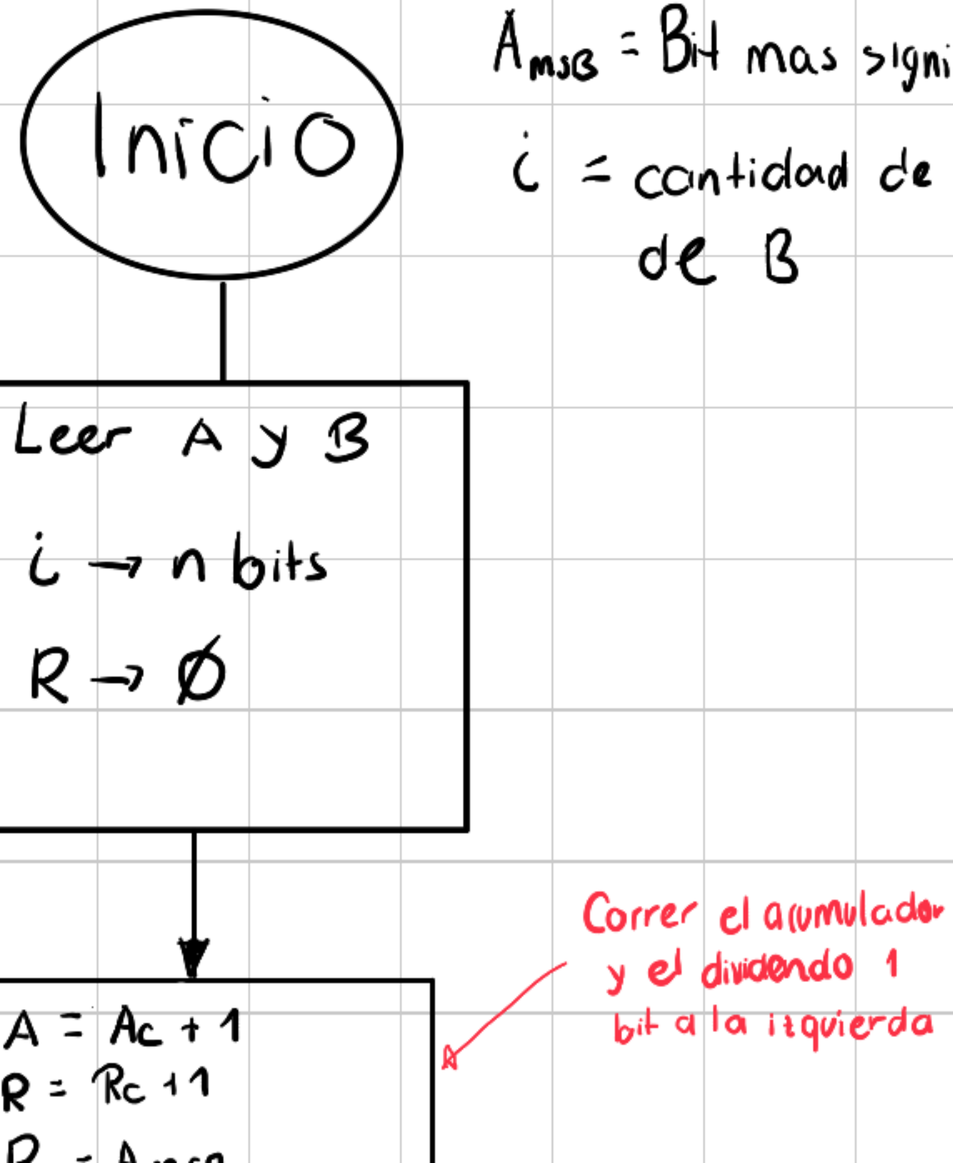

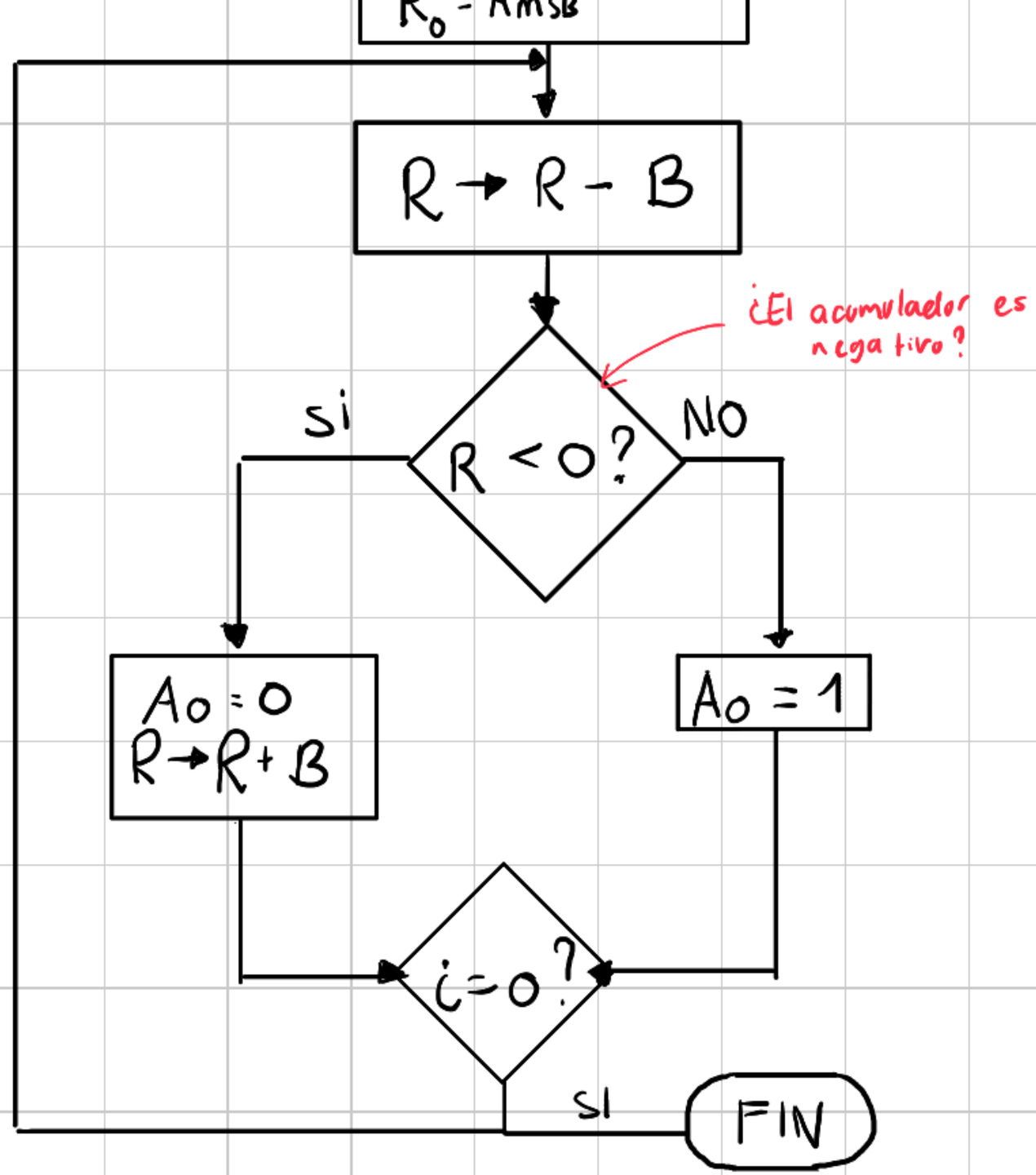
$R_0 = AMSB$
$R \rightarrow R - B$
¿El acumulador es negativo?
$R < 0$?
SI
NO
$A_0 = 0$
$R \rightarrow R + B$
$A_0 = 1$
$i = 0$?
SI
FIN

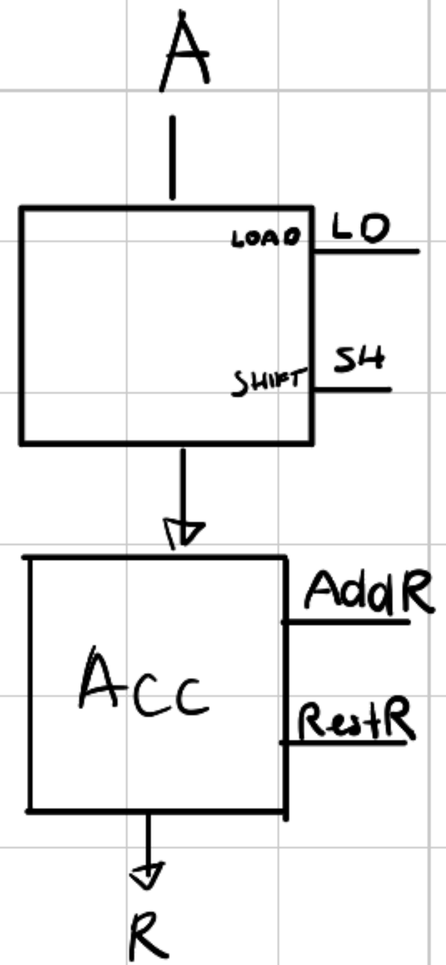
A
LOAD
LD
SHIFT
SH
AddR
Acc
RestR
R

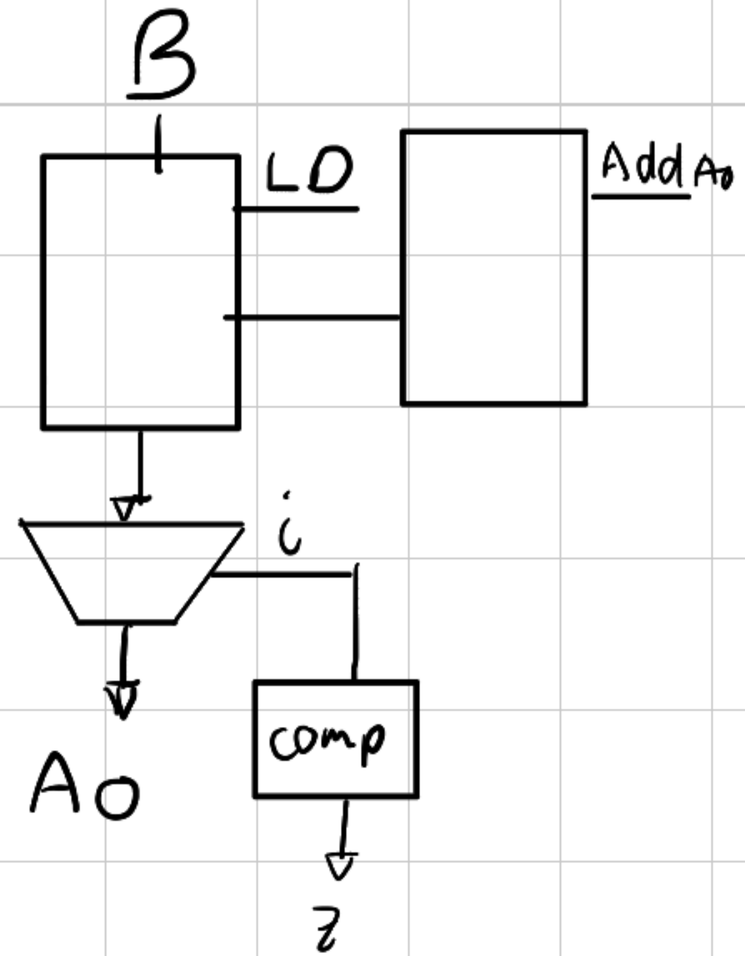
B
LD
AddA0
i
A0
comp
Z

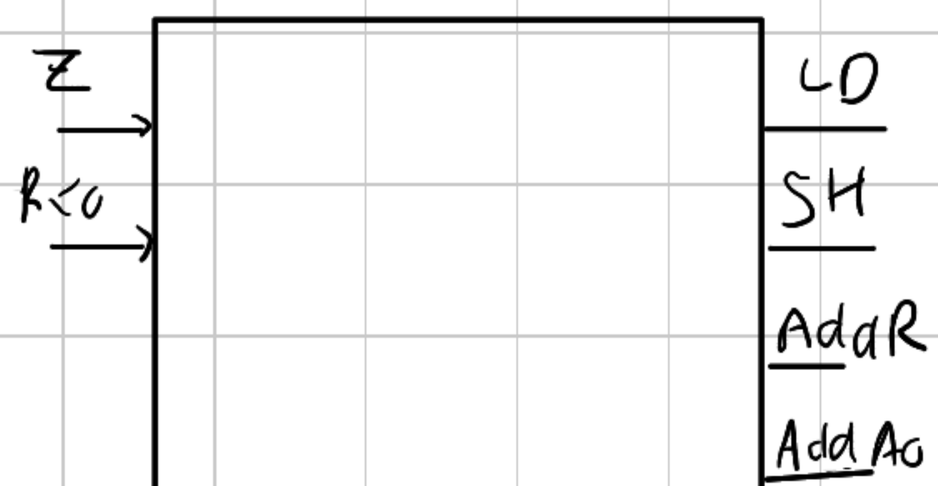
Z
R<0
LD
SH
AddR
AddA0

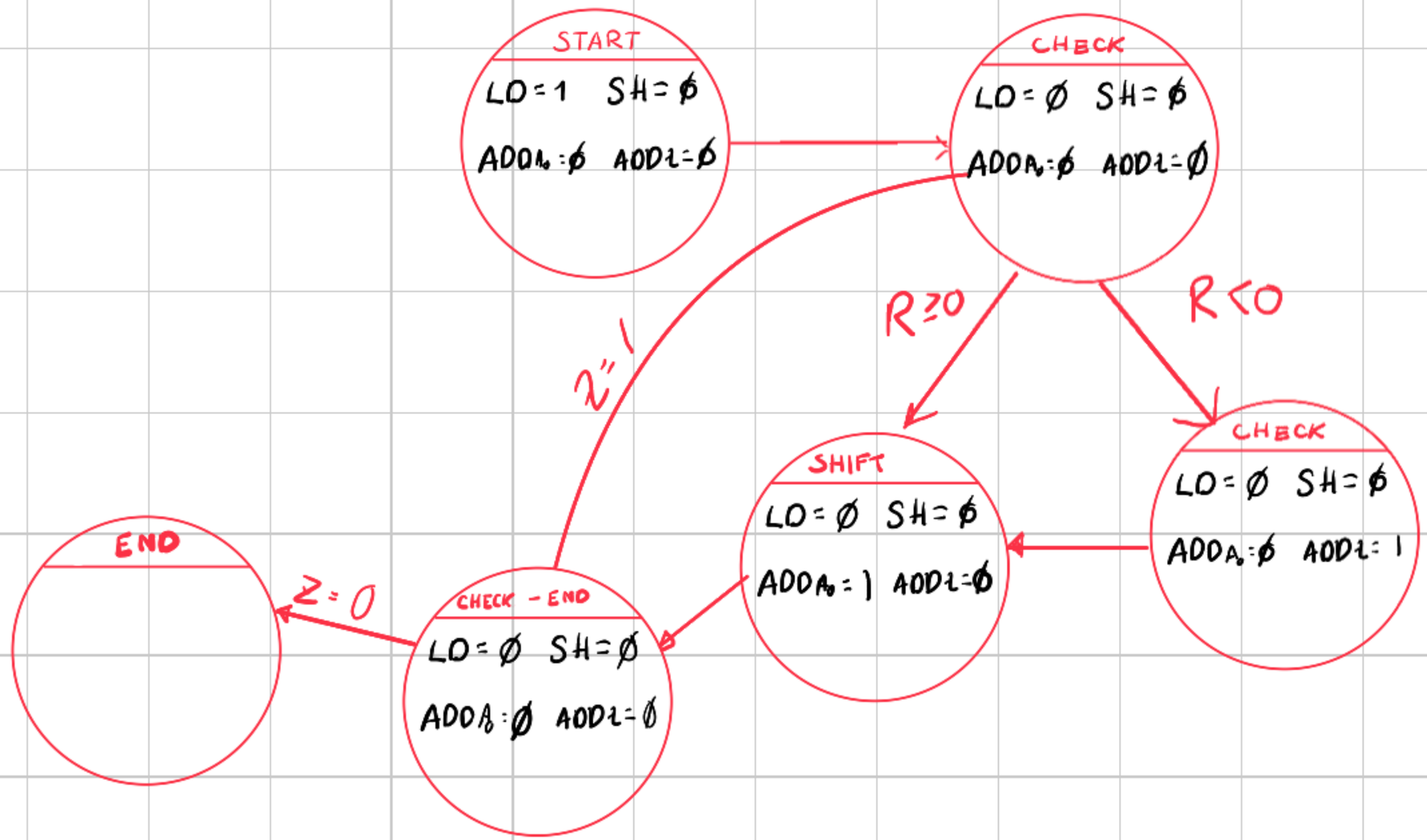
START
LD = 1 SH = ϕ
ADDA = ϕ ADDL = ϕ
CHECK
LD = Ø SH = ϕ
ADDA = ϕ ADDL = Ø
R ≥ 0
R < 0
Z = 1
SHIFT
LD = Ø SH = ϕ
ADDA = 1 ADDL = ϕ
CHECK
LD = Ø SH = ϕ
ADDA = ϕ ADDL = 1
END
Z = 0
CHECK - END
LD = Ø SH = Ø
ADDA = Ø ADDL = Ø