Atmel ATmega640/V-1280/V-1281/V-2560/V-2561/V

8-bit Atmel Microcontroller with 16/32/64KB In-System Programmable Flash

DATASHEET

Features

- High Performance, Low Power Atmel® AVR® 8-Bit Microcontroller
- Advanced RISC Architecture
  - 135 Powerful Instructions – Most Single Clock Cycle Execution
  - 32 × 8 General Purpose Working Registers
  - Fully Static Operation
  - Up to 16 MIPS Throughput at 16MHz
  - On-Chip 2-cycle Multiplier
- High Endurance Non-volatile Memory Segments
  - 64K/128K/256KBytes of In-System Self-Programmable Flash
  - 4Kbytes EEPROM
  - 8Kbytes Internal SRAM
  - Write/Erase Cycles:10,000 Flash/100,000 EEPROM
  - Data retention: 20 years at 85°C/ 100 years at 25°C
  - Optional Boot Code Section with Independent Lock Bits
    - In-System Programming by On-chip Boot Program
    - True Read-While-Write Operation
  - Programming Lock for Software Security
    - Endurance: Up to 64Kbytes Optional External Memory Space
- Atmel® QTouch® library support
  - Capacitive touch buttons, sliders and wheels
  - QTouch and QMatrix acquisition
  - Up to 64 sense channels
- JTAG (IEEE® std. 1149.1 compliant) Interface
  - Boundary-scan Capabilities According to the JTAG Standard
  - Extensive On-chip Debug Support
  - Programming of Flash, EEPROM, Fuses, and Lock Bits through the JTAG Interface
- Peripheral Features
  - Two 8-bit Timer/Counters with Separate Prescaler and Compare Mode
  - Four 16-bit Timer/Counter with Separate Prescaler, Compare- and Capture Mode
  - Real Time Counter with Separate Oscillator
  - Four 8-bit PWM Channels
  - Six/Twelve PWM Channels with Programmable Resolution from 2 to 16 Bits (ATmega1281/2561, ATmega640/1280/2560)
  - Output Compare Modulator
  - 8/16-channel, 10-bit ADC (ATmega1281/2561, ATmega640/1280/2560)
  - Two/Four Programmable Serial USART (ATmega1281/2561, ATmega640/1280/2560)
  - Master/Slave SPI Serial Interface
  - Byte Oriented 2-wire Serial Interface
  - Programmable Watchdog Timer with Separate On-chip Oscillator
  - On-chip Analog Comparator
  - Interrupt and Wake-up on Pin Change
- Special Microcontroller Features
  - Power-on Reset and Programmable Brown-out Detection
  - Internal Calibrated Oscillator
  - External and Internal Interrupt Sources
  - Six Sleep Modes: Idle, ADC Noise Reduction, Power-save, Power-down, Standby, and Extended Standby
- I/O and Packages
  - 54/86 Programmable I/O Lines (ATmega1281/2561, ATmega640/1280/2560)
  - 64-pad QFN/MLF, 64-lead TQFP (ATmega1281/2561)
  - 100-lead TQFP, 100-ball CBGA (ATmega640/1280/2560)
  - RoHS/Fully Green
- Temperature Range:
  - -40°C to 85°C Industrial
- Ultra-Low Power Consumption
  - Active Mode: 1MHz, 1.8V: 500µA
  - Power-down Mode: 0.1µA at 1.8V
- Speed Grade:
  - ATmega640V/ATmega1280V/ATmega1281V:
    - 0 - 4MHz @ 1.8V - 5.5V, 0 - 8MHz @ 2.7V - 5.5V
  - ATmega2560V/ATmega2561V:
    - 0 - 2MHz @ 1.8V - 5.5V, 0 - 8MHz @ 2.7V - 5.5V
  - ATmega640/ATmega1280/ATmega1281:
    - 0 - 8MHz @ 2.7V - 5.5V, 0 - 16MHz @ 4.5V - 5.5V
  - ATmega2560/ATmega2561:
    - 0 - 16MHz @ 4.5V - 5.5V

1. Pin Configurations

Figure 1-1. TQFP-pinout ATmega640/1280/2560

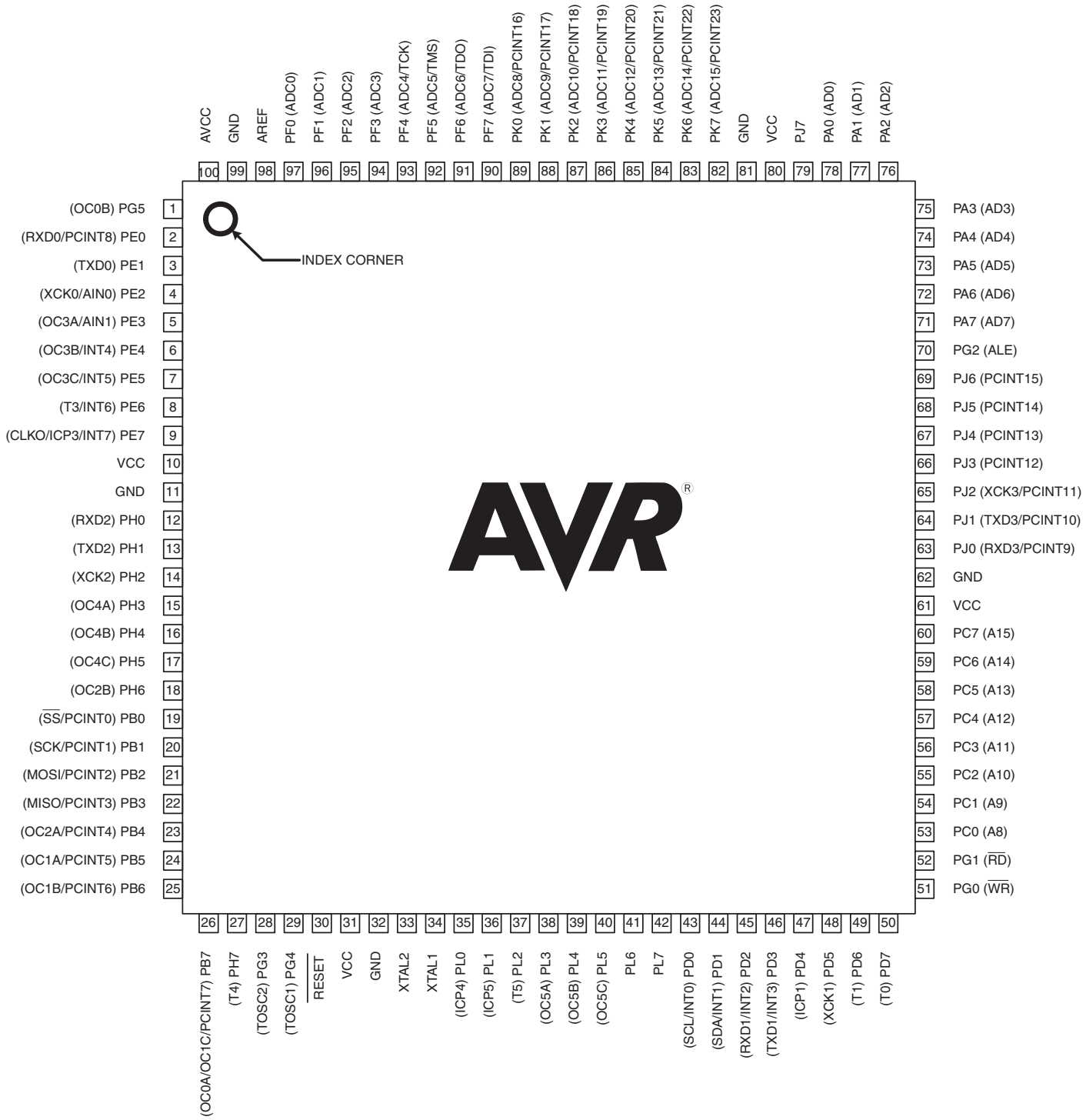

Figure 1-2. CBGA-pinout ATmega640/1280/2560

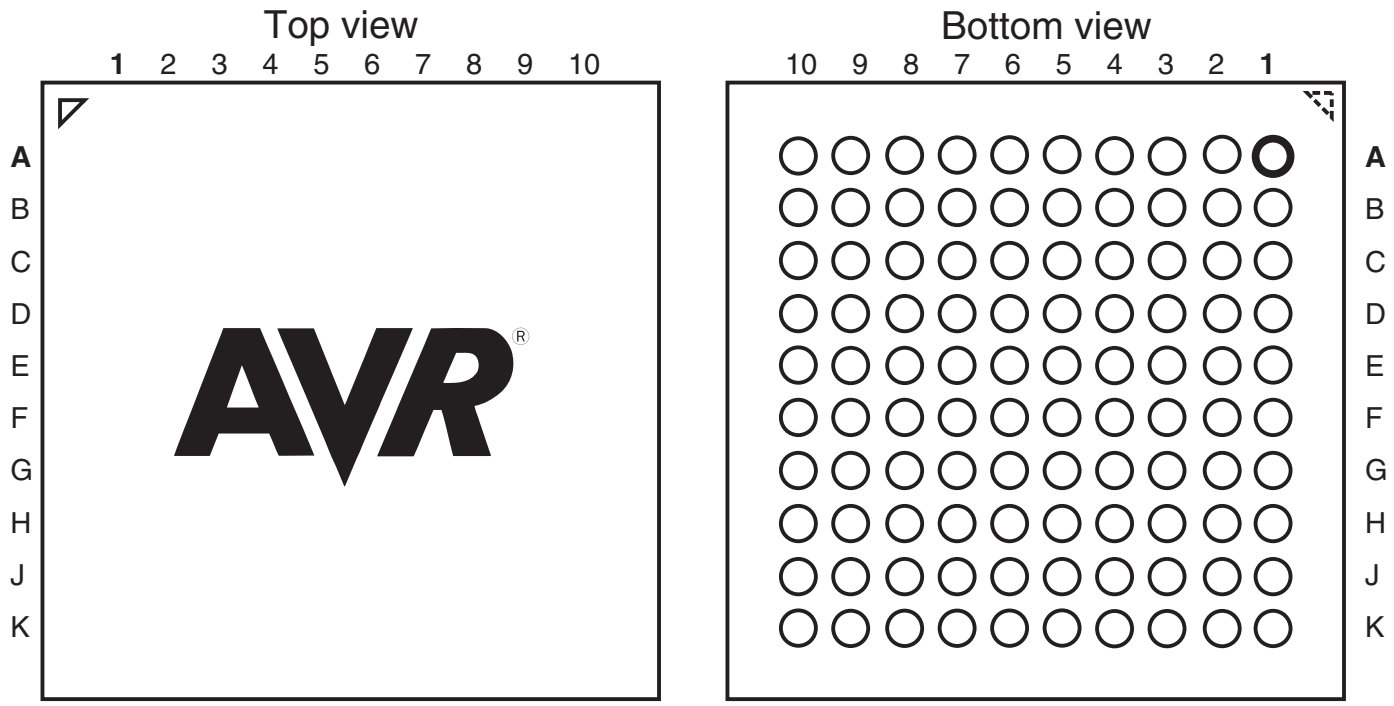

Table 1-1. CBGA-pinout ATmega640/1280/2560

	1	2	3	4	5	6	7	8	9	10
A	GND	AREF	PF0	PF2	PF5	PK0	PK3	PK6	GND	VCC
B	AVCC	PG5	PF1	PF3	PF6	PK1	PK4	PK7	PA0	PA2
C	PE2	PE0	PE1	PF4	PF7	PK2	PK5	PJ7	PA1	PA3
D	PE3	PE4	PE5	PE6	PH2	PA4	PA5	PA6	PA7	PG2
E	PE7	PH0	PH1	PH3	PH5	PJ6	PJ5	PJ4	PJ3	PJ2
F	VCC	PH4	PH6	PB0	PL4	PD1	PJ1	PJ0	PC7	GND
G	GND	PB1	PB2	PB5	PL2	PD0	PD5	PC5	PC6	VCC
H	PB3	PB4	RESET	PL1	PL3	PL7	PD4	PC4	PC3	PC2
J	PH7	PG3	PB6	PL0	XTAL2	PL6	PD3	PC1	PC0	PG1
K	PB7	PG4	VCC	GND	XTAL1	PL5	PD2	PD6	PD7	PG0

Note: The functions for each pin is the same as for the 100 pin packages shown in Figure 1-1 on page 2.

Figure 1-3. Pinout ATmega1281/2561

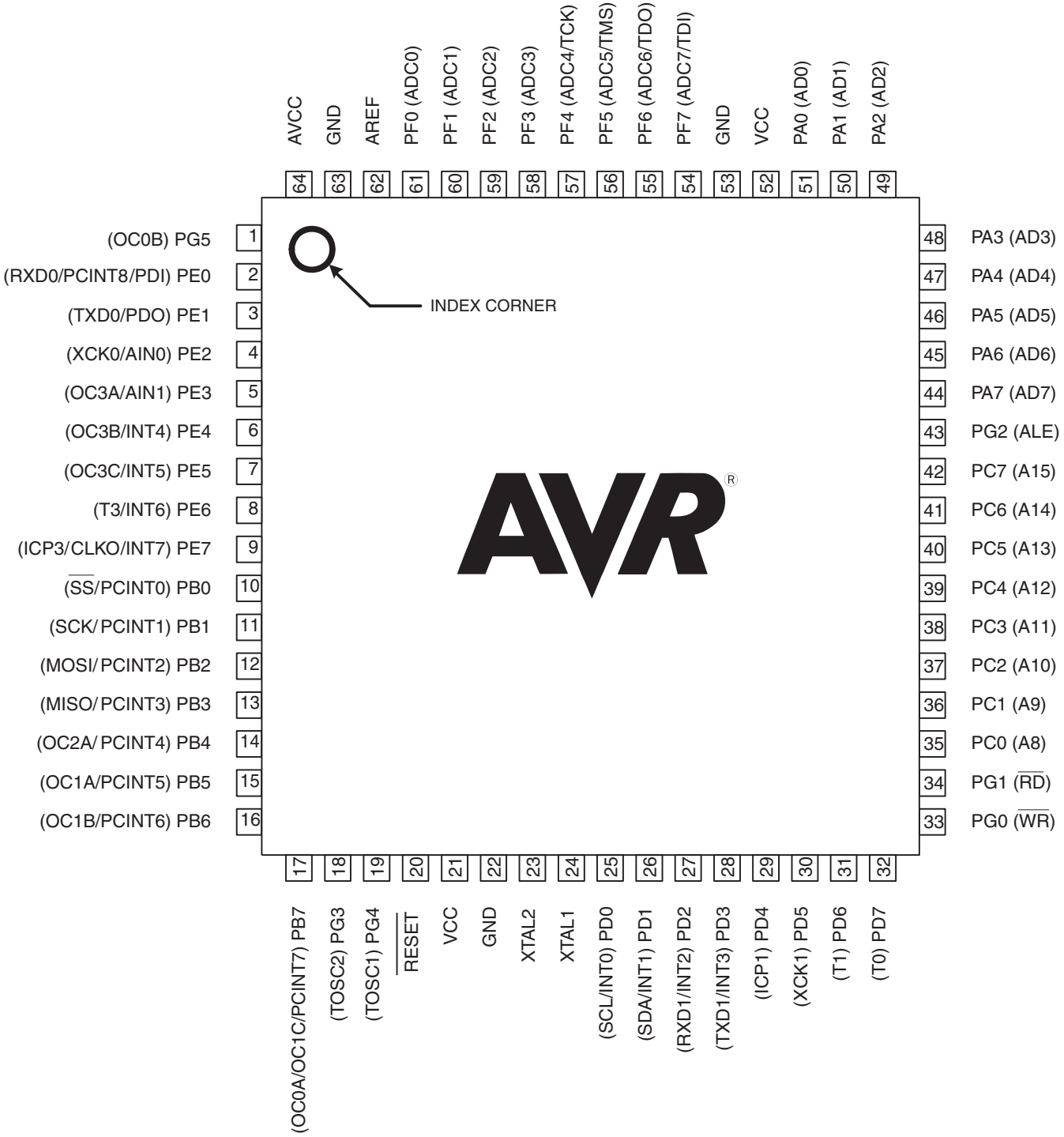

Note: The large center pad underneath the QFN/MLF package is made of metal and internally connected to GND. It should be soldered or glued to the board to ensure good mechanical stability. If the center pad is left unconnected, the package might loosen from the board.

2. Overview

The ATmega640/1280/1281/2560/2561 is a low-power CMOS 8-bit microcontroller based on the AVR enhanced RISC architecture. By executing powerful instructions in a single clock cycle, the ATmega640/1280/1281/2560/2561 achieves throughputs approaching 1 MIPS per MHz allowing the system designer to optimize power consumption versus processing speed.

2.1 Block Diagram

Figure 2-1. Block Diagram

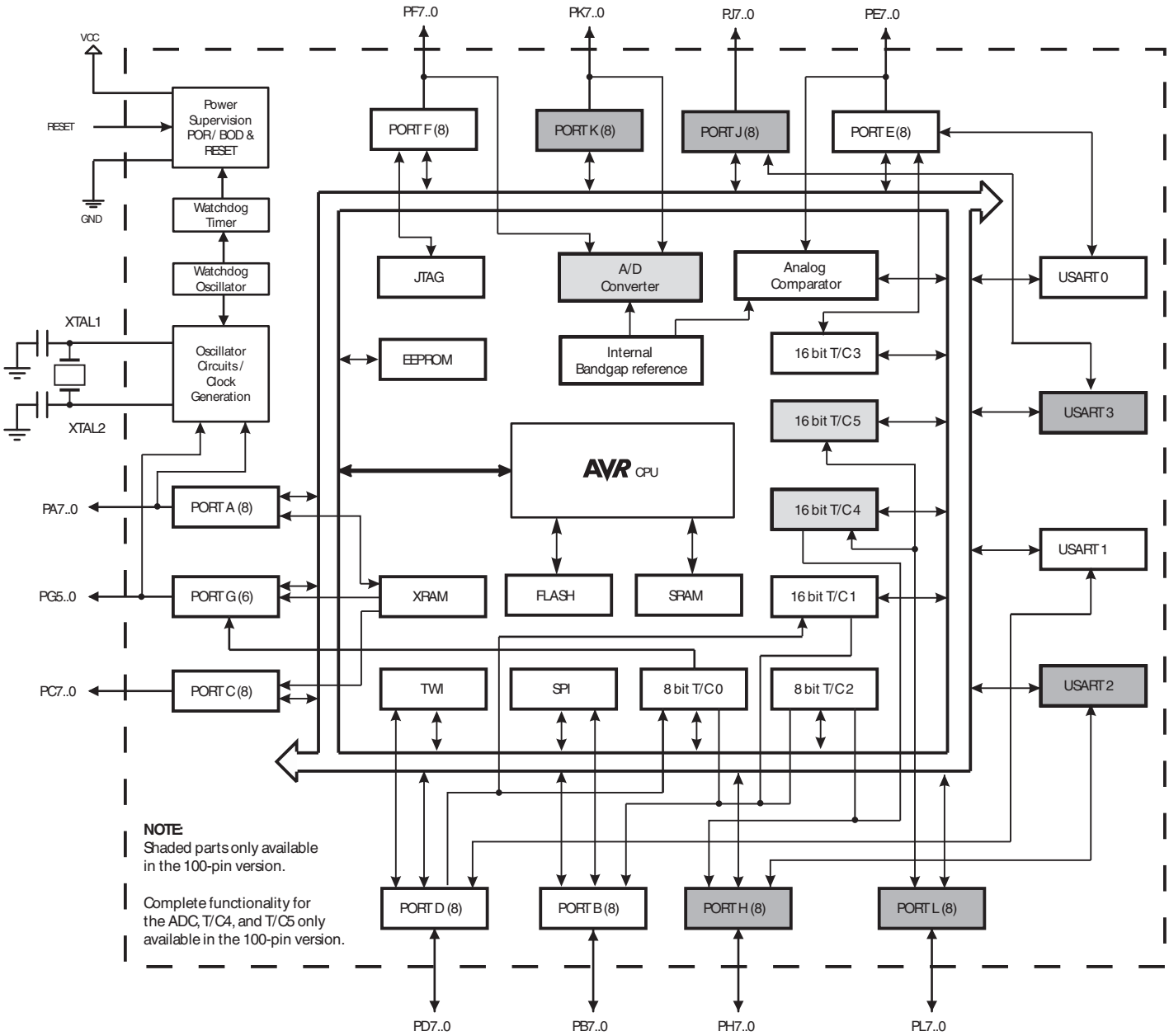

The Atmel® AVR® core combines a rich instruction set with 32 general purpose working registers. All the 32 registers are directly connected to the Arithmetic Logic Unit (ALU), allowing two independent registers to be accessed in one single instruction executed in one clock cycle. The resulting architecture is more code efficient while achieving throughputs up to ten times faster than conventional CISC microcontrollers.

The ATmega640/1280/1281/2560/2561 provides the following features: 64K/128K/256K bytes of In-System Programmable Flash with Read-While-Write capabilities, 4Kbytes EEPROM, 8Kbytes SRAM, 54/86 general purpose I/O lines, 32 general purpose working registers, Real Time Counter (RTC), six flexible Timer/Counters with compare modes and PWM, four USARTs, a byte oriented 2-wire Serial Interface, a 16-channel, 10-bit ADC with optional differential input stage with programmable gain, programmable Watchdog Timer with Internal Oscillator, an SPI serial port, IEEE® std. 1149.1 compliant JTAG test interface, also used for accessing the On-chip Debug system and programming and six software selectable power saving modes. The Idle mode stops the CPU while allowing the SRAM, Timer/Counters, SPI port, and interrupt system to continue functioning. The Power-down mode saves the register contents but freezes the Oscillator, disabling all other chip functions until the next interrupt or Hardware Reset. In Power-save mode, the asynchronous timer continues to run, allowing the user to maintain a timer base while the rest of the device is sleeping. The ADC Noise Reduction mode stops the CPU and all I/O modules except Asynchronous Timer and ADC, to minimize switching noise during ADC conversions. In Standby mode, the Crystal/Resonator Oscillator is running while the rest of the device is sleeping. This allows very fast start-up combined with low power consumption. In Extended Standby mode, both the main Oscillator and the Asynchronous Timer continue to run.

Atmel offers the QTouch® library for embedding capacitive touch buttons, sliders and wheels functionality into AVR microcontrollers. The patented charge-transfer signal acquisition offersrobust sensing and includes fully debounced reporting of touch keys and includes Adjacent Key Suppression® (AKS®) technology for unambiguous detection of key events. The easy-to-use QTouch Suite toolchain allows you to explore, develop and debug your own touch applications.

The device is manufactured using the Atmel high-density nonvolatile memory technology. The On-chip ISP Flash allows the program memory to be reprogrammed in-system through an SPI serial interface, by a conventional nonvolatile memory programmer, or by an On-chip Boot program running on the AVR core. The boot program can use any interface to download the application program in the application Flash memory. Software in the Boot Flash section will continue to run while the Application Flash section is updated, providing true Read-While-Write operation. By combining an 8-bit RISC CPU with In-System Self-Programmable Flash on a monolithic chip, the Atmel ATmega640/1280/1281/2560/2561 is a powerful microcontroller that provides a highly flexible and cost effective solution to many embedded control applications.

The ATmega640/1280/1281/2560/2561 AVR is supported with a full suite of program and system development tools including: C compilers, macro assemblers, program debugger/simulators, in-circuit emulators, and evaluation kits.

2.2 Comparison Between ATmega1281/2561 and ATmega640/1280/2560

Each device in the ATmega640/1280/1281/2560/2561 family differs only in memory size and number of pins. Table 2-1 summarizes the different configurations for the six devices.

Table 2-1. Configuration Summary

Device	Flash	EEPROM	RAM	General Purpose I/O pins	16 bits resolution PWM channels	Serial USARTs	ADC Channels
ATmega640	64KB	4KB	8KB	86	12	4	16
ATmega1280	128KB	4KB	8KB	86	12	4	16
ATmega1281	128KB	4KB	8KB	54	6	2	8
ATmega2560	256KB	4KB	8KB	86	12	4	16
ATmega2561	256KB	4KB	8KB	54	6	2	8

2.3 Pin Descriptions

2.3.1 VCC

Digital supply voltage.

2.3.2 GND

Ground.

2.3.3 Port A (PA7..PA0)

Port A is an 8-bit bi-directional I/O port with internal pull-up resistors (selected for each bit). The Port A output buffers have symmetrical drive characteristics with both high sink and source capability. As inputs, Port A pins that are externally pulled low will source current if the pull-up resistors are activated. The Port A pins are tri-stated when a reset condition becomes active, even if the clock is not running.

Port A also serves the functions of various special features of the ATmega640/1280/1281/2560/2561 as listed on page 75.

2.3.4 Port B (PB7..PB0)

Port B is an 8-bit bi-directional I/O port with internal pull-up resistors (selected for each bit). The Port B output buffers have symmetrical drive characteristics with both high sink and source capability. As inputs, Port B pins that are externally pulled low will source current if the pull-up resistors are activated. The Port B pins are tri-stated when a reset condition becomes active, even if the clock is not running.

Port B has better driving capabilities than the other ports.

Port B also serves the functions of various special features of the ATmega640/1280/1281/2560/2561 as listed on page 76.

2.3.5 Port C (PC7..PC0)

Port C is an 8-bit bi-directional I/O port with internal pull-up resistors (selected for each bit). The Port C output buffers have symmetrical drive characteristics with both high sink and source capability. As inputs, Port C pins that are externally pulled low will source current if the pull-up resistors are activated. The Port C pins are tri-stated when a reset condition becomes active, even if the clock is not running.

Port C also serves the functions of special features of the ATmega640/1280/1281/2560/2561 as listed on page 79.

2.3.6 Port D (PD7..PD0)

Port D is an 8-bit bi-directional I/O port with internal pull-up resistors (selected for each bit). The Port D output buffers have symmetrical drive characteristics with both high sink and source capability. As inputs, Port D pins that are externally pulled low will source current if the pull-up resistors are activated. The Port D pins are tri-stated when a reset condition becomes active, even if the clock is not running.

Port D also serves the functions of various special features of the ATmega640/1280/1281/2560/2561 as listed on page 80.

2.3.7 Port E (PE7..PE0)

Port E is an 8-bit bi-directional I/O port with internal pull-up resistors (selected for each bit). The Port E output buffers have symmetrical drive characteristics with both high sink and source capability. As inputs, Port E pins that are externally pulled low will source current if the pull-up resistors are activated. The Port E pins are tri-stated when a reset condition becomes active, even if the clock is not running.

Port E also serves the functions of various special features of the ATmega640/1280/1281/2560/2561 as listed on page 82.

2.3.8 Port F (PF7..PF0)

Port F serves as analog inputs to the A/D Converter.

Port F also serves as an 8-bit bi-directional I/O port, if the A/D Converter is not used. Port pins can provide internal pull-up resistors (selected for each bit). The Port F output buffers have symmetrical drive characteristics with both high sink and source capability. As inputs, Port F pins that are externally pulled low will source current if the pull-up resistors are activated. The Port F pins are tri-stated when a reset condition becomes active, even if the clock is not running. If the JTAG interface is enabled, the pull-up resistors on pins PF7(TDI), PF5(TMS), and PF4(TCK) will be activated even if a reset occurs.

Port F also serves the functions of the JTAG interface.

2.3.9 Port G (PG5..PG0)

Port G is a 6-bit I/O port with internal pull-up resistors (selected for each bit). The Port G output buffers have symmetrical drive characteristics with both high sink and source capability. As inputs, Port G pins that are externally pulled low will source current if the pull-up resistors are activated. The Port G pins are tri-stated when a reset condition becomes active, even if the clock is not running.

Port G also serves the functions of various special features of the ATmega640/1280/1281/2560/2561 as listed on page 86.

2.3.10 Port H (PH7..PH0)

Port H is a 8-bit bi-directional I/O port with internal pull-up resistors (selected for each bit). The Port H output buffers have symmetrical drive characteristics with both high sink and source capability. As inputs, Port H pins that are externally pulled low will source current if the pull-up resistors are activated. The Port H pins are tri-stated when a reset condition becomes active, even if the clock is not running.

Port H also serves the functions of various special features of the ATmega640/1280/2560 as listed on page 88.

2.3.11 Port J (PJ7..PJ0)

Port J is a 8-bit bi-directional I/O port with internal pull-up resistors (selected for each bit). The Port J output buffers have symmetrical drive characteristics with both high sink and source capability. As inputs, Port J pins that are externally pulled low will source current if the pull-up resistors are activated. The Port J pins are tri-stated when a reset condition becomes active, even if the clock is not running. Port J also serves the functions of various special features of the ATmega640/1280/2560 as listed on page 90.

2.3.12 Port K (PK7..PK0)

Port K serves as analog inputs to the A/D Converter.

Port K is a 8-bit bi-directional I/O port with internal pull-up resistors (selected for each bit). The Port K output buffers have symmetrical drive characteristics with both high sink and source capability. As inputs, Port K pins that are externally pulled low will source current if the pull-up resistors are activated. The Port K pins are tri-stated when a reset condition becomes active, even if the clock is not running.

Port K also serves the functions of various special features of the ATmega640/1280/2560 as listed on page 92.

2.3.13 Port L (PL7..PL0)

Port L is a 8-bit bi-directional I/O port with internal pull-up resistors (selected for each bit). The Port L output buffers have symmetrical drive characteristics with both high sink and source capability. As inputs, Port L pins that are externally pulled low will source current if the pull-up resistors are activated. The Port L pins are tri-stated when a reset condition becomes active, even if the clock is not running.

Port L also serves the functions of various special features of the ATmega640/1280/2560 as listed on page 94.

2.3.14 $\overline{\text{RESET}}$

Reset input. A low level on this pin for longer than the minimum pulse length will generate a reset, even if the clock is not running. The minimum pulse length is given in “System and Reset Characteristics” on page 360. Shorter pulses are not guaranteed to generate a reset.

2.3.15 XTAL1

Input to the inverting Oscillator amplifier and input to the internal clock operating circuit.

2.3.16 XTAL2

Output from the inverting Oscillator amplifier.

2.3.17 AVCC

AVCC is the supply voltage pin for Port F and the A/D Converter. It should be externally connected to V_{CC}, even if the ADC is not used. If the ADC is used, it should be connected to V_{CC} through a low-pass filter.

2.3.18 AREF

This is the analog reference pin for the A/D Converter.

3. Resources

A comprehensive set of development tools and application notes, and datasheets are available for download on http://www.atmel.com/avr.

4. About Code Examples

This documentation contains simple code examples that briefly show how to use various parts of the device. Be aware that not all C compiler vendors include bit definitions in the header files and interrupt handling in C is compiler dependent. Confirm with the C compiler documentation for more details.

These code examples assume that the part specific header file is included before compilation. For I/O registers located in extended I/O map, "IN", "OUT", "SBIS", "SBIC", "CBI", and "SBI" instructions must be replaced with instructions that allow access to extended I/O. Typically "LDS" and "STS" combined with "SBRS", "SBRC", "SBR", and "CBR".

5. Data Retention

Reliability Qualification results show that the projected data retention failure rate is much less than 1 ppm over 20 years at 85°C or 100 years at 25°C.

6. Capacitive touch sensing

The Atmel® QTouch® Library provides a simple to use solution to realize touch sensitive interfaces on most Atmel AVR® microcontrollers. The QTouch Library includes support for the QTouch and QMatrix acquisition methods.

Touch sensing can be added to any application by linking the appropriate Atmel QTouch Library for the AVR Microcontroller. This is done by using a simple set of APIs to define the touch channels and sensors, and then calling the touch sensing API's to retrieve the channel information and determine the touch sensor states.

The QTouch Library is FREE and downloadable from the Atmel website at the following location: www.atmel.com/qtouchlibrary. For implementation details and other information, refer to the Atmel QTouch Library User Guide - also available for download from the Atmel website.

7. AVR CPU Core

7.1 Introduction

This section discusses the AVR core architecture in general. The main function of the CPU core is to ensure correct program execution. The CPU must therefore be able to access memories, perform calculations, control peripherals, and handle interrupts.

7.2 Architectural Overview

Figure 7-1. Block Diagram of the AVR Architecture

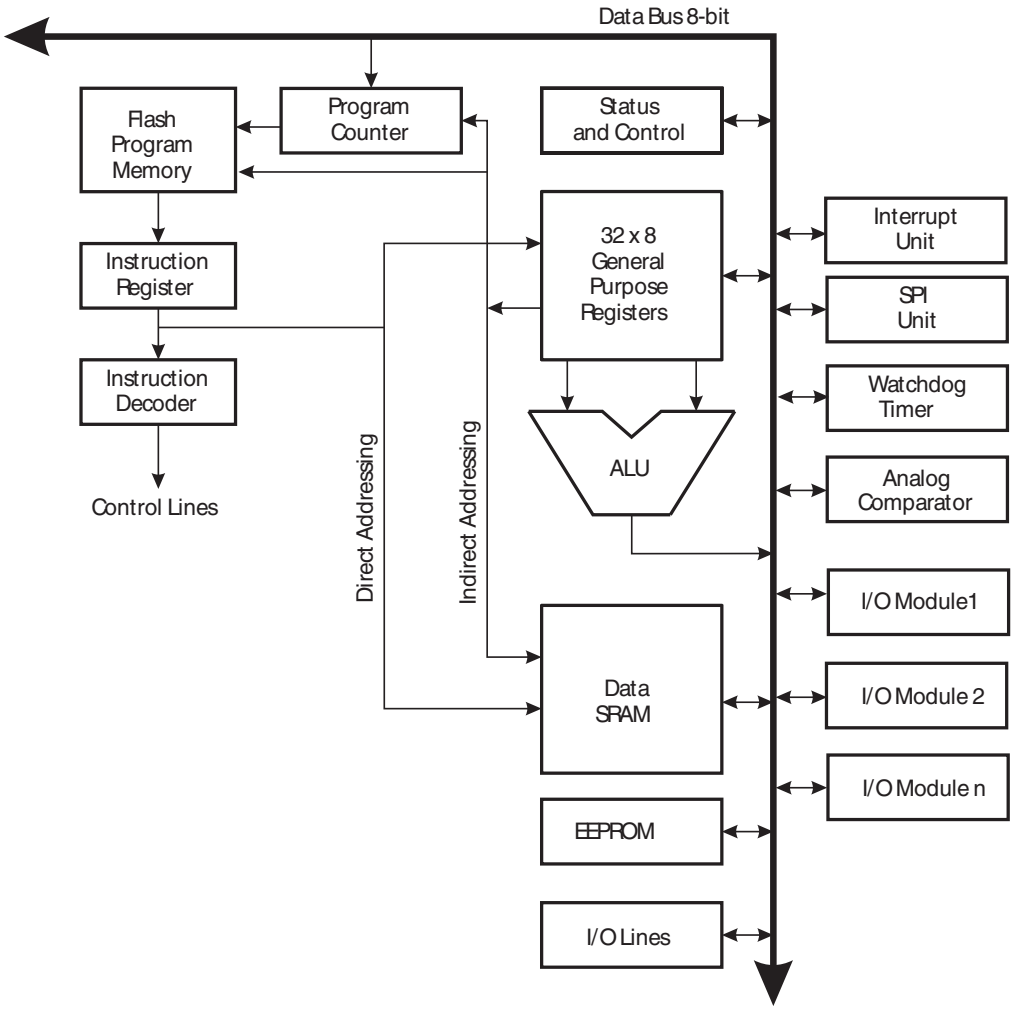

In order to maximize performance and parallelism, the AVR uses a Harvard architecture – with separate memories and buses for program and data. Instructions in the program memory are executed with a single level pipelining. While one instruction is being executed, the next instruction is pre-fetched from the program memory. This concept enables instructions to be executed in every clock cycle. The program memory is In-System Reprogrammable Flash memory.

The fast-access Register File contains 32 × 8-bit general purpose working registers with a single clock cycle access time. This allows single-cycle Arithmetic Logic Unit (ALU) operation. In a typical ALU operation, two oper-

ands are output from the Register File, the operation is executed, and the result is stored back in the Register File – in one clock cycle.

Six of the 32 registers can be used as three 16-bit indirect address register pointers for Data Space addressing – enabling efficient address calculations. One of the these address pointers can also be used as an address pointer for look up tables in Flash program memory. These added function registers are the 16-bit X-, Y-, and Z-register, described later in this section.

The ALU supports arithmetic and logic operations between registers or between a constant and a register. Single register operations can also be executed in the ALU. After an arithmetic operation, the Status Register is updated to reflect information about the result of the operation.

Program flow is provided by conditional and unconditional jump and call instructions, able to directly address the whole address space. Most AVR instructions have a single 16-bit word format. Every program memory address contains a 16-bit or 32-bit instruction.

Program Flash memory space is divided in two sections, the Boot Program section and the Application Program section. Both sections have dedicated Lock bits for write and read/write protection. The SPM instruction that writes into the Application Flash memory section must reside in the Boot Program section.

During interrupts and subroutine calls, the return address Program Counter (PC) is stored on the Stack. The Stack is effectively allocated in the general data SRAM, and consequently the Stack size is only limited by the total SRAM size and the usage of the SRAM. All user programs must initialize the SP in the Reset routine (before subroutines or interrupts are executed). The Stack Pointer (SP) is read/write accessible in the I/O space. The data SRAM can easily be accessed through the five different addressing modes supported in the AVR architecture.

The memory spaces in the AVR architecture are all linear and regular memory maps.

A flexible interrupt module has its control registers in the I/O space with an additional Global Interrupt Enable bit in the Status Register. All interrupts have a separate Interrupt Vector in the Interrupt Vector table. The interrupts have priority in accordance with their Interrupt Vector position. The lower the Interrupt Vector address, the higher the priority.

The I/O memory space contains 64 addresses for CPU peripheral functions as Control Registers, SPI, and other I/O functions. The I/O Memory can be accessed directly, or as the Data Space locations following those of the Register File, 0x20 - 0x5F. In addition, the ATmega640/1280/1281/2560/2561 has Extended I/O space from 0x60 - 0x1FF in SRAM where only the ST/STS/STD and LD/LDS/LDD instructions can be used.

7.3 ALU – Arithmetic Logic Unit

The high-performance AVR ALU operates in direct connection with all the 32 general purpose working registers. Within a single clock cycle, arithmetic operations between general purpose registers or between a register and an immediate are executed. The ALU operations are divided into three main categories – arithmetic, logical, and bit-functions. Some implementations of the architecture also provide a powerful multiplier supporting both signed/unsigned multiplication and fractional format. See the “Instruction Set Summary” on page 404 for a detailed description.

7.4 Status Register

The Status Register contains information about the result of the most recently executed arithmetic instruction. This information can be used for altering program flow in order to perform conditional operations. Note that the Status Register is updated after all ALU operations, as specified in the “Instruction Set Summary” on page 404. This will in many cases remove the need for using the dedicated compare instructions, resulting in faster and more compact code.

The Status Register is not automatically stored when entering an interrupt routine and restored when returning from an interrupt. This must be handled by software.

7.4.1 SREG – AVR Status Register

The AVR Status Register – SREG – is defined as:

Bit	7	6	5	4	3	2	1	0	
0x3F (0x5F)	**I**	**T**	**H**	**S**	**V**	**N**	**Z**	**C**	**SREG**
Read/Write	R/W	R/W	R/W	R/W	R/W	R/W	R/W	R/W	
Initial Value	0	0	0	0	0	0	0	0	

- **Bit 7 – I: Global Interrupt Enable**

The Global Interrupt Enable bit must be set for the interrupts to be enabled. The individual interrupt enable control is then performed in separate control registers. If the Global Interrupt Enable Register is cleared, none of the interrupts are enabled independent of the individual interrupt enable settings. The I-bit is cleared by hardware after an interrupt has occurred, and is set by the RETI instruction to enable subsequent interrupts. The I-bit can also be set and cleared by the application with the SEI and CLI instructions, as described in the "Instruction Set Summary" on page 404.

- **Bit 6 – T: Bit Copy Storage**

The Bit Copy instructions BLD (Bit LoaD) and BST (Bit STore) use the T-bit as source or destination for the operated bit. A bit from a register in the Register File can be copied into T by the BST instruction, and a bit in T can be copied into a bit in a register in the Register File by the BLD instruction.

- **Bit 5 – H: Half Carry Flag**

The Half Carry Flag H indicates a Half Carry in some arithmetic operations. Half Carry Is useful in BCD arithmetic. See the "Instruction Set Summary" on page 404 for detailed information.

- **Bit 4 – S: Sign Bit, S = N ⊕ V**

The S-bit is always an exclusive or between the Negative Flag N and the Two's Complement Overflow Flag V. See the "Instruction Set Summary" on page 404 for detailed information.

- **Bit 3 – V: Two's Complement Overflow Flag**

The Two's Complement Overflow Flag V supports two's complement arithmetics. See the "Instruction Set Summary" on page 404 for detailed information.

- **Bit 2 – N: Negative Flag**

The Negative Flag N indicates a negative result in an arithmetic or logic operation. See the "Instruction Set Summary" on page 404 for detailed information.

- **Bit 1 – Z: Zero Flag**

The Zero Flag Z indicates a zero result in an arithmetic or logic operation. See the "Instruction Set Summary" on page 404 for detailed information.

- **Bit 0 – C: Carry Flag**

The Carry Flag C indicates a carry in an arithmetic or logic operation. See the "Instruction Set Summary" on page 404 for detailed information.

7.5 General Purpose Register File

The Register File is optimized for the AVR Enhanced RISC instruction set. In order to achieve the required performance and flexibility, the following input/output schemes are supported by the Register File:

- One 8-bit output operand and one 8-bit result input
- Two 8-bit output operands and one 8-bit result input

- Two 8-bit output operands and one 16-bit result input
- One 16-bit output operand and one 16-bit result input

Figure 7-2 shows the structure of the 32 general purpose working registers in the CPU.

Figure 7-2. AVR CPU General Purpose Working Registers

	7 … 0	Addr.	
	R0	0x00	
	R1	0x01	
	R2	0x02	
	…		
	R13	0x0D	
General	R14	0x0E	
Purpose	R15	0x0F	
Working	R16	0x10	
Registers	R17	0x11	
	…		
	R26	0x1A	X-register Low Byte
	R27	0x1B	X-register High Byte
	R28	0x1C	Y-register Low Byte
	R29	0x1D	Y-register High Byte
	R30	0x1E	Z-register Low Byte
	R31	0x1F	Z-register High Byte

Most of the instructions operating on the Register File have direct access to all registers, and most of them are single cycle instructions.

As shown in Figure 7-2, each register is also assigned a data memory address, mapping them directly into the first 32 locations of the user Data Space. Although not being physically implemented as SRAM locations, this memory organization provides great flexibility in access of the registers, as the X-, Y- and Z-pointer registers can be set to index any register in the file.

7.5.1 The X-register, Y-register, and Z-register

The registers R26..R31 have some added functions to their general purpose usage. These registers are 16-bit address pointers for indirect addressing of the data space. The three indirect address registers X, Y, and Z are defined as described in Figure 7-3.

Figure 7-3. The X-, Y-, and Z-registers

X-register	15 XH … 0	7 … XL 0
	R27 (0x1B)	R26 (0x1A)
Y-register	15 YH … 0	7 … YL 0
	R29 (0x1D)	R28 (0x1C)
Z-register	15 ZH … 0	7 … ZL 0
	R31 (0x1F)	R30 (0x1E)

In the different addressing modes these address registers have functions as fixed displacement, automatic increment, and automatic decrement (see the “Instruction Set Summary” on page 404 for details).

7.6 Stack Pointer

The Stack is mainly used for storing temporary data, for storing local variables and for storing return addresses after interrupts and subroutine calls. The Stack Pointer Register always points to the top of the Stack. Note that the Stack is implemented as growing from higher memory locations to lower memory locations. This implies that a Stack PUSH command decreases the Stack Pointer.

The Stack Pointer points to the data SRAM Stack area where the Subroutine and Interrupt Stacks are located. This Stack space in the data SRAM must be defined by the program before any subroutine calls are executed or interrupts are enabled. The Stack Pointer must be set to point above 0x0200. The initial value of the stack pointer is the last address of the internal SRAM. The Stack Pointer is decremented by one when data is pushed onto the Stack with the PUSH instruction, and it is decremented by two for ATmega640/1280/1281 and three for ATmega2560/2561 when the return address is pushed onto the Stack with subroutine call or interrupt. The Stack Pointer is incremented by one when data is popped from the Stack with the POP instruction, and it is incremented by two for ATmega640/1280/1281 and three for ATmega2560/2561 when data is popped from the Stack with return from subroutine RET or return from interrupt RETI.

The AVR Stack Pointer is implemented as two 8-bit registers in the I/O space. The number of bits actually used is implementation dependent. Note that the data space in some implementations of the AVR architecture is so small that only SPL is needed. In this case, the SPH Register will not be present.

Bit	15	14	13	12	11	10	9	8	
0x3E (0x5E)	**SP15**	**SP14**	**SP13**	**SP12**	**SP11**	**SP10**	**SP9**	**SP8**	**SPH**
0x3D (0x5D)	**SP7**	**SP6**	**SP5**	**SP4**	**SP3**	**SP2**	**SP1**	**SP0**	**SPL**
	7	6	5	4	3	2	1	0	
Read/Write	R/W	R/W	R/W	R/W	R/W	R/W	R/W	R/W	
	R/W	R/W	R/W	R/W	R/W	R/W	R/W	R/W	
Initial Value	0	0	1	0	0	0	0	1	
	1	1	1	1	1	1	1	1	

7.6.1 RAMPZ – Extended Z-pointer Register for ELPM/SPM

Bit	7	6	5	4	3	2	1	0	
0x3B (0x5B)	RAMPZ7	RAMPZ6	RAMPZ5	RAMPZ4	RAMPZ3	RAMPZ2	RAMPZ1	RAMPZ0	RAMPZ
Read/Write	R/W	R/W	R/W	R/W	R/W	R/W	R/W	R/W	
Initial Value	0	0	0	0	0	0	0	0	

For ELPM/SPM instructions, the Z-pointer is a concatenation of RAMPZ, ZH, and ZL, as shown in Figure 7-4. Note that LPM is not affected by the RAMPZ setting.

Figure 7-4. The Z-pointer used by ELPM and SPM

Bit (Individually)	7	0	7	0	7	0
	RAMPZ		ZH		ZL	
Bit (Z-pointer)	23	16	15	8	7	0

The actual number of bits is implementation dependent. Unused bits in an implementation will always read as zero. For compatibility with future devices, be sure to write these bits to zero.

7.6.2 EIND – Extended Indirect Register

Bit	7	6	5	4	3	2	1	0	
0x3C (0x5C)	EIND7	EIND6	EIND5	EIND4	EIND3	EIND2	EIND1	EIND0	EIND
Read/Write	R/W	R/W	R/W	R/W	R/W	R/W	R/W	R/W	
Initial Value	0	0	0	0	0	0	0	0	

For EICALL/EIJMP instructions, the Indirect-pointer to the subroutine/routine is a concatenation of EIND, ZH, and ZL, as shown in Figure 7-5. Note that ICALL and IJMP are not affected by the EIND setting.

Figure 7-5. The Indirect-pointer used by EICALL and EIJMP

Bit (Individually)	7	0	7	0	7	0
	EIND		ZH		ZL	
Bit (Indirect-pointer)	23	16	15	8	7	0

The actual number of bits is implementation dependent. Unused bits in an implementation will always read as zero. For compatibility with future devices, be sure to write these bits to zero.

7.7 Instruction Execution Timing

This section describes the general access timing concepts for instruction execution. The AVR CPU is driven by the CPU clock clk_{CPU}, directly generated from the selected clock source for the chip. No internal clock division is used.

Figure 7-6 on page 17 shows the parallel instruction fetches and instruction executions enabled by the Harvard architecture and the fast-access Register File concept. This is the basic pipelining concept to obtain up to 1 MIPS per MHz with the corresponding unique results for functions per cost, functions per clocks, and functions per power-unit.

Figure 7-6. The Parallel Instruction Fetches and Instruction Executions

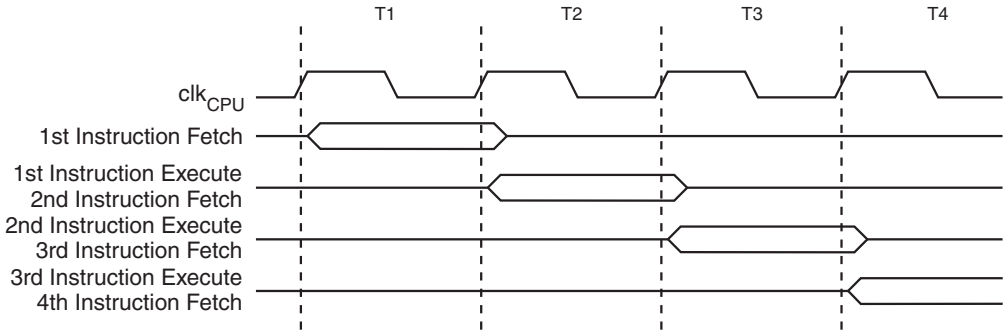

Figure 7-7 shows the internal timing concept for the Register File. In a single clock cycle an ALU operation using two register operands is executed, and the result is stored back to the destination register.

Figure 7-7. Single Cycle ALU Operation

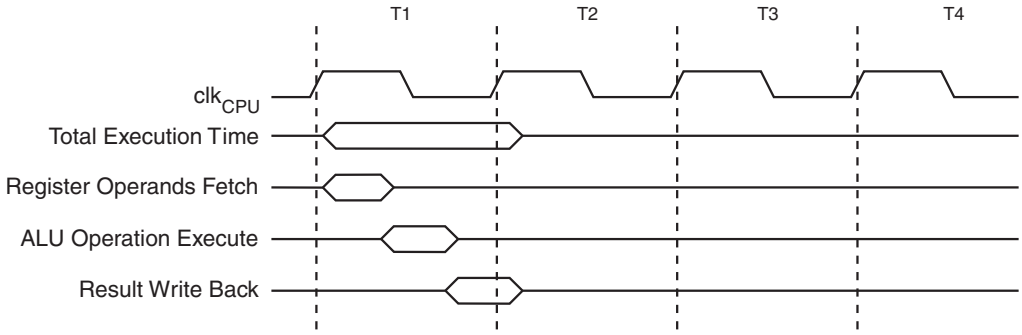

7.8 Reset and Interrupt Handling

The AVR provides several different interrupt sources. These interrupts and the separate Reset Vector each have a separate program vector in the program memory space. All interrupts are assigned individual enable bits which must be written logic one together with the Global Interrupt Enable bit in the Status Register in order to enable the interrupt. Depending on the Program Counter value, interrupts may be automatically disabled when Boot Lock bits BLB02 or BLB12 are programmed. This feature improves software security. See the section "Memory Programming" on page 325 for details.

The lowest addresses in the program memory space are by default defined as the Reset and Interrupt Vectors. The complete list of vectors is shown in "Interrupts" on page 101. The list also determines the priority levels of the different interrupts. The lower the address the higher is the priority level. RESET has the highest priority, and next is INT0 – the External Interrupt Request 0. The Interrupt Vectors can be moved to the start of the Boot Flash section by setting the IVSEL bit in the MCU Control Register (MCUCR). Refer to "Interrupts" on page 101 for more information. The Reset Vector can also be moved to the start of the Boot Flash section by programming the BOOTRST Fuse, see "Memory Programming" on page 325.

When an interrupt occurs, the Global Interrupt Enable I-bit is cleared and all interrupts are disabled. The user software can write logic one to the I-bit to enable nested interrupts. All enabled interrupts can then interrupt the current interrupt routine. The I-bit is automatically set when a Return from Interrupt instruction – RETI – is executed.

There are basically two types of interrupts. The first type is triggered by an event that sets the Interrupt Flag. For these interrupts, the Program Counter is vectored to the actual Interrupt Vector in order to execute the interrupt handling routine, and hardware clears the corresponding Interrupt Flag. Interrupt Flags can also be cleared by writing a logic one to the flag bit position(s) to be cleared. If an interrupt condition occurs while the corresponding interrupt enable bit is cleared, the Interrupt Flag will be set and remembered until the interrupt is enabled, or the

flag is cleared by software. Similarly, if one or more interrupt conditions occur while the Global Interrupt Enable bit is cleared, the corresponding Interrupt Flag(s) will be set and remembered until the Global Interrupt Enable bit is set, and will then be executed by order of priority.

The second type of interrupts will trigger as long as the interrupt condition is present. These interrupts do not necessarily have Interrupt Flags. If the interrupt condition disappears before the interrupt is enabled, the interrupt will not be triggered.

When the AVR exits from an interrupt, it will always return to the main program and execute one more instruction before any pending interrupt is served.

Note that the Status Register is not automatically stored when entering an interrupt routine, nor restored when returning from an interrupt routine. This must be handled by software.

When using the CLI instruction to disable interrupts, the interrupts will be immediately disabled. No interrupt will be executed after the CLI instruction, even if it occurs simultaneously with the CLI instruction. The following example shows how this can be used to avoid interrupts during the timed EEPROM write sequence.

Assembly Code Example

```
in r16, SREG     ; store SREG value
cli    ; disable interrupts during timed sequence
sbi EECR, EEMPE  ; start EEPROM write
sbi EECR, EEPE
out SREG, r16    ; restore SREG value (I-bit)
```

C Code Example

```
char cSREG;
cSREG = SREG; /* store SREG value */
/* disable interrupts during timed sequence */
__disable_interrupt();
EECR |= (1<<EEMPE); /* start EEPROM write */
EECR |= (1<<EEPE);
SREG = cSREG; /* restore SREG value (I-bit) */
```

When using the SEI instruction to enable interrupts, the instruction following SEI will be executed before any pending interrupts, as shown in this example.

Assembly Code Example

```
sei  ; set Global Interrupt Enable
sleep; enter sleep, waiting for interrupt
; note: will enter sleep before any pending
; interrupt(s)
```

C Code Example

```
__enable_interrupt(); /* set Global Interrupt Enable */
__sleep(); /* enter sleep, waiting for interrupt */
/* note: will enter sleep before any pending interrupt(s) */
```

7.8.1 Interrupt Response Time

The interrupt execution response for all the enabled AVR interrupts is five clock cycles minimum. After five clock cycles the program vector address for the actual interrupt handling routine is executed. During these five clock cycle period, the Program Counter is pushed onto the Stack. The vector is normally a jump to the interrupt routine, and this jump takes three clock cycles. If an interrupt occurs during execution of a multi-cycle instruction, this instruction is completed before the interrupt is served. If an interrupt occurs when the MCU is in sleep mode, the interrupt execution response time is increased by five clock cycles. This increase comes in addition to the start-up time from the selected sleep mode.

A return from an interrupt handling routine takes five clock cycles. During these five clock cycles, the Program Counter (three bytes) is popped back from the Stack, the Stack Pointer is incremented by three, and the I-bit in SREG is set.

8. AVR Memories

This section describes the different memories in the ATmega640/1280/1281/2560/2561. The AVR architecture has two main memory spaces, the Data Memory and the Program Memory space. In addition, the ATmega640/1280/1281/2560/2561 features an EEPROM Memory for data storage. All three memory spaces are linear and regular.

8.1 In-System Reprogrammable Flash Program Memory

The ATmega640/1280/1281/2560/2561 contains 64K/128K/256K bytes On-chip In-System Reprogrammable Flash memory for program storage, see Figure 8-1. Since all AVR instructions are 16 bit or 32 bit wide, the Flash is organized as 32K/64K/128K × 16. For software security, the Flash Program memory space is divided into two sections, Boot Program section and Application Program section.

The Flash memory has an endurance of at least 10,000 write/erase cycles. The ATmega640/1280/1281/2560/2561 Program Counter (PC) is 15/16/17 bits wide, thus addressing the 32K/64K/128K program memory locations. The operation of Boot Program section and associated Boot Lock bits for software protection are described in detail in "Boot Loader Support – Read-While-Write Self-Programming" on page 310. "Memory Programming" on page 325 contains a detailed description on Flash data serial downloading using the SPI pins or the JTAG interface.

Constant tables can be allocated within the entire program memory address space (see the LPM – Load Program Memory instruction description and ELPM - Extended Load Program Memory instruction description).

Timing diagrams for instruction fetch and execution are presented in "Instruction Execution Timing" on page 16.

Figure 8-1. Program Flash Memory Map

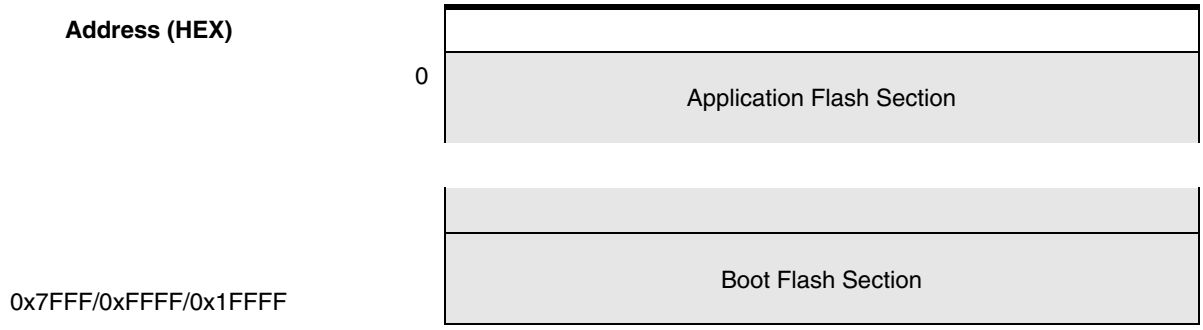

8.2 SRAM Data Memory

Figure 8-2 on page 22 shows how the ATmega640/1280/1281/2560/2561 SRAM Memory is organized.

The ATmega640/1280/1281/2560/2561 is a complex microcontroller with more peripheral units than can be supported within the 64 location reserved in the Opcode for the IN and OUT instructions. For the Extended I/O space from $060 - $1FF in SRAM, only the ST/STS/STD and LD/LDS/LDD instructions can be used.

The first 4,608/8,704 Data Memory locations address both the Register File, the I/O Memory, Extended I/O Memory, and the internal data SRAM. The first 32 locations address the Register file, the next 64 location the standard I/O Memory, then 416 locations of Extended I/O memory and the next 8,192 locations address the internal data SRAM.

An optional external data SRAM can be used with the ATmega640/1280/1281/2560/2561. This SRAM will occupy an area in the remaining address locations in the 64K address space. This area starts at the address following the internal SRAM. The Register file, I/O, Extended I/O and Internal SRAM occupies the lowest 4,608/8,704 bytes, so when using 64Kbytes (65,536 bytes) of External Memory, 60,478/56,832 Bytes of External Memory are available. See "External Memory Interface" on page 27 for details on how to take advantage of the external memory map.

When the addresses accessing the SRAM memory space exceeds the internal data memory locations, the external data SRAM is accessed using the same instructions as for the internal data memory access. When the internal data memories are accessed, the read and write strobe pins ($\overline{PG0}$ and $\overline{PG1}$) are inactive during the whole access cycle. External SRAM operation is enabled by setting the SRE bit in the XMCRA Register.

Accessing external SRAM takes one additional clock cycle per byte compared to access of the internal SRAM. This means that the commands LD, ST, LDS, STS, LDD, STD, PUSH, and POP take one additional clock cycle. If the Stack is placed in external SRAM, interrupts, subroutine calls and returns take three clock cycles extra because the three-byte program counter is pushed and popped, and external memory access does not take advantage of the internal pipe-line memory access. When external SRAM interface is used with wait-state, one-byte external access takes two, three, or four additional clock cycles for one, two, and three wait-states respectively. Interrupts, subroutine calls and returns will need five, seven, or nine clock cycles more than specified in the instruction set manual for one, two, and three wait-states.

The five different addressing modes for the data memory cover: Direct, Indirect with Displacement, Indirect, Indirect with Pre-decrement, and Indirect with Post-increment. In the Register file, registers R26 to R31 feature the indirect addressing pointer registers.

The direct addressing reaches the entire data space.

The Indirect with Displacement mode reaches 63 address locations from the base address given by the Y-register or Z-register.

When using register indirect addressing modes with automatic pre-decrement and post-increment, the address registers X, Y, and Z are decremented or incremented.

The 32 general purpose working registers, 64 I/O registers, and the 4,196/8,192 bytes of internal data SRAM in the ATmega640/1280/1281/2560/2561 are all accessible through all these addressing modes. The Register File is described in “General Purpose Register File” on page 13.

Figure 8-2. Data Memory Map

Address (HEX)	
0 - 1F	32 Registers
20 - 5F	64 I/O Registers
60 - 1FF	416 External I/O Registers
200 21FF	Internal SRAM (8192 × 8)
2200	External SRAM (0 - 64K × 8)
FFFF	

8.2.1 Data Memory Access Times

This section describes the general access timing concepts for internal memory access. The internal data SRAM access is performed in two clk_{CPU} cycles as described in Figure 8-3.

Figure 8-3. On-chip Data SRAM Access Cycles

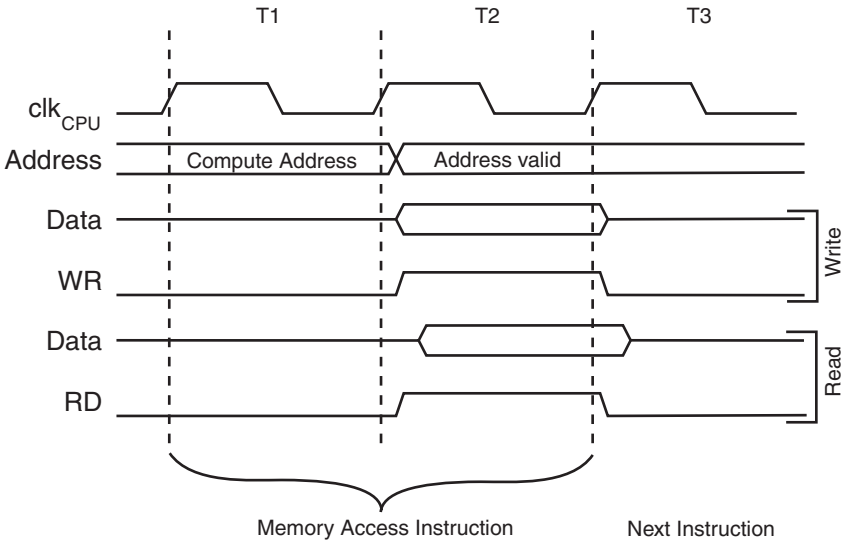

8.3 EEPROM Data Memory

The ATmega640/1280/1281/2560/2561 contains 4Kbytes of data EEPROM memory. It is organized as a separate data space, in which single bytes can be read and written. The EEPROM has an endurance of at least 100,000 write/erase cycles. The access between the EEPROM and the CPU is described in the following, specifying the EEPROM Address Registers, the EEPROM Data Register, and the EEPROM Control Register.

For a detailed description of SPI, JTAG and Parallel data downloading to the EEPROM, see "Serial Downloading" on page 338, "Programming via the JTAG Interface" on page 342, and "Programming the EEPROM" on page 333 respectively.

8.3.1 EEPROM Read/Write Access

The EEPROM Access Registers are accessible in the I/O space, see "Register Description" on page 34.

The write access time for the EEPROM is given in Table 8-1. A self-timing function, however, lets the user software detect when the next byte can be written. If the user code contains instructions that write the EEPROM, some precautions must be taken. In heavily filtered power supplies, V_{CC} is likely to rise or fall slowly on power-up/down. This causes the device for some period of time to run at a voltage lower than specified as minimum for the clock frequency used. See "Preventing EEPROM Corruption" on page 25. for details on how to avoid problems in these situations.

In order to prevent unintentional EEPROM writes, a specific write procedure must be followed. See the description of the EEPROM Control Register for details on this; "Register Description" on page 34.

When the EEPROM is read, the CPU is halted for four clock cycles before the next instruction is executed. When the EEPROM is written, the CPU is halted for two clock cycles before the next instruction is executed.

The calibrated Oscillator is used to time the EEPROM accesses. Table 8-1 lists the typical programming time for EEPROM access from the CPU.

Table 8-1. EEPROM Programming Time

Symbol	Number of Calibrated RC Oscillator Cycles	Typ Programming Time
EEPROM write (from CPU)	26,368	3.3ms

The following code examples show one assembly and one C function for writing to the EEPROM. The examples assume that interrupts are controlled (for example by disabling interrupts globally) so that no interrupts will occur during execution of these functions. The examples also assume that no Flash Boot Loader is present in the software. If such code is present, the EEPROM write function must also wait for any ongoing SPM command to finish.

Assembly Code Example[1]

```
EEPROM_write:
  ; Wait for completion of previous write
  sbic EECR,EEPE
  rjmp EEPROM_write
  ; Set up address (r18:r17) in address register
  out  EEARH, r18
  out  EEARL, r17
  ; Write data (r16) to Data Register
  out  EEDR,r16
  ; Write logical one to EEMPE
  sbi  EECR,EEMPE
  ; Start eeprom write by setting EEPE
  sbi  EECR,EEPE
  ret
```

C Code Example[1]

```
void EEPROM_write(unsigned int uiAddress, unsigned char ucData)
{
  /* Wait for completion of previous write */
  while(EECR & (1<<EEPE))
    ;
  /* Set up address and Data Registers */
  EEAR = uiAddress;
  EEDR = ucData;
  /* Write logical one to EEMPE */
  EECR |= (1<<EEMPE);
  /* Start eeprom write by setting EEPE */
  EECR |= (1<<EEPE);
}
```

Note: 1. See “About Code Examples” on page 10.

The next code examples show assembly and C functions for reading the EEPROM. The examples assume that interrupts are controlled so that no interrupts will occur during execution of these functions.

Assembly Code Example[1]

```
EEPROM_read:
  ; Wait for completion of previous write
  sbic EECR,EEPE
  rjcmp EEPROM_read
  ; Set up address (r18:r17) in address register
  out  EEARH, r18
  out  EEARL, r17
  ; Start eeprom read by writing EERE
  sbi  EECR,EERE
  ; Read data from Data Register
  in   r16,EEDR
  ret
```

C Code Example[1]

```
unsigned char EEPROM_read(unsigned int uiAddress)
{
  /* Wait for completion of previous write */
  while(EECR & (1<<EEPE))
    ;
  /* Set up address register */
  EEAR = uiAddress;
  /* Start eeprom read by writing EERE */
  EECR |= (1<<EERE);
  /* Return data from Data Register */
  return EEDR;
}
```

Note: 1. See “About Code Examples” on page 10.

8.3.2 Preventing EEPROM Corruption

During periods of low $V_{CC,}$ the EEPROM data can be corrupted because the supply voltage is too low for the CPU and the EEPROM to operate properly. These issues are the same as for board level systems using EEPROM, and the same design solutions should be applied.

An EEPROM data corruption can be caused by two situations when the voltage is too low. First, a regular write sequence to the EEPROM requires a minimum voltage to operate correctly. Secondly, the CPU itself can execute instructions incorrectly, if the supply voltage is too low.

EEPROM data corruption can easily be avoided by following this design recommendation:

Keep the AVR RESET active (low) during periods of insufficient power supply voltage. This can be done by enabling the internal Brown-out Detector (BOD). If the detection level of the internal BOD does not match the needed detection level, an external low V_{CC} reset Protection circuit can be used. If a reset occurs while a write operation is in progress, the write operation will be completed provided that the power supply voltage is sufficient.

8.4 I/O Memory

The I/O space definition of the ATmega640/1280/1281/2560/2561 is shown in “Register Summary” on page 399.

All ATmega640/1280/1281/2560/2561 I/Os and peripherals are placed in the I/O space. All I/O locations may be accessed by the LD/LDS/LDD and ST/STS/STD instructions, transferring data between the 32 general purpose working registers and the I/O space. I/O Registers within the address range 0x00 - 0x1F are directly bit-accessible using the SBI and CBI instructions. In these registers, the value of single bits can be checked by using the SBIS and SBIC instructions. Refer to the “Instruction Set Summary” on page 404 for more details. When using the I/O specific commands IN and OUT, the I/O addresses 0x00 - 0x3F must be used. When addressing I/O Registers as data space using LD and ST instructions, 0x20 must be added to these addresses. The ATmega640/1280/1281/2560/2561 is a complex microcontroller with more peripheral units than can be supported within the 64 location reserved in Opcode for the IN and OUT instructions. For the Extended I/O space from 0x60 - 0x1FF in SRAM, only the ST/STS/STD and LD/LDS/LDD instructions can be used.

For compatibility with future devices, reserved bits should be written to zero if accessed. Reserved I/O memory addresses should never be written.

Some of the Status Flags are cleared by writing a logical one to them. Note that, unlike most other AVRs, the CBI and SBI instructions will only operate on the specified bit, and can therefore be used on registers containing such Status Flags. The CBI and SBI instructions work with registers 0x00 to 0x1F only.

The I/O and peripherals control registers are explained in later sections.

8.4.1 General Purpose I/O Registers

The ATmega640/1280/1281/2560/2561 contains three General Purpose I/O Registers. These registers can be used for storing any information, and they are particularly useful for storing global variables and Status Flags. General Purpose I/O Registers within the address range 0x00 - 0x1F are directly bit-accessible using the SBI, CBI, SBIS, and SBIC instructions. See “Register Description” on page 34.

9. External Memory Interface

With all the features the External Memory Interface provides, it is well suited to operate as an interface to memory devices such as External SRAM and Flash, and peripherals such as LCD-display, A/D, and D/A. The main features are:

- **Four different wait-state settings (including no wait-state)**
- **Independent wait-state setting for different External Memory sectors (configurable sector size)**
- **The number of bits dedicated to address high byte is selectable**
- **Bus keepers on data lines to minimize current consumption (optional)**

9.1 Overview

When the eXternal MEMory (XMEM) is enabled, address space outside the internal SRAM becomes available using the dedicated External Memory pins (see Figure 1-3 on page 4, Table 13-3 on page 75, Table 13-9 on page 79, and Table 13-21 on page 86). The memory configuration is shown in Figure 9-1.

Figure 9-1. External Memory with Sector Select

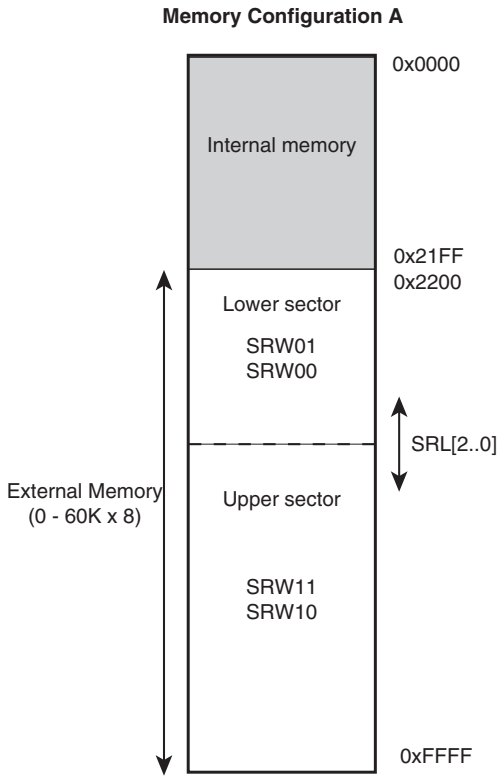

9.1.1 Using the External Memory Interface

The interface consists of:

- AD7:0: Multiplexed low-order address bus and data bus
  A15:8: High-order address bus (configurable number of bits)
- ALE: Address latch enable
- $\overline{\text{RD}}$: Read strobe
- $\overline{\text{WR}}$: Write strobe

The control bits for the External Memory Interface are located in two registers, the External Memory Control Register A – XMCRA, and the External Memory Control Register B – XMCRB.

When the XMEM interface is enabled, the XMEM interface will override the setting in the data direction registers that corresponds to the ports dedicated to the XMEM interface. For details about the port override, see the alternate functions in section "I/O-Ports" on page 67. The XMEM interface will auto-detect whether an access is internal or external. If the access is external, the XMEM interface will output address, data, and the control signals on the ports according to Figure 9-3 on page 29 (this figure shows the wave forms without wait-states). When ALE goes from high-to-low, there is a valid address on AD7:0. ALE is low during a data transfer. When the XMEM interface is enabled, also an internal access will cause activity on address, data and ALE ports, but the $\overline{RD}$ and $\overline{WR}$ strobes will not toggle during internal access. When the External Memory Interface is disabled, the normal pin and data direction settings are used. Note that when the XMEM interface is disabled, the address space above the internal SRAM boundary is not mapped into the internal SRAM. Figure 9-2 illustrates how to connect an external SRAM to the AVR using an octal latch (typically "74 × 573" or equivalent) which is transparent when G is high.

9.1.2 Address Latch Requirements

Due to the high-speed operation of the XRAM interface, the address latch must be selected with care for system frequencies above 8MHz @ 4V and 4MHz @ 2.7V. When operating at conditions above these frequencies, the typical old style 74HC series latch becomes inadequate. The External Memory Interface is designed in compliance to the 74AHC series latch. However, most latches can be used as long they comply with the main timing parameters. The main parameters for the address latch are:

- D to Q propagation delay (t_{PD})
- Data setup time before G low (t_{SU})
- Data (address) hold time after G low ($_{TH}$)

The External Memory Interface is designed to guaranty minimum address hold time after G is asserted low of t_h = 5ns. Refer to t_{LAXX_LD}/t_{LLAXX_ST} in "External Data Memory Timing" Tables 31-11 through Tables 31-18 on pages 367 - 370. The D-to-Q propagation delay (t_{PD}) must be taken into consideration when calculating the access time requirement of the external component. The data setup time before G low (t_{SU}) must not exceed address valid to ALE low (t_{AVLLC}) minus PCB wiring delay (dependent on the capacitive load).

Figure 9-2. External SRAM Connected to the AVR

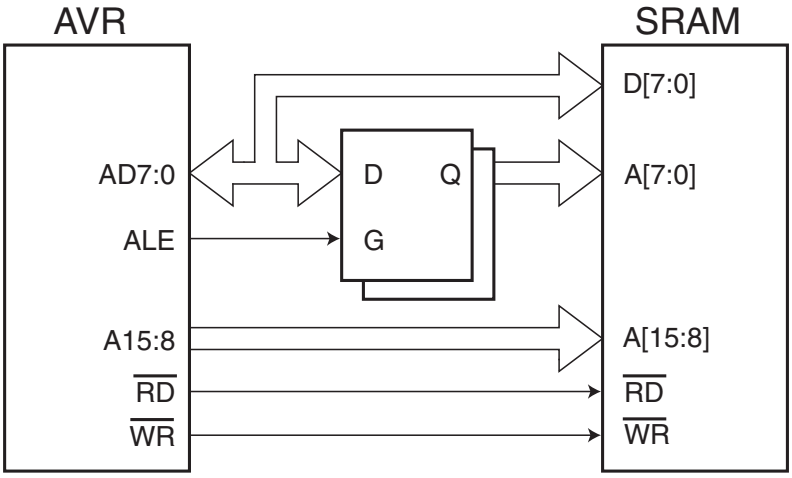

9.1.3 Pull-up and Bus-keeper

The pull-ups on the AD7:0 ports may be activated if the corresponding Port register is written to one. To reduce power consumption in sleep mode, it is recommended to disable the pull-ups by writing the Port register to zero before entering sleep.

The XMEM interface also provides a bus-keeper on the AD7:0 lines. The bus-keeper can be disabled and enabled in software as described in "XMCRB – External Memory Control Register B" on page 38. When enabled, the bus-keeper will keep the previous value on the AD7:0 bus while these lines are tri-stated by the XMEM interface.

9.1.4 Timing

External Memory devices have different timing requirements. To meet these requirements, the XMEM interface provides four different wait-states as shown in Table 9-3 on page 37. It is important to consider the timing specification of the External Memory device before selecting the wait-state. The most important parameters are the access time for the external memory compared to the set-up requirement. The access time for the External Memory is defined to be the time from receiving the chip select/address until the data of this address actually is driven on the bus. The access time cannot exceed the time from the ALE pulse must be asserted low until data is stable during a read sequence (see t_{LLRL}+ t_{RLRH} - t_{DVRH} in Tables 31-11 through Tables 31-18 on pages 367 - 370). The different wait-states are set up in software. As an additional feature, it is possible to divide the external memory space in two sectors with individual wait-state settings. This makes it possible to connect two different memory devices with different timing requirements to the same XMEM interface. For XMEM interface timing details, refer to Table 31-11 on page 367 to Table 31-18 on page 370 and Figure 31-9 on page 370 to Figure 31-12 on page 372 in the "External Data Memory Timing" on page 367.

Note that the XMEM interface is asynchronous and that the waveforms in the following figures are related to the internal system clock. The skew between the internal and external clock (XTAL1) is not guarantied (varies between devices temperature, and supply voltage). Consequently, the XMEM interface is not suited for synchronous operation.

Figure 9-3. External Data Memory Cycles without Wait-state (SRWn1=0 and SRWn0=0)[1]

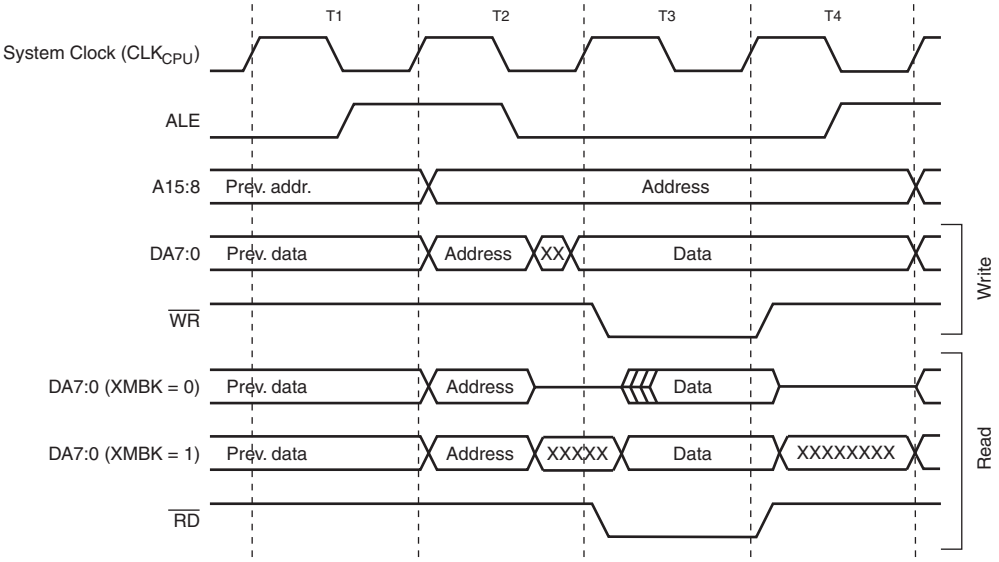

Note: 1. SRWn1 = SRW11 (upper sector) or SRW01 (lower sector), SRWn0 = SRW10 (upper sector) or SRW00 (lower sector). The ALE pulse in period T4 is only present if the next instruction accesses the RAM (internal or external).

Figure 9-4. External Data Memory Cycles with SRWn1 = 0 and SRWn0 = 1[1]

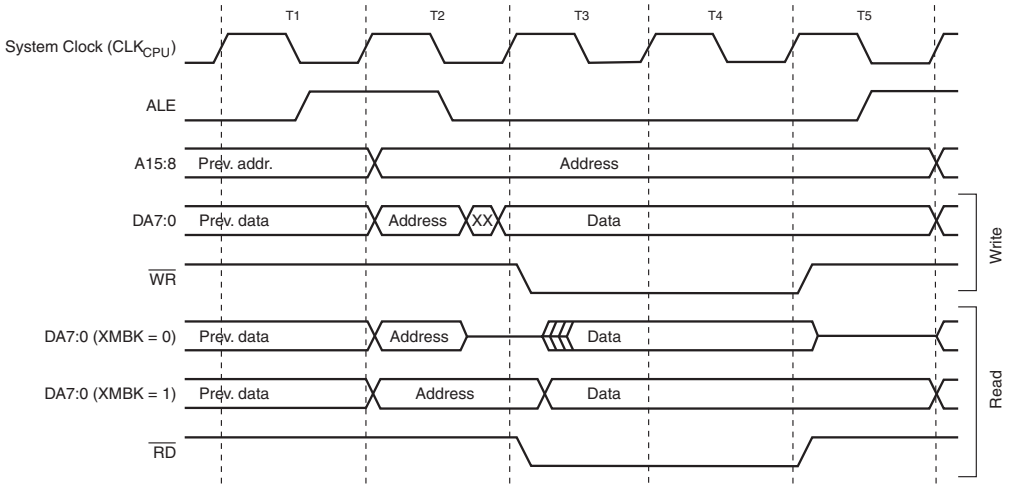

Note: 1. SRWn1 = SRW11 (upper sector) or SRW01 (lower sector), SRWn0 = SRW10 (upper sector) or SRW00 (lower sector).
The ALE pulse in period T5 is only present if the next instruction accesses the RAM (internal or external).

Figure 9-5. External Data Memory Cycles with SRWn1 = 1 and SRWn0 = 0[1]

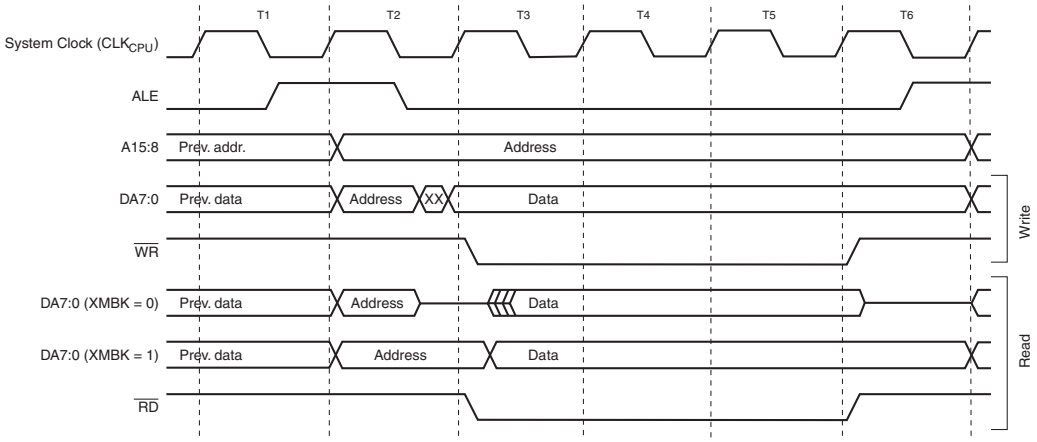

Note: 1. SRWn1 = SRW11 (upper sector) or SRW01 (lower sector), SRWn0 = SRW10 (upper sector) or SRW00 (lower sector).
The ALE pulse in period T6 is only present if the next instruction accesses the RAM (internal or external).

Figure 9-6. External Data Memory Cycles with SRWn1 = 1 and SRWn0 = 1[1]

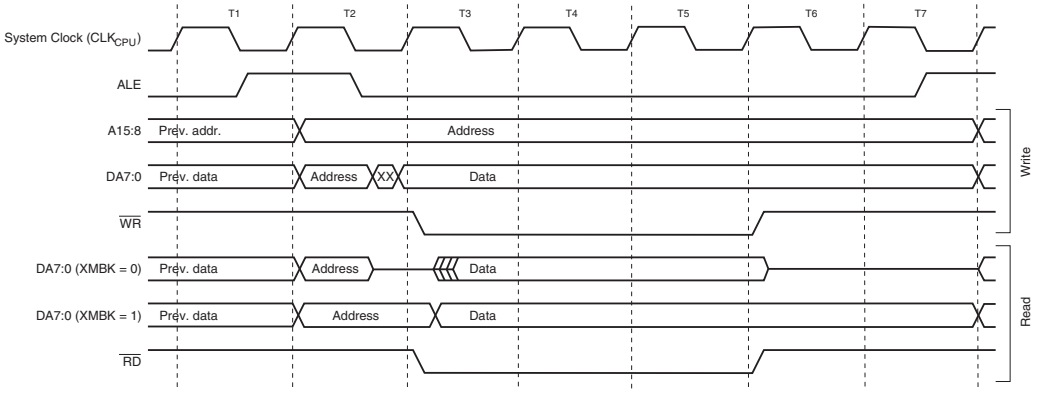

Note: 1. SRWn1 = SRW11 (upper sector) or SRW01 (lower sector), SRWn0 = SRW10 (upper sector) or SRW00 (lower sector).
The ALE pulse in period T7 is only present if the next instruction accesses the RAM (internal or external).

9.1.5 Using all Locations of External Memory Smaller than 64Kbytes

Since the external memory is mapped after the internal memory as shown in Figure 9-1 on page 27, the external memory is not addressed when addressing the first 8,704 bytes of data space. It may appear that the first 8,704 bytes of the external memory are inaccessible (external memory addresses 0x0000 to 0x21FF). However, when connecting an external memory smaller than 64Kbytes, for example 32Kbytes, these locations are easily accessed simply by addressing from address 0x8000 to 0xA1FF. Since the External Memory Address bit A15 is not connected to the external memory, addresses 0x8000 to 0xA1FF will appear as addresses 0x0000 to 0x21FF for the external memory. Addressing above address 0xA1FF is not recommended, since this will address an external memory location that is already accessed by another (lower) address. To the Application software, the external 32Kbytes memory will appear as one linear 32Kbytes address space from 0x2200 to 0xA1FF. This is illustrated in Figure 9-7.

Figure 9-7. Address Map with 32Kbytes External Memory

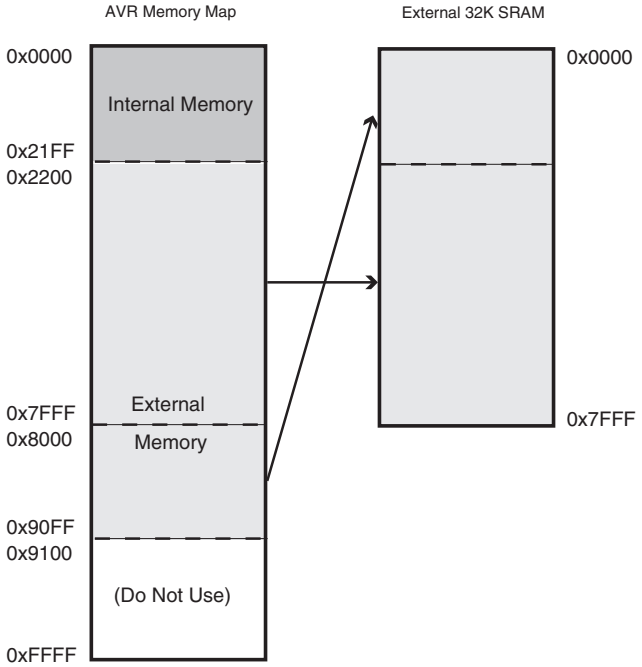

9.1.6 Using all 64Kbytes Locations of External Memory

Since the External Memory is mapped after the Internal Memory as shown in Figure 9-1 on page 27, only 56Kbytes of External Memory is available by default (address space 0x0000 to 0x21FF is reserved for internal memory). However, it is possible to take advantage of the entire External Memory by masking the higher address bits to zero. This can be done by using the XMMn bits and control by software the most significant bits of the address. By setting Port C to output 0x00, and releasing the most significant bits for normal Port Pin operation, the Memory Interface will address 0x0000 - 0x2FFF. See the following code examples.

Care must be exercised using this option as most of the memory is masked away.

Assembly Code Example[1]

```
; OFFSET is defined to 0x4000 to ensure
; external memory access
; Configure Port C (address high byte) to
; output 0x00 when the pins are released
; for normal Port Pin operation
ldi  r16, 0xFF
out  DDRC, r16
ldi  r16, 0x00
out  PORTC, r16
; release PC7:6
ldi  r16, (1<<XMM1)
sts  XMCRB, r16
; write 0xAA to address 0x0001 of external
; memory
ldi  r16, 0xaa
sts  0x0001+OFFSET, r16
; re-enable PC7:6 for external memory
ldi  r16, (0<<XMM1)
sts  XMCRB, r16
; store 0x55 to address (OFFSET + 1) of
; external memory
ldi  r16, 0x55
sts  0x0001+OFFSET, r16
```

C Code Example[1]

```
#define OFFSET 0x4000

void XRAM_example(void)
{
  unsigned char *p = (unsigned char *) (OFFSET + 1);

  DDRC = 0xFF;
  PORTC = 0x00;

  XMCRB = (1<<XMM1);

  *p = 0xaa;

  XMCRB = 0x00;

  *p = 0x55;
}
```

Note: 1. See “About Code Examples” on page 10.

9.2 Register Description

9.2.1 EEPROM registers

9.2.1.1 EEARH and EEARL – The EEPROM Address Register

Bit	15	14	13	12	11	10	9	8	
0x22 (0x42)	–	–	–	–	EEAR11	EEAR10	EEAR9	EEAR8	EEARH
0x21 (0x41)	EEAR7	EEAR6	EEAR5	EEAR4	EEAR3	EEAR2	EEAR1	EEAR0	EEARL
	7	6	5	4	3	2	1	0	
Read/Write	R	R	R	R	R/W	R/W	R/W	R/W	
	R/W	R/W	R/W	R/W	R/W	R/W	R/W	R/W	
Initial Value	0	0	0	0	X	X	X	X	
	X	X	X	X	X	X	X	X	

- **Bits 15:12 – Res: Reserved Bits**

These bits are reserved bits and will always read as zero.

- **Bits 11:0 – EEAR8:0: EEPROM Address**

The EEPROM Address Registers – EEARH and EEARL specify the EEPROM address in the 4Kbytes EEPROM space. The EEPROM data bytes are addressed linearly between 0 and 4096. The initial value of EEAR is undefined. A proper value must be written before the EEPROM may be accessed.

9.2.1.2 EEDR – The EEPROM Data Register

Bit	7	6	5	4	3	2	1	0	
0x20 (0x40)	MSB							LSB	EEDR
Read/Write	R/W	R/W	R/W	R/W	R/W	R/W	R/W	R/W	
Initial Value	0	0	0	0	0	0	0	0	

- **Bits 7:0 – EEDR7:0: EEPROM Data**

For the EEPROM write operation, the EEDR Register contains the data to be written to the EEPROM in the address given by the EEAR Register. For the EEPROM read operation, the EEDR contains the data read out from the EEPROM at the address given by EEAR.

9.2.1.3 EECR – The EEPROM Control Register

Bit	7	6	5	4	3	2	1	0	
0x1F (0x3F)	–	–	EEPM1	EEPM0	EERIE	EEMPE	EEPE	EERE	EECR
Read/Write	R	R	R/W	R/W	R/W	R/W	R/W	R/W	
Initial Value	0	0	X	X	0	0	X	0	

- **Bits 7:6 – Res: Reserved Bits**

These bits are reserved bits and will always read as zero.

- **Bits 5, 4 – EEPM1 and EEPM0: EEPROM Programming Mode Bits**

The EEPROM Programming mode bit setting defines which programming action that will be triggered when writing EEPE. It is possible to program data in one atomic operation (erase the old value and program the new value) or to split the Erase and Write operations in two different operations. The Programming times for the different modes are shown in Table 9-1 on page 35. While EEPE is set, any write to EEPMn will be ignored. During reset, the EEPMn bits will be reset to 0b00 unless the EEPROM is busy programming.

Table 9-1. EEPROM Mode Bits

EEPM1	EEPM0	Programming Time	Operation
0	0	3.4ms	Erase and Write in one operation (Atomic Operation)
0	1	1.8ms	Erase only
1	0	1.8ms	Write only
1	1	–	Reserved for future use

- **Bit 3 – EERIE: EEPROM Ready Interrupt Enable**

Writing EERIE to one enables the EEPROM Ready Interrupt if the I bit in SREG is set. Writing EERIE to zero disables the interrupt. The EEPROM Ready interrupt generates a constant interrupt when EEPE is cleared.

- **Bit 2 – EEMPE: EEPROM Master Programming Enable**

The EEMPE bit determines whether setting EEPE to one causes the EEPROM to be written. When EEMPE is set, setting EEPE within four clock cycles will write data to the EEPROM at the selected address If EEMPE is zero, setting EEPE will have no effect. When EEMPE has been written to one by software, hardware clears the bit to zero after four clock cycles. See the description of the EEPE bit for an EEPROM write procedure.

- **Bit 1 – EEPE: EEPROM Programming Enable**

The EEPROM Write Enable Signal EEPE is the write strobe to the EEPROM. When address and data are correctly set up, the EEPE bit must be written to one to write the value into the EEPROM. The EEMPE bit must be written to one before a logical one is written to EEPE, otherwise no EEPROM write takes place. The following procedure should be followed when writing the EEPROM (the order of steps 3 and 4 is not essential):

1. Wait until EEPE becomes zero.
2. Wait until SPMEN in SPMCSR becomes zero.
3. Write new EEPROM address to EEAR (optional).
4. Write new EEPROM data to EEDR (optional).
5. Write a logical one to the EEMPE bit while writing a zero to EEPE in EECR.
6. Within four clock cycles after setting EEMPE, write a logical one to EEPE.

The EEPROM can not be programmed during a CPU write to the Flash memory. The software must check that the Flash programming is completed before initiating a new EEPROM write. Step 2 is only relevant if the software contains a Boot Loader allowing the CPU to program the Flash. If the Flash is never being updated by the CPU, step 2 can be omitted. See “Memory Programming” on page 325 for details about Boot programming.

Caution: An interrupt between step 5 and step 6 will make the write cycle fail, since the EEPROM Master Write Enable will time-out. If an interrupt routine accessing the EEPROM is interrupting another EEPROM access, the EEAR or EEDR Register will be modified, causing the interrupted EEPROM access to fail. It is recommended to have the Global Interrupt Flag cleared during all the steps to avoid these problems.

When the write access time has elapsed, the EEPE bit is cleared by hardware. The user software can poll this bit and wait for a zero before writing the next byte. When EEPE has been set, the CPU is halted for two cycles before the next instruction is executed.

- **Bit 0 – EERE: EEPROM Read Enable**

The EEPROM Read Enable Signal EERE is the read strobe to the EEPROM. When the correct address is set up in the EEAR Register, the EERE bit must be written to a logic one to trigger the EEPROM read. The EEPROM read access takes one instruction, and the requested data is available immediately. When the EEPROM is read, the CPU is halted for four cycles before the next instruction is executed.

The user should poll the EEPE bit before starting the read operation. If a write operation is in progress, it is neither possible to read the EEPROM, nor to change the EEAR Register.

9.3 General Purpose registers

9.3.1 GPIOR2 – General Purpose I/O Register 2

Bit	7	6	5	4	3	2	1	0	
0x2B (0x4B)	MSB							LSB	GPIOR2
Read/Write	R/W	R/W	R/W	R/W	R/W	R/W	R/W	R/W	
Initial Value	0	0	0	0	0	0	0	0	

9.3.2 GPIOR1 – General Purpose I/O Register 1

Bit	7	6	5	4	3	2	1	0	
0x2A (0x4A)	MSB							LSB	GPIOR1
Read/Write	R/W	R/W	R/W	R/W	R/W	R/W	R/W	R/W	
Initial Value	0	0	0	0	0	0	0	0	

9.3.3 GPIOR0 – General Purpose I/O Register 0

Bit	7	6	5	4	3	2	1	0	
0x1E (0x3E)	MSB							LSB	GPIOR0
Read/Write	R/W	R/W	R/W	R/W	R/W	R/W	R/W	R/W	
Initial Value	0	0	0	0	0	0	0	0	

9.4 External Memory registers

9.4.1 XMCRA – External Memory Control Register A

Bit	7	6	5	4	3	2	1	0	
“(0x74)”	SRE	SRL2	SRL1	SRL0	SRW11	SRW10	SRW01	SRW00	XMCRA
Read/Write	R/W	R/W	R/W	R/W	R/W	R/W	R/W	R/W	
Initial Value	0	0	0	0	0	0	0	0	

- **Bit 7 – SRE: External SRAM/XMEM Enable**

Writing SRE to one enables the External Memory Interface.The pin functions AD7:0, A15:8, ALE, $\overline{WR}$, and $\overline{RD}$ are activated as the alternate pin functions. The SRE bit overrides any pin direction settings in the respective data direction registers. Writing SRE to zero, disables the External Memory Interface and the normal pin and data direction settings are used.

- **Bit 6:4 – SRL2:0: Wait-state Sector Limit**

It is possible to configure different wait-states for different External Memory addresses. The external memory address space can be divided in two sectors that have separate wait-state bits. The SRL2, SRL1, and SRL0 bits select the split of the sectors, see Table 9-2 on page 37 and Figure 9-1 on page 27. By default, the SRL2, SRL1, and SRL0 bits are set to zero and the entire external memory address space is treated as one sector. When the entire SRAM address space is configured as one sector, the wait-states are configured by the SRW11 and SRW10 bits.

Table 9-2. Sector limits with different settings of SRL2:0

SRL2	SRL1	SRL0	Sector Limits
0	0	x	Lower sector = N/A Upper sector = 0x2200 - 0xFFFF
0	1	0	Lower sector = 0x2200 - 0x3FFF Upper sector = 0x4000 - 0xFFFF
0	1	1	Lower sector = 0x2200 - 0x5FFF Upper sector = 0x6000 - 0xFFFF
1	0	0	Lower sector = 0x2200 - 0x7FFF Upper sector = 0x8000 - 0xFFFF
1	0	1	Lower sector = 0x2200 - 0x9FFF Upper sector = 0xA000 - 0xFFFF
1	1	0	Lower sector = 0x2200 - 0xBFFF Upper sector = 0xC000 - 0xFFFF
1	1	1	Lower sector = 0x2200 - 0xDFFF Upper sector = 0xE000 - 0xFFFF

- **Bit 3:2 – SRW11, SRW10: Wait-state Select Bits for Upper Sector**

The SRW11 and SRW10 bits control the number of wait-states for the upper sector of the external memory address space, see Table 9-3.

- **Bit 1:0 – SRW01, SRW00: Wait-state Select Bits for Lower Sector**

The SRW01 and SRW00 bits control the number of wait-states for the lower sector of the external memory address space, see Table 9-3.

Table 9-3. Wait States[1]

SRWn1	SRWn0	Wait States
0	0	No wait-states
0	1	Wait one cycle during read/write strobe
1	0	Wait two cycles during read/write strobe
1	1	Wait two cycles during read/write and wait one cycle before driving out new address

Note: 1. n = 0 or 1 (lower/upper sector).
For further details of the timing and wait-states of the External Memory Interface, see Figure 9-3 on page 29 through Figure 9-6 on page 31 for how the setting of the SRW bits affects the timing.

9.4.2 XMCRB – External Memory Control Register B

Bit	7	6	5	4	3	2	1	0	
(0x75)	**XMBK**	**–**	**–**	**–**	**–**	**XMM2**	**XMM1**	**XMM0**	**XMCRB**
Read/Write	R/W	R	R	R	R	R/W	R/W	R/W	
Initial Value	0	0	0	0	0	0	0	0	

- **Bit 7– XMBK: External Memory Bus-keeper Enable**

Writing XMBK to one enables the bus keeper on the AD7:0 lines. When the bus keeper is enabled, AD7:0 will keep the last driven value on the lines even if the XMEM interface has tri-stated the lines. Writing XMBK to zero disables the bus keeper. XMBK is not qualified with SRE, so even if the XMEM interface is disabled, the bus keepers are still activated as long as XMBK is one.

- **Bit 6:3 – Res: Reserved Bits**

These bits are reserved and will always read as zero. When writing to this address location, write these bits to zero for compatibility with future devices.

- **Bit 2:0 – XMM2, XMM1, XMM0: External Memory High Mask**

When the External Memory is enabled, all Port C pins are default used for the high address byte. If the full 60Kbytes address space is not required to access the External Memory, some, or all, Port C pins can be released for normal Port Pin function as described in Table 9-4. As described in "Using all 64Kbytes Locations of External Memory" on page 32, it is possible to use the XMMn bits to access all 64Kbytes locations of the External Memory.

Table 9-4. Port C Pins Released as Normal Port Pins when the External Memory is Enabled

XMM2	XMM1	XMM0	# Bits for External Memory Address	Released Port Pins
0	0	0	8 (Full 56Kbytes space)	None
0	0	1	7	PC7
0	1	0	6	PC7 - PC6
0	1	1	5	PC7 - PC5
1	0	0	4	PC7 - PC4
1	0	1	3	PC7 - PC3
1	1	0	2	PC7 - PC2
1	1	1	No Address high bits	Full Port C

10. System Clock and Clock Options

This section describes the clock options for the AVR microcontroller.

10.1 Overview

Figure 10-1 presents the principal clock systems in the AVR and their distribution. All of the clocks need not be active at a given time. In order to reduce power consumption, the clocks to modules not being used can be halted by using different sleep modes, as described in "Power Management and Sleep Modes" on page 50. The clock systems are detailed below.

Figure 10-1. Clock Distribution.

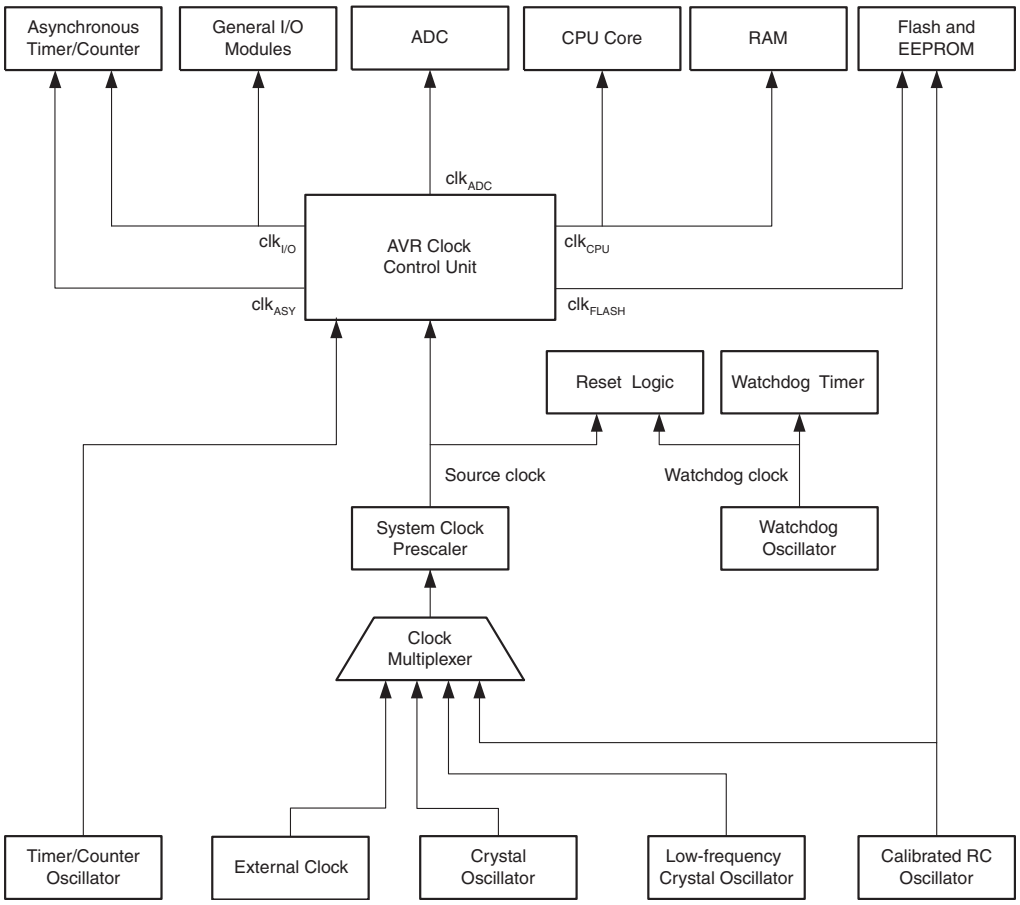

10.2 Clock Systems and their Distribution

10.2.1 CPU Clock – clk_{CPU}

The CPU clock is routed to parts of the system concerned with operation of the AVR core. Examples of such modules are the General Purpose Register File, the Status Register and the data memory holding the Stack Pointer. Halting the CPU clock inhibits the core from performing general operations and calculations.

10.2.2 I/O Clock – $clk_{I/O}$

The I/O clock is used by the majority of the I/O modules, like Timer/Counters, SPI, and USART. The I/O clock is also used by the External Interrupt module, but note that some external interrupts are detected by asynchronous logic, allowing such interrupts to be detected even if the I/O clock is halted. Also note that start condition detection in the USI module is carried out asynchronously when $clk_{I/O}$ is halted, TWI address recognition in all sleep modes.

10.2.3 Flash Clock – clk_{FLASH}

The Flash clock controls operation of the Flash interface. The Flash clock is usually active simultaneously with the CPU clock.

10.2.4 Asynchronous Timer Clock – clk_{ASY}

The Asynchronous Timer clock allows the Asynchronous Timer/Counter to be clocked directly from an external clock or an external 32kHz clock crystal. The dedicated clock domain allows using this Timer/Counter as a real-time counter even when the device is in sleep mode.

10.2.5 ADC Clock – clk_{ADC}

The ADC is provided with a dedicated clock domain. This allows halting the CPU and I/O clocks in order to reduce noise generated by digital circuitry. This gives more accurate ADC conversion results.

10.3 Clock Sources

The device has the following clock source options, selectable by Flash Fuse bits as shown below. The clock from the selected source is input to the AVR clock generator, and routed to the appropriate modules.

Table 10-1. Device Clocking Options Select[(1)]

Device Clocking Option	CKSEL3:0
Low Power Crystal Oscillator	1111 - 1000
Full Swing Crystal Oscillator	0111 - 0110
Low Frequency Crystal Oscillator	0101 - 0100
Internal 128kHz RC Oscillator	0011
Calibrated Internal RC Oscillator	0010
External Clock	0000
Reserved	0001

Note: 1. For all fuses “1” means unprogrammed while “0” means programmed.

10.3.1 Default Clock Source

The device is shipped with internal RC oscillator at 8.0MHz and with the fuse CKDIV8 programmed, resulting in 1.0MHz system clock. The startup time is set to maximum and time-out period enabled. (CKSEL = "0010", SUT = "10", CKDIV8 = "0"). The default setting ensures that all users can make their desired clock source setting using any available programming interface.

10.3.2 Clock Start-up Sequence

Any clock source needs a sufficient V_{CC} to start oscillating and a minimum number of oscillating cycles before it can be considered stable.

To ensure sufficient V_{CC}, the device issues an internal reset with a time-out delay (t_{TOUT}) after the device reset is released by all other reset sources. “On-chip Debug System” on page 53 describes the start conditions for the internal reset. The delay (t_{TOUT}) is timed from the Watchdog Oscillator and the number of cycles in the delay is set by the SUTx and CKSELx fuse bits. The selectable delays are shown in Table 10-2 on page 41. The frequency of the Watchdog Oscillator is voltage dependent as shown in “Typical Characteristics” on page 373.

Table 10-2. Number of Watchdog Oscillator Cycles

Typical Time-out (V_{CC} = 5.0V)	Typical Time-out (V_{CC} = 3.0V)	Number of Cycles
0ms	0ms	0
4.1ms	4.3ms	512
65ms	69ms	8K (8,192)

Main purpose of the delay is to keep the AVR in reset until it is supplied with minimum V_{CC}. The delay will not monitor the actual voltage and it will be required to select a delay longer than the V_{CC} rise time. If this is not possible, an internal or external Brown-Out Detection circuit should be used. A BOD circuit will ensure sufficient V_{CC} before it releases the reset, and the time-out delay can be disabled. Disabling the time-out delay without utilizing a Brown-Out Detection circuit is not recommended.

The oscillator is required to oscillate for a minimum number of cycles before the clock is considered stable. An internal ripple counter monitors the oscillator output clock, and keeps the internal reset active for a given number of clock cycles. The reset is then released and the device will start to execute. The recommended oscillator start-up time is dependent on the clock type, and varies from 6 cycles for an externally applied clock to 32K cycles for a low frequency crystal.

The start-up sequence for the clock includes both the time-out delay and the start-up time when the device starts up from reset. When starting up from Power-save or Power-down mode, V_{CC} is assumed to be at a sufficient level and only the start-up time is included.

10.4 Low Power Crystal Oscillator

Pins XTAL1 and XTAL2 are input and output, respectively, of an inverting amplifier which can be configured for use as an On-chip Oscillator, as shown in Figure 10-2. Either a quartz crystal or a ceramic resonator may be used.

This Crystal Oscillator is a low power oscillator, with reduced voltage swing on the XTAL2 output. It gives the lowest power consumption, but is not capable of driving other clock inputs, and may be more susceptible to noise in noisy environments. In these cases, refer to the "Full Swing Crystal Oscillator" on page 42.

C1 and C2 should always be equal for both crystals and resonators. The optimal value of the capacitors depends on the crystal or resonator in use, the amount of stray capacitance, and the electromagnetic noise of the environment. Some initial guidelines for choosing capacitors for use with crystals are given in Table 10-3 on page 42. For ceramic resonators, the capacitor values given by the manufacturer should be used.

Figure 10-2. Crystal Oscillator Connections

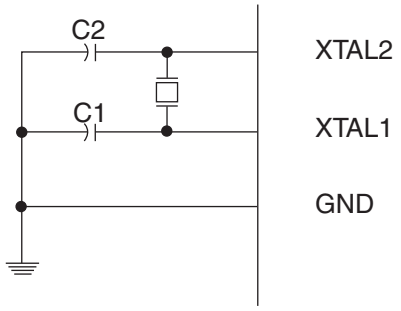

The Low Power Oscillator can operate in three different modes, each optimized for a specific frequency range. The operating mode is selected by the fuses CKSEL3:1 as shown in Table 10-3 on page 42.

Table 10-3. Low Power Crystal Oscillator Operating Modes[3]

Frequency Range [MHz]	CKSEL3:1[1]	Recommended Range for Capacitors C1 and C2 [pF]
0.4 - 0.9	100[2]	–
0.9 - 3.0	101	12 - 22
3.0 - 8.0	110	12 - 22
8.0 - 16.0[4]	111	12 - 22

Notes:
1. This is the recommended CKSEL settings for the different frequency ranges.
2. This option should not be used with crystals, only with ceramic resonators.
3. If 8MHz frequency exceeds the specification of the device (depends on V_{CC}), the CKDIV8 Fuse can be programmed in order to divide the internal frequency by 8. It must be ensured that the resulting divided clock meets the frequency specification of the device.
4. Maximum frequency when using ceramic oscillator is 10MHz.

The CKSEL0 Fuse together with the SUT1:0 Fuses select the start-up times as shown in Table 10-4.

Table 10-4. Start-up Times for the Low Power Crystal Oscillator Clock Selection

Oscillator Source / Power Conditions	Start-up Time from Power-down and Power-save	Additional Delay from Reset (V_{CC} = 5.0V)	CKSEL0	SUT1:0
Ceramic resonator, fast rising power	258CK	14CK + 4.1ms[1]	0	00
Ceramic resonator, slowly rising power	258CK	14CK + 65ms[1]	0	01
Ceramic resonator, BOD enabled	1KCK	14CK[2]	0	10
Ceramic resonator, fast rising power	1KCK	14CK + 4.1ms[2]	0	11
Ceramic resonator, slowly rising power	1KCK	14CK + 65ms[2]	1	00
Crystal Oscillator, BOD enabled	16KCK	14CK	1	01
Crystal Oscillator, fast rising power	16KCK	14CK + 4.1ms	1	10
Crystal Oscillator, slowly rising power	16KCK	14CK + 65ms	1	11

Notes:
1. These options should only be used when not operating close to the maximum frequency of the device, and only if frequency stability at start-up is not important for the application. These options are not suitable for crystals.
2. These options are intended for use with ceramic resonators and will ensure frequency stability at start-up. They can also be used with crystals when not operating close to the maximum frequency of the device, and if frequency stability at start-up is not important for the application.

10.5 Full Swing Crystal Oscillator

Pins XTAL1 and XTAL2 are input and output, respectively, of an inverting amplifier which can be configured for use as an On-chip Oscillator, as shown in Figure 10-2 on page 41. Either a quartz crystal or a ceramic resonator may be used.

This Crystal Oscillator is a full swing oscillator, with rail-to-rail swing on the XTAL2 output. This is useful for driving other clock inputs and in noisy environments. The current consumption is higher than the "Low Power Crystal Oscillator" on page 41. Note that the Full Swing Crystal Oscillator will only operate for V_{CC} = 2.7 - 5.5 volts.

C1 and C2 should always be equal for both crystals and resonators. The optimal value of the capacitors depends on the crystal or resonator in use, the amount of stray capacitance, and the electromagnetic noise of the environment. Some initial guidelines for choosing capacitors for use with crystals are given in Table 10-6 on page 43. For ceramic resonators, the capacitor values given by the manufacturer should be used.

The operating mode is selected by the fuses CKSEL3:1 as shown in Table 10-5 on page 43.

Table 10-5. Full Swing Crystal Oscillator operating modes[1]

Frequency Range [MHz]	CKSEL3:1	Recommended Range for Capacitors C1 and C2 [pF]
0.4 - 16	011	12 - 22

Note: 1. If 8MHz frequency exceeds the specification of the device (depends on V_{CC}), the CKDIV8 Fuse can be programmed in order to divide the internal frequency by 8. It must be ensured that the resulting divided clock meets the frequency specification of the device.

Table 10-6. Start-up Times for the Full Swing Crystal Oscillator Clock Selection

Oscillator Source / Power Conditions	Start-up Time from Power-down and Power-save	Additional Delay from Reset (V_{CC} = 5.0V)	CKSEL0	SUT1:0
Ceramic resonator, fast rising power	258 CK	14CK + 4.1ms[1]	0	00
Ceramic resonator, slowly rising power	258 CK	14CK + 65ms[1]	0	01
Ceramic resonator, BOD enabled	1K CK	14CK[2]	0	10
Ceramic resonator, fast rising power	1K CK	14CK + 4.1ms[2]	0	11
Ceramic resonator, slowly rising power	1K CK	14CK + 65ms[2]	1	00
Crystal Oscillator, BOD enabled	16K CK	14CK	1	01
Crystal Oscillator, fast rising power	16K CK	14CK + 4.1ms	1	10
Crystal Oscillator, slowly rising power	16K CK	14CK + 65ms	1	11

Notes: 1. These options should only be used when not operating close to the maximum frequency of the device, and only if frequency stability at start-up is not important for the application. These options are not suitable for crystals.
2. These options are intended for use with ceramic resonators and will ensure frequency stability at start-up. They can also be used with crystals when not operating close to the maximum frequency of the device, and if frequency stability at start-up is not important for the application.

10.6 Low Frequency Crystal Oscillator

The device can utilize a 32.768kHz watch crystal as clock source by a dedicated Low Frequency Crystal Oscillator. The crystal should be connected as shown in Figure 10-3 on page 44. When this Oscillator is selected, start-up times are determined by the SUT Fuses and CKSEL0 as shown in Table 10-8 on page 44.

The Low-Frequency Crystal Oscillator provides an internal load capacitance, see Table 10-7 at each XTAL/TOSC pin.

Table 10-7. Capacitance for Low frequency oscillator

Device	32kHz oscillator	Cap (Xtal1/Tosc1)	Cap (Xtal2/Tosc2)
ATmega640/1280/1281/2560/2561	System Osc.	18pF	8pF
	Timer Osc.	6pF	6pF

The capacitance (Ce + Ci) needed at each XTAL/TOSC pin can be calculated by using:

$$Ce + Ci = 2 * CL - C_s$$

where:

Ce - is optional external capacitors as described in Figure 10-3.

Ci - is the pin capacitance in Table 10-7 on page 43.

CL - is the load capacitance for a 32.768kHz crystal specified by the crystal vendor.

C_S - is the total stray capacitance for one XTAL/TOSC pin.

Crystals specifying load capacitance (CL) higher than the ones given in the Table 10-7 on page 43, require external capacitors applied as described in Figure 10-3.

Figure 10-3. Crystal Oscillator Connections

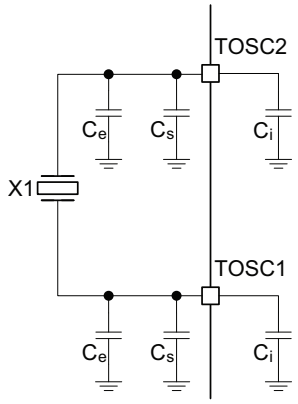

To find suitable load capacitance for a 32.768kHz crystal, consult the crystal datasheet.

When this oscillator is selected, start-up times are determined by the SUT Fuses and CKSEL0 as shown in Table 10-8.

Table 10-8. Start-up times for the low frequency crystal oscillator clock selection

Power Conditions	Start-up Time from Power-down and Power-save	Additional Delay from Reset (V_{CC} = 5.0V)	CKSEL0	SUT1:0
BOD enabled	1K CK	14CK[1]	0	00
Fast rising power	1K CK	14CK + 4.1ms[1]	0	01
Slowly rising power	1K CK	14CK + 65ms[1]	0	10
Reserved			0	11
BOD enabled	32K CK	14CK	1	00
Fast rising power	32K CK	14CK + 4.1ms	1	01
Slowly rising power	32K CK	14CK + 65ms	1	10
Reserved			1	11

Note: 1. These options should only be used if frequency stability at start-up is not important for the application.

10.7 Calibrated Internal RC Oscillator

By default, the Internal RC Oscillator provides an approximate 8MHz clock. Though voltage and temperature dependent, this clock can be very accurately calibrated by the user. See Table 31-1 on page 359 and "Internal Oscillator Speed" on page 392 for more details. The device is shipped with the CKDIV8 Fuse programmed. See "System Clock Prescaler" on page 47 for more details.

This clock may be selected as the system clock by programming the CKSEL Fuses as shown in Table 10-9. If selected, it will operate with no external components. During reset, hardware loads the pre-programmed calibration value into the OSCCAL Register and thereby automatically calibrates the RC Oscillator. The accuracy of this calibration is shown as Factory calibration in Table 31-1 on page 359.

By changing the OSCCAL register from SW, see "OSCCAL – Oscillator Calibration Register" on page 48, it is possible to get a higher calibration accuracy than by using the factory calibration. The accuracy of this calibration is shown as User calibration in Table 31-1 on page 359.

When this Oscillator is used as the chip clock, the Watchdog Oscillator will still be used for the Watchdog Timer and for the Reset Time-out. For more information on the pre-programmed calibration value, see the section "Calibration Byte" on page 328.

Table 10-9. Internal Calibrated RC Oscillator Operating Modes[(1)(2)]

Frequency Range [MHz]	CKSEL3:0
7.3 - 8.1	0010

Notes: 1. The device is shipped with this option selected.
2. If 8MHz frequency exceeds the specification of the device (depends on V_{CC}), the CKDIV8 Fuse can be programmed in order to divide the internal frequency by 8.

When this Oscillator is selected, start-up times are determined by the SUT Fuses as shown in Table 10-10.

Table 10-10. Start-up times for the internal calibrated RC Oscillator clock selection

Power Conditions	Start-up Time from Power-down and Power-save	Additional Delay from Reset (V_{CC} = 5.0V)	SUT1:0
BOD enabled	6CK	14CK	00
Fast rising power	6CK	14CK + 4.1ms	01
Slowly rising power	6CK	14CK + 65ms[(1)]	10
Reserved			11

Note: 1. The device is shipped with this option selected.

10.8 128kHz Internal Oscillator

The 128kHz internal Oscillator is a low power Oscillator providing a clock of 128kHz. The frequency is nominal at 3V and 25°C. This clock may be select as the system clock by programming the CKSEL Fuses to "11" as shown in Table 10-11.

Table 10-11. 128kHz Internal Oscillator Operating Modes[(1)]

Nominal Frequency	CKSEL3:0
128kHz	0011

Note: 1. Note that the 128kHz oscillator is a very low power clock source, and is not designed for high accuracy.

When this clock source is selected, start-up times are determined by the SUT Fuses as shown in Table 10-12 on page 46.

Table 10-12. Start-up Times for the 128kHz Internal Oscillator

Power Conditions	Start-up Time from Power-down and Power-save	Additional Delay from Reset	SUT1:0
BOD enabled	6CK	14CK	00
Fast rising power	6CK	14CK + 4ms	01
Slowly rising power	6CK	14CK + 64ms	10
Reserved			11

10.9 External Clock

To drive the device from an external clock source, XTAL1 should be driven as shown in Figure 10-4. To run the device on an external clock, the CKSEL Fuses must be programmed to “0000”.

Figure 10-4. External Clock Drive Configuration

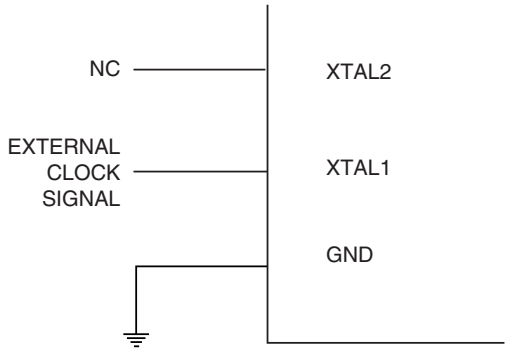

When this clock source is selected, start-up times are determined by the SUT Fuses as shown in Table 10-15 on page 49.

Table 10-13. Crystal Oscillator Clock Frequency

Nominal Frequency	CKSEL3:0
0 - 16MHz	0000

Table 10-14. Start-up Times for the External Clock Selection

Power Conditions	Start-up Time from Power-down and Power-save	Additional Delay from Reset (V_{CC} = 5.0V)	SUT1:0
BOD enabled	6CK	14CK	00
Fast rising power	6CK	14CK + 4.1ms	01
Slowly rising power	6CK	14CK + 65ms	10
Reserved			11

When applying an external clock, it is required to avoid sudden changes in the applied clock frequency to ensure stable operation of the MCU. A variation in frequency of more than 2% from one clock cycle to the next can lead to unpredictable behavior. If changes of more than 2% is required, ensure that the MCU is kept in Reset during the changes.

Note that the System Clock Prescaler can be used to implement run-time changes of the internal clock frequency while still ensuring stable operation. Refer to “System Clock Prescaler” on page 47 for details.

10.10 Clock Output Buffer

The device can output the system clock on the CLKO pin. To enable the output, the CKOUT Fuse has to be programmed. This mode is suitable when the chip clock is used to drive other circuits on the system. The clock also will be output during reset, and the normal operation of I/O pin will be overridden when the fuse is programmed. Any clock source, including the internal RC Oscillator, can be selected when the clock is output on CLKO. If the System Clock Prescaler is used, it is the divided system clock that is output.

10.11 Timer/Counter Oscillator

The device can operate its Timer/Counter2 from an external 32.768kHz watch crystal or a external clock source. See Figure 10-2 on page 41 for crystal connection.

Applying an external clock source to TOSC1 requires EXCLK in the ASSR Register written to logic one. See "Asynchronous Operation of Timer/Counter2" on page 179 for further description on selecting external clock as input instead of a 32kHz crystal.

10.12 System Clock Prescaler

The ATmega640/1280/1281/2560/2561 has a system clock prescaler, and the system clock can be divided by setting the "CLKPR – Clock Prescale Register" on page 48. This feature can be used to decrease the system clock frequency and the power consumption when the requirement for processing power is low. This can be used with all clock source options, and it will affect the clock frequency of the CPU and all synchronous peripherals. $clk_{I/O}$, clk_{ADC}, clk_{CPU}, and clk_{FLASH} are divided by a factor as shown in Table 10-15 on page 49.

When switching between prescaler settings, the System Clock Prescaler ensures that no glitches occurs in the clock system. It also ensures that no intermediate frequency is higher than neither the clock frequency corresponding to the previous setting, nor the clock frequency corresponding to the new setting.

The ripple counter that implements the prescaler runs at the frequency of the undivided clock, which may be faster than the CPU's clock frequency. Hence, it is not possible to determine the state of the prescaler - even if it were readable, and the exact time it takes to switch from one clock division to the other cannot be exactly predicted. From the time the CLKPS values are written, it takes between T1 + T2 and T1 + 2 × T2 before the new clock frequency is active. In this interval, 2 active clock edges are produced. Here, T1 is the previous clock period, and T2 is the period corresponding to the new prescaler setting.

To avoid unintentional changes of clock frequency, a special write procedure must be followed to change the CLKPS bits:

Write the Clock Prescaler Change Enable (CLKPCE) bit to one and all other bits in CLKPR to zero.

Within four cycles, write the desired value to CLKPS while writing a zero to CLKPCE.

Interrupts must be disabled when changing prescaler setting to make sure the write procedure is not interrupted.

10.13 Register Description

10.13.1 OSCCAL – Oscillator Calibration Register

Bit	7	6	5	4	3	2	1	0	
(0x66)	**CAL7**	**CAL6**	**CAL5**	**CAL4**	**CAL3**	**CAL2**	**CAL1**	**CAL0**	**OSCCAL**
Read/Write	R/W	R/W	R/W	R/W	R/W	R/W	R/W	R/W	
Initial Value	Device Specific Calibration Value								

- **Bits 7:0 – CAL7:0: Oscillator Calibration Value**

The Oscillator Calibration Register is used to trim the Calibrated Internal RC Oscillator to remove process variations from the oscillator frequency. A pre-programmed calibration value is automatically written to this register during chip reset, giving the Factory calibrated frequency as specified in Table 31-1 on page 359. The application software can write this register to change the oscillator frequency. The oscillator can be calibrated to frequencies as specified in Table 31-1 on page 359. Calibration outside that range is not guaranteed.

Note that this oscillator is used to time EEPROM and Flash write accesses, and these write times will be affected accordingly. If the EEPROM or Flash are written, do not calibrate to more than 8.8MHz. Otherwise, the EEPROM or Flash write may fail.

The CAL7 bit determines the range of operation for the oscillator. Setting this bit to 0 gives the lowest frequency range, setting this bit to 1 gives the highest frequency range. The two frequency ranges are overlapping, in other words a setting of OSCCAL = 0x7F gives a higher frequency than OSCCAL = 0x80.

The CAL6..0 bits are used to tune the frequency within the selected range. A setting of 0x00 gives the lowest frequency in that range, and a setting of 0x7F gives the highest frequency in the range.

10.13.2 CLKPR – Clock Prescale Register

Bit	7	6	5	4	3	2	1	0	
(0x61)	**CLKPCE**	**–**	**–**	**–**	**CLKPS3**	**CLKPS2**	**CLKPS1**	**CLKPS0**	**CLKPR**
Read/Write	R/W	R	R	R	R/W	R/W	R/W	R/W	
Initial Value	0	0	0	0	See Bit Description				

- **Bit 7 – CLKPCE: Clock Prescaler Change Enable**

The CLKPCE bit must be written to logic one to enable change of the CLKPS bits. The CLKPCE bit is only updated when the other bits in CLKPR are simultaneously written to zero. CLKPCE is cleared by hardware four cycles after it is written or when CLKPS bits are written. Rewriting the CLKPCE bit within this time-out period does neither extend the time-out period, nor clear the CLKPCE bit.

- **Bits 3:0 – CLKPS3:0: Clock Prescaler Select Bits 3 - 0**

These bits define the division factor between the selected clock source and the internal system clock. These bits can be written run-time to vary the clock frequency to suit the application requirements. As the divider divides the master clock input to the MCU, the speed of all synchronous peripherals is reduced when a division factor is used. The division factors are given in Table 10-15 on page 49.

The CKDIV8 Fuse determines the initial value of the CLKPS bits. If CKDIV8 is unprogrammed, the CLKPS bits will be reset to “0000”. If CKDIV8 is programmed, CLKPS bits are reset to “0011”, giving a division factor of 8 at start up. This feature should be used if the selected clock source has a higher frequency than the maximum frequency of the device at the present operating conditions. Note that any value can be written to the CLKPS bits regardless of the CKDIV8 Fuse setting. The Application software must ensure that a sufficient division factor is chosen if the selected clock source has a higher frequency than the maximum frequency of the device at the present operating conditions. The device is shipped with the CKDIV8 Fuse programmed.

Table 10-15. Clock Prescaler Select

CLKPS3	CLKPS2	CLKPS1	CLKPS0	Clock Division Factor
0	0	0	0	1
0	0	0	1	2
0	0	1	0	4
0	0	1	1	8
0	1	0	0	16
0	1	0	1	32
0	1	1	0	64
0	1	1	1	128
1	0	0	0	256
1	0	0	1	Reserved
1	0	1	0	Reserved
1	0	1	1	Reserved
1	1	0	0	Reserved
1	1	0	1	Reserved
1	1	1	0	Reserved
1	1	1	1	Reserved

11. Power Management and Sleep Modes

Sleep modes enable the application to shut down unused modules in the MCU, thereby saving power. The AVR provides various sleep modes allowing the user to tailor the power consumption to the application's requirements.

11.1 Sleep Modes

Figure 10-1 on page 39 presents the different clock systems in the ATmega640/1280/1281/2560/2561, and their distribution. The figure is helpful in selecting an appropriate sleep mode. Table 11-1 shows the different sleep modes and their wake-up sources.

Table 11-1. Active Clock Domains and Wake-up Sources in the Different Sleep Modes.

	Active Clock Domains					Oscillators		Wake-up Sources						
Sleep Mode	**clk_{CPU}**	**clk_{FLASH}**	**clk_{IO}**	**clk_{ADC}**	**clk_{ASY}**	**Main Clock Source Enabled**	**Timer Osc Enabled**	**INT7:0 and Pin Change**	**TWI Address Match**	**Timer2**	**SPM/ EEPROM Ready**	**ADC**	**WDT Interrupt**	**Other I/O**
Idle			X	X	X	X	X(2)	X	X	X	X	X	X	X
ADCNRM				X	X	X	X(2)	X(3)	X	X(2)	X	X	X	
Power-down								X(3)	X				X	
Power-save					X		X(2)	X(3)	X	X			X	
Standby(1)						X		X(3)	X				X	
Extended Standby					X(2)	X	X(2)	X(3)	X	X			X	

Note: 1. Only recommended with external crystal or resonator selected as clock source.
2. If Timer/Counter2 is running in asynchronous mode.
3. For INT7:4, only level interrupt.

To enter any of the sleep modes, the SE bit in "SMCR – Sleep Mode Control Register" on page 54 must be written to logic one and a SLEEP instruction must be executed. The SM2, SM1, and SM0 bits in the SMCR Register select which sleep mode will be activated by the SLEEP instruction. See Table 11-2 on page 54 for a summary.

If an enabled interrupt occurs while the MCU is in a sleep mode, the MCU wakes up. The MCU is then halted for four cycles in addition to the start-up time, executes the interrupt routine, and resumes execution from the instruction following SLEEP. The contents of the Register File and SRAM are unaltered when the device wakes up from sleep. If a reset occurs during sleep mode, the MCU wakes up and executes from the Reset Vector.

11.2 Idle Mode

When the SM2:0 bits are written to 000, the SLEEP instruction makes the MCU enter Idle mode, stopping the CPU but allowing the SPI, USART, Analog Comparator, ADC, 2-wire Serial Interface, Timer/Counters, Watchdog, and the interrupt system to continue operating. This sleep mode basically halts clk_{CPU} and clk_{FLASH}, while allowing the other clocks to run.

Idle mode enables the MCU to wake up from external triggered interrupts as well as internal ones like the Timer Overflow and USART Transmit Complete interrupts. If wake-up from the Analog Comparator interrupt is not required, the Analog Comparator can be powered down by setting the ACD bit in the Analog Comparator Control and Status Register – ACSR. This will reduce power consumption in Idle mode. If the ADC is enabled, a conversion starts automatically when this mode is entered.

11.3 ADC Noise Reduction Mode

When the SM2:0 bits are written to 001, the SLEEP instruction makes the MCU enter ADC Noise Reduction mode, stopping the CPU but allowing the ADC, the external interrupts, 2-wire Serial Interface address match, Timer/Counter2 and the Watchdog to continue operating (if enabled). This sleep mode basically halts clkI/O, clkCPU, and clkFLASH, while allowing the other clocks to run.

This improves the noise environment for the ADC, enabling higher resolution measurements. If the ADC is enabled, a conversion starts automatically when this mode is entered. Apart form the ADC Conversion Complete interrupt, only an External Reset, a Watchdog System Reset, a Watchdog interrupt, a Brown-out Reset, a 2-wire serial interface interrupt, a Timer/Counter2 interrupt, an SPM/EEPROM ready interrupt, an external level interrupt on INT7:4 or a pin change interrupt can wakeup the MCU from ADC Noise Reduction mode.

11.4 Power-down Mode

When the SM2:0 bits are written to 010, the SLEEP instruction makes the MCU enter Power-down mode. In this mode, the external Oscillator is stopped, while the external interrupts, the 2-wire Serial Interface, and the Watchdog continue operating (if enabled). Only an External Reset, a Watchdog Reset, a Brown-out Reset, 2-wire Serial Interface address match, an external level interrupt on INT7:4, an external interrupt on INT3:0, or a pin change interrupt can wake up the MCU. This sleep mode basically halts all generated clocks, allowing operation of asynchronous modules only.

Note that if a level triggered interrupt is used for wake-up from Power-down mode, the changed level must be held for some time to wake up the MCU. Refer to “External Interrupts” on page 109 for details.

When waking up from Power-down mode, there is a delay from the wake-up condition occurs until the wake-up becomes effective. This allows the clock to restart and become stable after having been stopped. The wake-up period is defined by the same CKSEL Fuses that define the Reset Time-out period, as described in “Clock Sources” on page 40.

11.5 Power-save Mode

When the SM2:0 bits are written to 011, the SLEEP instruction makes the MCU enter Power-save mode. This mode is identical to Power-down, with one exception:

If Timer/Counter2 is enabled, it will keep running during sleep. The device can wake up from either Timer Overflow or Output Compare event from Timer/Counter2 if the corresponding Timer/Counter2 interrupt enable bits are set in TIMSK2, and the Global Interrupt Enable bit in SREG is set. If Timer/Counter2 is not running, Power-down mode is recommended instead of Power-save mode.

The Timer/Counter2 can be clocked both synchronously and asynchronously in Power-save mode. If the Timer/Counter2 is not using the asynchronous clock, the Timer/Counter Oscillator is stopped during sleep. If the Timer/Counter2 is not using the synchronous clock, the clock source is stopped during sleep. Note that even if the synchronous clock is running in Power-save, this clock is only available for the Timer/Counter2.

11.6 Standby Mode

When the SM2:0 bits are 110 and an external crystal/resonator clock option is selected, the SLEEP instruction makes the MCU enter Standby mode. This mode is identical to Power-down with the exception that the Oscillator is kept running. From Standby mode, the device wakes up in six clock cycles.

11.7 Extended Standby Mode

When the SM2:0 bits are 111 and an external crystal/resonator clock option is selected, the SLEEP instruction makes the MCU enter Extended Standby mode. This mode is identical to Power-save mode with the exception that the Oscillator is kept running. From Extended Standby mode, the device wakes up in six clock cycles.

11.8 Power Reduction Register

The Power Reduction Register (PRR), see "PRR0 – Power Reduction Register 0" on page 55 and "PRR1 – Power Reduction Register 1" on page 56, provides a method for stopping the clock to individual peripherals to reduce power consumption.

Note that when the clock for a peripheral is stopped, then:

- The current state of the peripheral is frozen
- The associated registers can not be read or written
- Resources used by the peripherals (for example I/O pin, etc.) will remain occupied

The peripheral should in most cases be disabled before stopping the clock. Waking up a module, which is done by cleaning the bit in PRR, puts the module in the same state as before shutdown. Module shutdown can be used in Idle mode or Active mode to significantly reduce the overall power consumption. See "Power-down Supply Current" on page 380 for examples. In all other sleep modes, the clock is already stopped.

11.9 Minimizing Power Consumption

There are several issues to consider when trying to minimize the power consumption in an AVR controlled system. In general, sleep modes should be used as much as possible, and the sleep mode should be selected so that as few as possible of the device's functions are operating. All functions not needed should be disabled. In particular, the following modules may need special consideration when trying to achieve the lowest possible power consumption.

11.9.1 Analog to Digital Converter

If enabled, the ADC will be enabled in all sleep modes. To save power, the ADC should be disabled before entering any sleep mode. When the ADC is turned off and on again, the next conversion will be an extended conversion. Refer to "ADC – Analog to Digital Converter" on page 268 for details on ADC operation.

11.9.2 Analog Comparator

When entering Idle mode, the Analog Comparator should be disabled if not used. When entering ADC Noise Reduction mode, the Analog Comparator should be disabled. In other sleep modes, the Analog Comparator is automatically disabled. However, if the Analog Comparator is set up to use the Internal Voltage Reference as input, the Analog Comparator should be disabled in all sleep modes. Otherwise, the Internal Voltage Reference will be enabled, independent of sleep mode. Refer to "AC – Analog Comparator" on page 265 for details on how to configure the Analog Comparator.

11.9.3 Brown-out Detector

If the Brown-out Detector is not needed by the application, this module should be turned off. If the Brown-out Detector is enabled by the BODLEVEL Fuses, it will be enabled in all sleep modes, and hence, always consume power. In the deeper sleep modes, this will contribute significantly to the total current consumption. Refer to "Brown-out Detection" on page 59 for details on how to configure the Brown-out Detector.

11.9.4 Internal Voltage Reference

The Internal Voltage Reference will be enabled when needed by the Brown-out Detection, the Analog Comparator or the ADC. If these modules are disabled as described in the sections above, the internal voltage reference will be disabled and it will not be consuming power. When turned on again, the user must allow the reference to start up before the output is used. If the reference is kept on in sleep mode, the output can be used immediately. Refer to "Internal Voltage Reference" on page 60 for details on the start-up time.

11.9.5 Watchdog Timer

If the Watchdog Timer is not needed in the application, the module should be turned off. If the Watchdog Timer is enabled, it will be enabled in all sleep modes, and hence, always consume power. In the deeper sleep modes, this will contribute significantly to the total current consumption. Refer to "Interrupts" on page 101 for details on how to configure the Watchdog Timer.

11.9.6 Port Pins

When entering a sleep mode, all port pins should be configured to use minimum power. The most important is then to ensure that no pins drive resistive loads. In sleep modes where both the I/O clock ($clk_{I/O}$) and the ADC clock (clk_{ADC}) are stopped, the input buffers of the device will be disabled. This ensures that no power is consumed by the input logic when not needed. In some cases, the input logic is needed for detecting wake-up conditions, and it will then be enabled. Refer to the section "Digital Input Enable and Sleep Modes" on page 71 for details on which pins are enabled. If the input buffer is enabled and the input signal is left floating or have an analog signal level close to $V_{CC}/2$, the input buffer will use excessive power.

For analog input pins, the digital input buffer should be disabled at all times. An analog signal level close to $V_{CC}/2$ on an input pin can cause significant current even in active mode. Digital input buffers can be disabled by writing to the Digital Input Disable Registers (DIDR2, DIDR1 and DIDR0). Refer to "DIDR2 – Digital Input Disable Register 2" on page 288, "DIDR1 – Digital Input Disable Register 1" on page 267, and "DIDR0 – Digital Input Disable Register 0" on page 287 for details.

11.9.7 On-chip Debug System

If the On-chip debug system is enabled by the OCDEN Fuse and the chip enters sleep mode, the main clock source is enabled, and hence, always consumes power. In the deeper sleep modes, this will contribute significantly to the total current consumption.

There are three alternative ways to disable the OCD system:

- Disable the OCDEN Fuse
- Disable the JTAGEN Fuse
- Write one to the JTD bit in MCUCR

11.10 Register Description

11.10.1 SMCR – Sleep Mode Control Register

The Sleep Mode Control Register contains control bits for power management.

Bit	7	6	5	4	3	2	1	0	
0x33 (0x53)	–	–	–	–	SM2	SM1	SM0	SE	SMCR
Read/Write	R	R	R	R	R/W	R/W	R/W	R/W	
Initial Value	0	0	0	0	0	0	0	0	

- **Bits 3, 2, 1 – SM2:0: Sleep Mode Select Bits 2, 1, and 0**

These bits select between the five available sleep modes as shown in Table 11-2.

Table 11-2. Sleep Mode Select

SM2	SM1	SM0	Sleep Mode
0	0	0	Idle
0	0	1	ADC Noise Reduction
0	1	0	Power-down
0	1	1	Power-save
1	0	0	Reserved
1	0	1	Reserved
1	1	0	Standby(1)
1	1	1	Extended Standby(1)

Note: 1. Standby modes are only recommended for use with external crystals or resonators.

- **Bit 1 – SE: Sleep Enable**

The SE bit must be written to logic one to make the MCU enter the sleep mode when the SLEEP instruction is executed. To avoid the MCU entering the sleep mode unless it is the programmer's purpose, it is recommended to write the Sleep Enable (SE) bit to one just before the execution of the SLEEP instruction and to clear it immediately after waking up.

11.10.2 PRR0 – Power Reduction Register 0

Bit	7	6	5	4	3	2	1	0	
(0x64)	**PRTWI**	**PRTIM2**	**PRTIM0**	**–**	**PRTIM1**	**PRSPI**	**PRUSART0**	**PRADC**	**PRR0**
Read/Write	R/W	R/W	R/W	R	R/W	R/W	R/W	R/W	
Initial Value	0	0	0	0	0	0	0	0	

- **Bit 7 - PRTWI: Power Reduction TWI**

Writing a logic one to this bit shuts down the TWI by stopping the clock to the module. When waking up the TWI again, the TWI should be re initialized to ensure proper operation.

- **Bit 6 - PRTIM2: Power Reduction Timer/Counter2**

Writing a logic one to this bit shuts down the Timer/Counter2 module in synchronous mode (AS2 is 0). When the Timer/Counter2 is enabled, operation will continue like before the shutdown.

- **Bit 5 - PRTIM0: Power Reduction Timer/Counter0**

Writing a logic one to this bit shuts down the Timer/Counter0 module. When the Timer/Counter0 is enabled, operation will continue like before the shutdown.

- **Bit 4 - Res: Reserved bit**

This bit is reserved bit and will always read as zero.

- **Bit 3 - PRTIM1: Power Reduction Timer/Counter1**

Writing a logic one to this bit shuts down the Timer/Counter1 module. When the Timer/Counter1 is enabled, operation will continue like before the shutdown.

- **Bit 2 - PRSPI: Power Reduction Serial Peripheral Interface**

Writing a logic one to this bit shuts down the Serial Peripheral Interface by stopping the clock to the module. When waking up the SPI again, the SPI should be re initialized to ensure proper operation.

- **Bit 1 - PRUSART0: Power Reduction USART0**

Writing a logic one to this bit shuts down the USART0 by stopping the clock to the module. When waking up the USART0 again, the USART0 should be re initialized to ensure proper operation.

- **Bit 0 - PRADC: Power Reduction ADC**

Writing a logic one to this bit shuts down the ADC. The ADC must be disabled before shut down. The analog comparator cannot use the ADC input MUX when the ADC is shut down.

11.10.3 PRR1 – Power Reduction Register 1

Bit	7	6	5	4	3	2	1	0	
(0x65)	–	–	PRTIM5	PRTIM4	PRTIM3	PRUSART3	PRUSART2	PRUSART1	PRR1
Read/Write	R	R	R/W	R/W	R/W	R/W	R/W	R/W	
Initial Value	0	0	0	0	0	0	0	0	

- **Bit 7:6 - Res: Reserved bits**

These bits are reserved and will always read as zero.

- **Bit 5 - PRTIM5: Power Reduction Timer/Counter5**

Writing a logic one to this bit shuts down the Timer/Counter5 module. When the Timer/Counter5 is enabled, operation will continue like before the shutdown.

- **Bit 4 - PRTIM4: Power Reduction Timer/Counter4**

Writing a logic one to this bit shuts down the Timer/Counter4 module. When the Timer/Counter4 is enabled, operation will continue like before the shutdown.

- **Bit 3 - PRTIM3: Power Reduction Timer/Counter3**

Writing a logic one to this bit shuts down the Timer/Counter3 module. When the Timer/Counter3 is enabled, operation will continue like before the shutdown.

- **Bit 2 - PRUSART3: Power Reduction USART3**

Writing a logic one to this bit shuts down the USART3 by stopping the clock to the module. When waking up the USART3 again, the USART3 should be re initialized to ensure proper operation.

- **Bit 1 - PRUSART2: Power Reduction USART2**

Writing a logic one to this bit shuts down the USART2 by stopping the clock to the module. When waking up the USART2 again, the USART2 should be re initialized to ensure proper operation.

- **Bit 0 - PRUSART1: Power Reduction USART1**

Writing a logic one to this bit shuts down the USART1 by stopping the clock to the module. When waking up the USART1 again, the USART1 should be re initialized to ensure proper operation.

12. System Control and Reset

12.1 Resetting the AVR

During reset, all I/O Registers are set to their initial values, and the program starts execution from the Reset Vector. The instruction placed at the Reset Vector must be a JMP – Absolute Jump – instruction to the reset handling routine. If the program never enables an interrupt source, the Interrupt Vectors are not used, and regular program code can be placed at these locations. This is also the case if the Reset Vector is in the Application section while the Interrupt Vectors are in the Boot section or vice versa. The circuit diagram in Figure 12-1 on page 58 shows the reset logic. "System and Reset Characteristics" on page 360 defines the electrical parameters of the reset circuitry.

The I/O ports of the AVR are immediately reset to their initial state when a reset source goes active. This does not require any clock source to be running.

After all reset sources have gone inactive, a delay counter is invoked, stretching the internal reset. This allows the power to reach a stable level before normal operation starts. The time-out period of the delay counter is defined by the user through the SUT and CKSEL Fuses. The different selections for the delay period are presented in "Clock Sources" on page 40.

12.2 Reset Sources

The ATmega640/1280/1281/2560/2561 has five sources of reset:

- **Power-on Reset**. The MCU is reset when the supply voltage is below the Power-on Reset threshold (V_{POT})
- **External Reset**. The MCU is reset when a low level is present on the $\overline{RESET}$ pin for longer than the minimum pulse length
- **Watchdog Reset**. The MCU is reset when the Watchdog Timer period expires and the Watchdog is enabled
- **Brown-out Reset**. The MCU is reset when the supply voltage AV_{CC} is below the Brown-out Reset threshold (V_{BOT}) and the Brown-out Detector is enabled
- **JTAG AVR Reset**. The MCU is reset as long as there is a logic one in the Reset Register, one of the scan chains of the JTAG system. Refer to the section "IEEE 1149.1 (JTAG) Boundary-scan" on page 295 for details

Figure 12-1. Reset Logic

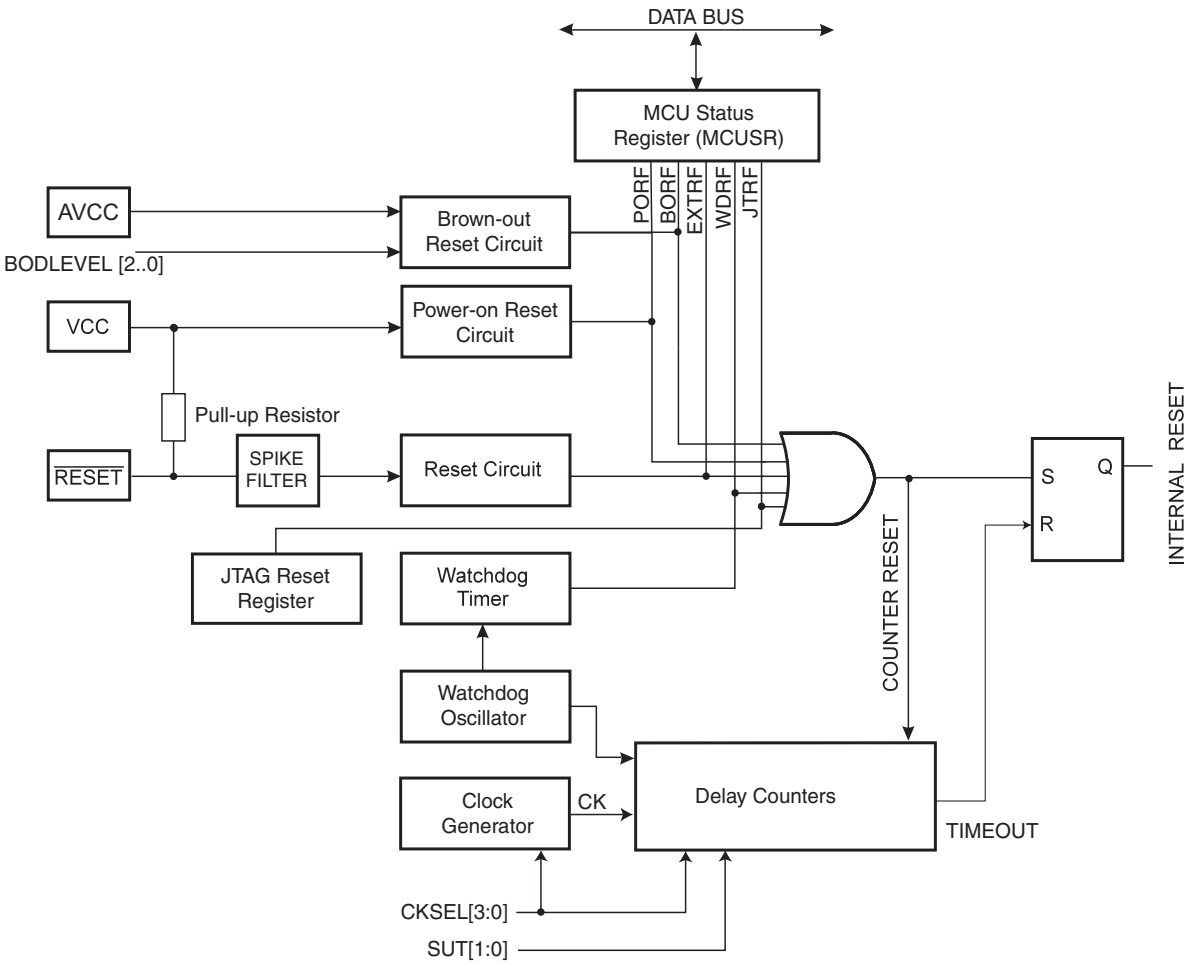

12.2.1 Power-on Reset

A Power-on Reset (POR) pulse is generated by an On-chip detection circuit. The detection level is defined in "System and Reset Characteristics" on page 360. The POR is activated whenever V_{CC} is below the detection level. The POR circuit can be used to trigger the start-up Reset, as well as to detect a failure in supply voltage.

A Power-on Reset (POR) circuit ensures that the device is reset from Power-on. Reaching the Power-on Reset threshold voltage invokes the delay counter, which determines how long the device is kept in RESET after V_{CC} rise. The RESET signal is activated again, without any delay, when V_{CC} decreases below the detection level.

Figure 12-2. MCU Start-up, $\overline{\text{RESET}}$ Tied to V_{CC}

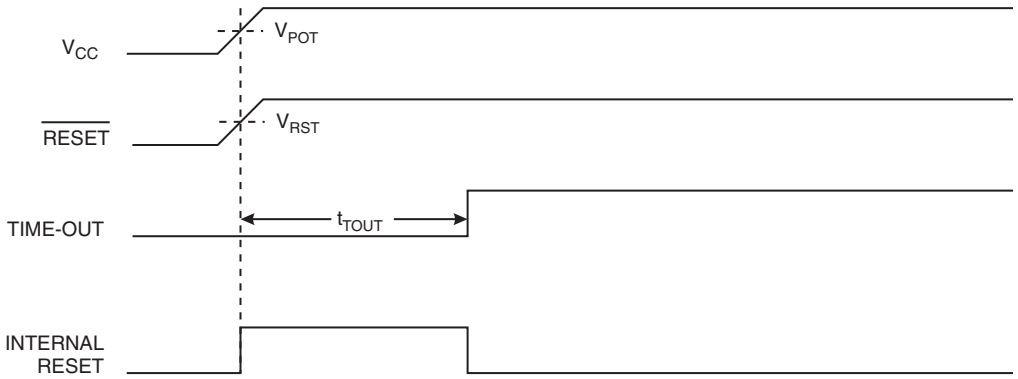

Figure 12-3. MCU Start-up, $\overline{\text{RESET}}$ Extended Externally

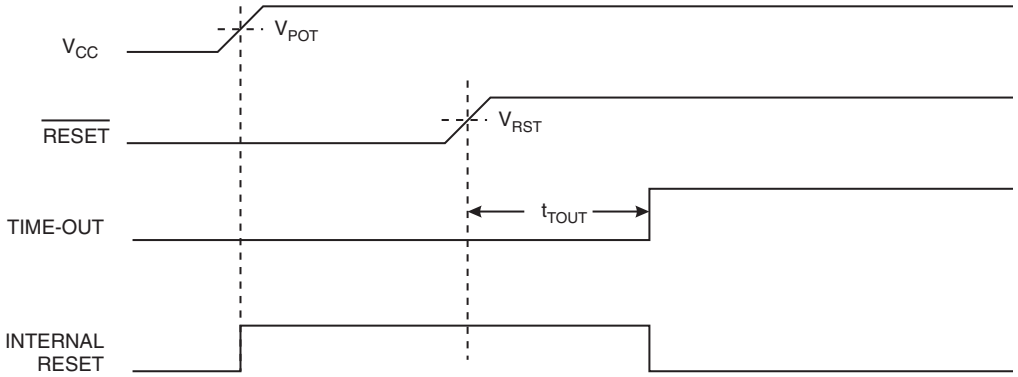

12.2.2 External Reset

An External Reset is generated by a low level on the $\overline{\text{RESET}}$ pin. Reset pulses longer than the minimum pulse width (see "System and Reset Characteristics" on page 360) will generate a reset, even if the clock is not running. Shorter pulses are not guaranteed to generate a reset. When the applied signal reaches the Reset Threshold Voltage – V_{RST} – on its positive edge, the delay counter starts the MCU after the Time-out period – t_{TOUT} – has expired.

Figure 12-4. External Reset During Operation

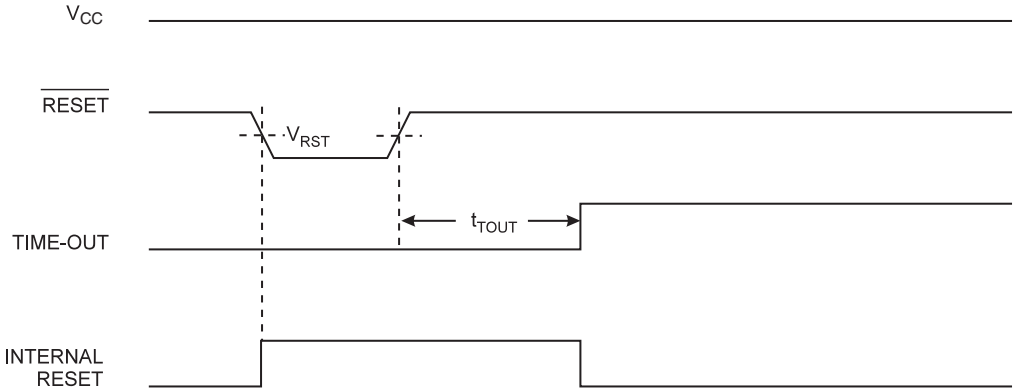

12.2.3 Brown-out Detection

ATmega640/1280/1281/2560/2561 has an On-chip Brown-out Detection (BOD) circuit for monitoring the AV_{CC} level during operation by comparing it to a fixed trigger level. The trigger level for the BOD can be selected by the BODLEVEL Fuses. The trigger level has a hysteresis to ensure spike free Brown-out Detection. The hysteresis on the detection level should be interpreted as $V_{BOT+} = V_{BOT} + V_{HYST}/2$ and $V_{BOT-} = V_{BOT} - V_{HYST}/2$.

When the BOD is enabled, and AV_{CC} decreases to a value below the trigger level (V_{BOT-} in Figure 12-5 on page 60), the Brown-out Reset is immediately activated. When AV_{CC} increases above the trigger level (V_{BOT+} in Figure 12-5 on page 60), the delay counter starts the MCU after the Time-out period t_{TOUT} has expired.

The BOD circuit will only detect a drop in AV_{CC} if the voltage stays below the trigger level for longer than t_{BOD} given in "System and Reset Characteristics" on page 360.

Figure 12-5. Brown-out Reset During Operation

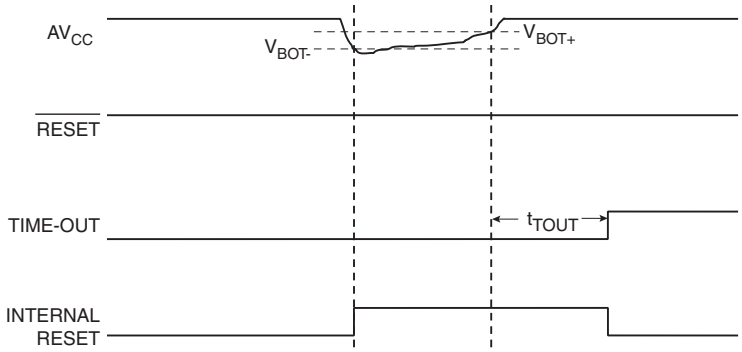

12.2.4 Watchdog Reset

When the Watchdog times out, it will generate a short reset pulse of one CK cycle duration. On the falling edge of this pulse, the delay timer starts counting the Time-out period t_{TOUT}. See "Watchdog Timer" on page 53. for details on operation of the Watchdog Timer.

Figure 12-6. Watchdog Reset During Operation

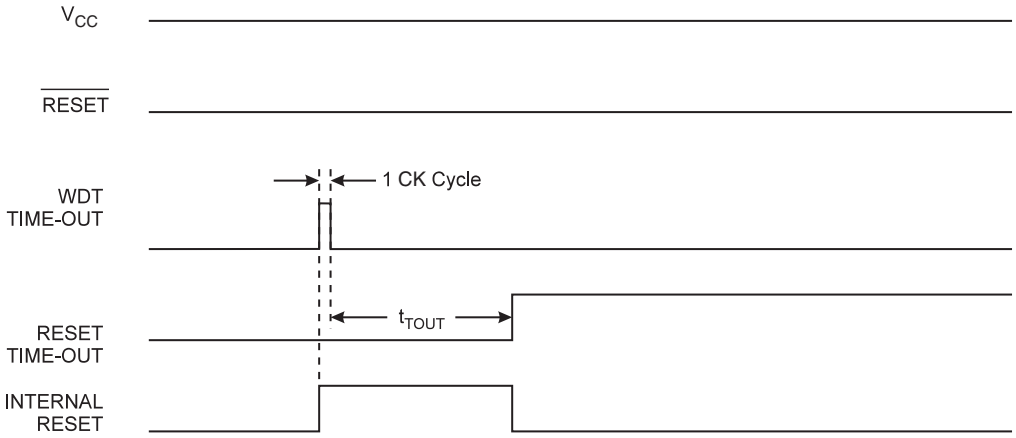

12.3 Internal Voltage Reference

ATmega640/1280/1281/2560/2561 features an internal bandgap reference. This reference is used for Brown-out Detection, and it can be used as an input to the Analog Comparator or the ADC.

12.3.1 Voltage Reference Enable Signals and Start-up Time

The voltage reference has a start-up time that may influence the way it should be used. The start-up time is given in "System and Reset Characteristics" on page 360. To save power, the reference is not always turned on. The reference is on during the following situations:

1. When the BOD is enabled (by programming the BODLEVEL [2:0] Fuse).
2. When the bandgap reference is connected to the Analog Comparator (by setting the ACBG bit in ACSR).
3. When the ADC is enabled.

Thus, when the BOD is not enabled, after setting the ACBG bit or enabling the ADC, the user must always allow the reference to start up before the output from the Analog Comparator or ADC is used. To reduce power consumption in Power-down mode, the user can avoid the three conditions above to ensure that the reference is turned off before entering Power-down mode.

12.4 Watchdog Timer

12.4.1 Features

- **Clocked from separate On-chip Oscillator**
- **Three Operating modes**
  - **Interrupt**
  - **System Reset**
  - **Interrupt and System Reset**
- **Selectable Time-out period from 16ms to 8s**
- **Possible Hardware fuse Watchdog always on (WDTON) for fail-safe mode**

Figure 12-7. Watchdog Timer

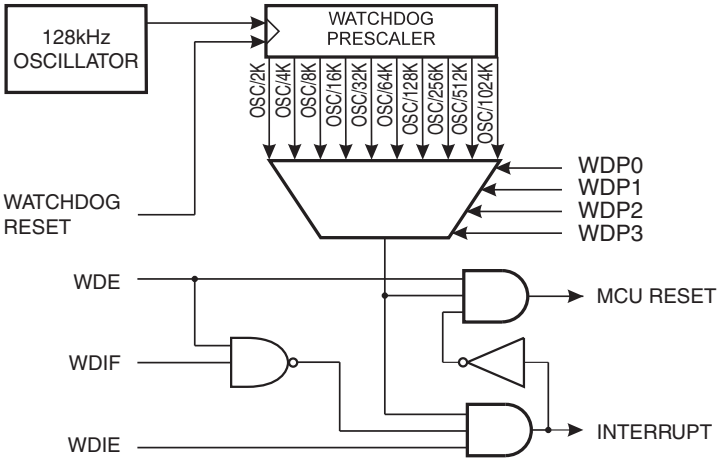

12.4.2 Overview

ATmega640/1280/1281/2560/2561 has an Enhanced Watchdog Timer (WDT). The WDT is a timer counting cycles of a separate on-chip 128kHz oscillator. The WDT gives an interrupt or a system reset when the counter reaches a given time-out value. In normal operation mode, it is required that the system uses the WDR - Watchdog Timer Reset - instruction to restart the counter before the time-out value is reached. If the system doesn't restart the counter, an interrupt or system reset will be issued.

In Interrupt mode, the WDT gives an interrupt when the timer expires. This interrupt can be used to wake the device from sleep-modes, and also as a general system timer. One example is to limit the maximum time allowed for certain operations, giving an interrupt when the operation has run longer than expected. In System Reset mode, the WDT gives a reset when the timer expires. This is typically used to prevent system hang-up in case of runaway code. The third mode, Interrupt and System Reset mode, combines the other two modes by first giving an interrupt and then switch to System Reset mode. This mode will for instance allow a safe shutdown by saving critical parameters before a system reset.

The Watchdog always on (WDTON) fuse, if programmed, will force the Watchdog Timer to System Reset mode. With the fuse programmed the System Reset mode bit (WDE) and Interrupt mode bit (WDIE) are locked to 1 and 0 respectively. To further ensure program security, alterations to the Watchdog set-up must follow timed sequences. The sequence for clearing WDE and changing time-out configuration is as follows:

1. In the same operation, write a logic one to the Watchdog change enable bit (WDCE) and WDE. A logic one must be written to WDE regardless of the previous value of the WDE bit.
2. Within the next four clock cycles, write the WDE and Watchdog prescaler bits (WDP) as desired, but with the WDCE bit cleared. This must be done in one operation.

The following code example shows one assembly and one C function for turning off the Watchdog Timer. The example assumes that interrupts are controlled (for example by disabling interrupts globally) so that no interrupts will occur during the execution of these functions.

Assembly Code Example[1]

```
WDT_off:
  ; Turn off global interrupt
  cli
  ; Reset Watchdog Timer
  wdr
  ; Clear WDRF in MCUSR
  in    r16, MCUSR
  andi  r16, (0xff & (0<<WDRF))
  out   MCUSR, r16
  ; Write logical one to WDCE and WDE
  ; Keep old prescaler setting to prevent unintentional time-out
  ldi r16, WDTCSR
  ori   r16, (1<<WDCE) | (1<<WDE)
  sts WDTCSR, r16
  ; Turn off WDT
  ldi   r16, (0<<WDE)
  sts WDTCSR, r16
  ; Turn on global interrupt
  sei
  ret
```

C Code Example[1]

```
void WDT_off(void)
{
  __disable_interrupt();
  __watchdog_reset();
  /* Clear WDRF in MCUSR */
  MCUSR &= ~(1<<WDRF);
  /* Write logical one to WDCE and WDE */
  /* Keep old prescaler setting to prevent unintentional time-out
*/
  WDTCSR |= (1<<WDCE) | (1<<WDE);
  /* Turn off WDT */
  WDTCSR = 0x00;
  __enable_interrupt();
}
```

Note: 1. The example code assumes that the part specific header file is included.

2. If the Watchdog is accidentally enabled, for example by a runaway pointer or brown-out condition, the device will be reset and the Watchdog Timer will stay enabled. If the code is not set up to handle the Watchdog, this might lead to an eternal loop of time-out resets. To avoid this situation, the application software should always clear the Watchdog System Reset Flag (WDRF) and the WDE control bit in the initialisation routine, even if the Watchdog is not in use.

The following code example shows one assembly and one C function for changing the time-out value of the Watchdog Timer.

Assembly Code Example[1]

```
WDT_Prescaler_Change:
  ; Turn off global interrupt
  cli
  ; Reset Watchdog Timer
  wdr
  ; Start timed sequence
  in    r16, WDTCSR
  ori   r16, (1<<WDCE) | (1<<WDE)
  out   WDTCSR, r16
  ; --  Got four cycles to set the new values from here -
  ; Set new prescaler(time-out) value = 64K cycles (~0.5 s)
  ldi   r16, (1<<WDE) | (1<<WDP2) | (1<<WDP0)
  out   WDTCSR, r16
  ; --  Finished setting new values, used 2 cycles -
  ; Turn on global interrupt
  sei
  ret
```

C Code Example[2]

```
void WDT_Prescaler_Change(void)
{
  __disable_interrupt();
  __watchdog_reset();
  /* Start timed  equence */
  WDTCSR |= (1<<WDCE) | (1<<WDE);
  /* Set new prescaler(time-out) value = 64K cycles (~0.5 s) */
  WDTCSR  = (1<<WDE) | (1<<WDP2) | (1<<WDP0);
  __enable_interrupt();
}
```

Notes:
1. The example code assumes that the part specific header file is included.
2. The Watchdog Timer should be reset before any change of the WDP bits, since a change in the WDP bits can result in a time-out when switching to a shorter time-out period.

12.5 Register Description

12.5.1 MCUSR – MCU Status Register

The MCU Status Register provides information on which reset source caused an MCU reset.

Bit	7	6	5	4	3	2	1	0	
0x35 (0x55)	–	–	–	JTRF	WDRF	BORF	EXTRF	PORF	MCUSR
Read/Write	R	R	R	R/W	R/W	R/W	R/W	R/W	
Initial Value	0	0	0	See Bit Description					

- **Bit 4 – JTRF: JTAG Reset Flag**

This bit is set if a reset is being caused by a logic one in the JTAG Reset Register selected by the JTAG instruction AVR_RESET. This bit is reset by a Power-on Reset, or by writing a logic zero to the flag.

- **Bit 3 – WDRF: Watchdog Reset Flag**

This bit is set if a Watchdog Reset occurs. The bit is reset by a Power-on Reset, or by writing a logic zero to the flag.

- **Bit 2 – BORF: Brown-out Reset Flag**

This bit is set if a Brown-out Reset occurs. The bit is reset by a Power-on Reset, or by writing a logic zero to the flag.

- **Bit 1 – EXTRF: External Reset Flag**

This bit is set if an External Reset occurs. The bit is reset by a Power-on Reset, or by writing a logic zero to the flag.

- **Bit 0 – PORF: Power-on Reset Flag**

This bit is set if a Power-on Reset occurs. The bit is reset only by writing a logic zero to the flag.

To make use of the Reset Flags to identify a reset condition, the user should read and then Reset the MCUSR as early as possible in the program. If the register is cleared before another reset occurs, the source of the reset can be found by examining the Reset Flags.

12.5.2 WDTCSR – Watchdog Timer Control Register

Bit	7	6	5	4	3	2	1	0	
(0x60)	**WDIF**	**WDIE**	**WDP3**	**WDCE**	**WDE**	**WDP2**	**WDP1**	**WDP0**	**WDTCSR**
Read/Write	R/W	R/W	R/W	R/W	R/W	R/W	R/W	R/W	
Initial Value	0	0	0	0	X	0	0	0	

- **Bit 7 - WDIF: Watchdog Interrupt Flag**

This bit is set when a time-out occurs in the Watchdog Timer and the Watchdog Timer is configured for interrupt. WDIF is cleared by hardware when executing the corresponding interrupt handling vector. Alternatively, WDIF is cleared by writing a logic one to the flag. When the I-bit in SREG and WDIE are set, the Watchdog Time-out Interrupt is executed.

- **Bit 6 - WDIE: Watchdog Interrupt Enable**

When this bit is written to one and the I-bit in the Status Register is set, the Watchdog Interrupt is enabled. If WDE is cleared in combination with this setting, the Watchdog Timer is in Interrupt Mode, and the corresponding interrupt is executed if time-out in the Watchdog Timer occurs.

If WDE is set, the Watchdog Timer is in Interrupt and System Reset Mode. The first time-out in the Watchdog Timer will set WDIF. Executing the corresponding interrupt vector will clear WDIE and WDIF automatically by hardware (the Watchdog goes to System Reset Mode). This is useful for keeping the Watchdog Timer security while using the interrupt. To stay in Interrupt and System Reset Mode, WDIE must be set after each interrupt. This should however not be done within the interrupt service routine itself, as this might compromise the safety-function of the Watchdog System Reset mode. If the interrupt is not executed before the next time-out, a System Reset will be applied.

Table 12-1. Watchdog Timer Configuration

WDTON[(1)]	WDE	WDIE	Mode	Action on Time-out
1	0	0	Stopped	None
1	0	1	Interrupt Mode	Interrupt
1	1	0	System Reset Mode	Reset
1	1	1	Interrupt and System Reset Mode	Interrupt, then go to System Reset Mode
0	x	x	System Reset Mode	Reset

Note: 1. WDTON Fuse set to “0“ means programmed and “1” means unprogrammed.

- **Bit 4 - WDCE: Watchdog Change Enable**

This bit is used in timed sequences for changing WDE and prescaler bits. To clear the WDE bit, and/or change the prescaler bits, WDCE must be set.

Once written to one, hardware will clear WDCE after four clock cycles.

- **Bit 3 - WDE: Watchdog System Reset Enable**

WDE is overridden by WDRF in MCUSR. This means that WDE is always set when WDRF is set. To clear WDE, WDRF must be cleared first. This feature ensures multiple resets during conditions causing failure, and a safe start-up after the failure.

- **Bit 5, 2:0 - WDP3:0: Watchdog Timer Prescaler 3, 2, 1 and 0**

The WDP3:0 bits determine the Watchdog Timer prescaling when the Watchdog Timer is running. The different prescaling values and their corresponding time-out periods are shown in Table 12-2 on page 66.

Table 12-2. Watchdog Timer Prescale Select

WDP3	WDP2	WDP1	WDP0	Number of WDT Oscillator Cycles	Typical Time-out at V_{CC} = 5.0V
0	0	0	0	2K (2048) cycles	16ms
0	0	0	1	4K (4096) cycles	32ms
0	0	1	0	8K (8192) cycles	64ms
0	0	1	1	16K (16384) cycles	0.125s
0	1	0	0	32K (32768) cycles	0.25s
0	1	0	1	64K (65536) cycles	0.5s
0	1	1	0	128K (131072) cycles	1.0s
0	1	1	1	256K (262144) cycles	2.0s
1	0	0	0	512K (524288) cycles	4.0s
1	0	0	1	1024K (1048576) cycles	8.0s
1	0	1	0	Reserved	
1	0	1	1		
1	1	0	0		
1	1	0	1		
1	1	1	0		
1	1	1	1		

13. I/O-Ports

13.1 Introduction

All AVR ports have true Read-Modify-Write functionality when used as general digital I/O ports. This means that the direction of one port pin can be changed without unintentionally changing the direction of any other pin with the SBI and CBI instructions. The same applies when changing drive value (if configured as output) or enabling/disabling of pull-up resistors (if configured as input). Each output buffer has symmetrical drive characteristics with both high sink and source capability. The pin driver is strong enough to drive LED displays directly. All port pins have individually selectable pull-up resistors with a supply-voltage invariant resistance. All I/O pins have protection diodes to both V_{CC} and Ground as indicated in Figure 13-1. Refer to "Electrical Characteristics" on page 355 for a complete list of parameters.

Figure 13-1. I/O Pin Equivalent Schematic

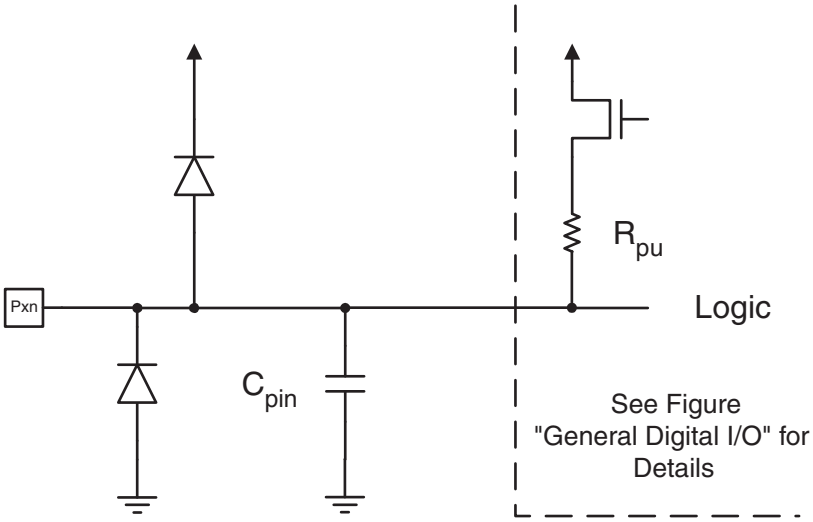

All registers and bit references in this section are written in general form. A lower case "x" represents the numbering letter for the port, and a lower case "n" represents the bit number. However, when using the register or bit defines in a program, the precise form must be used. For example, PORTB3 for bit no. 3 in Port B, here documented generally as PORTxn. The physical I/O Registers and bit locations are listed in "Table 13-34 and Table 13-35 relates the alternate functions of Port L to the overriding signals shown in Figure 13-5 on page 73." on page 95.

Three I/O memory address locations are allocated for each port, one each for the Data Register – PORTx, Data Direction Register – DDRx, and the Port Input Pins – PINx. The Port Input Pins I/O location is read only, while the Data Register and the Data Direction Register are read/write. However, writing a logic one to a bit in the PINx Register, will result in a toggle in the corresponding bit in the Data Register. In addition, the Pull-up Disable – PUD bit in MCUCR disables the pull-up function for all pins in all ports when set.

Using the I/O port as General Digital I/O is described in "Ports as General Digital I/O" on page 68. Most port pins are multiplexed with alternate functions for the peripheral features on the device. How each alternate function interferes with the port pin is described in "Alternate Port Functions" on page 72. Refer to the individual module sections for a full description of the alternate functions.

Note that enabling the alternate function of some of the port pins does not affect the use of the other pins in the port as general digital I/O.

13.2 Ports as General Digital I/O

The ports are bi-directional I/O ports with optional internal pull-ups. Figure 13-2 shows a functional description of one I/O-port pin, here generically called Pxn.

Figure 13-2. General Digital I/O[1]

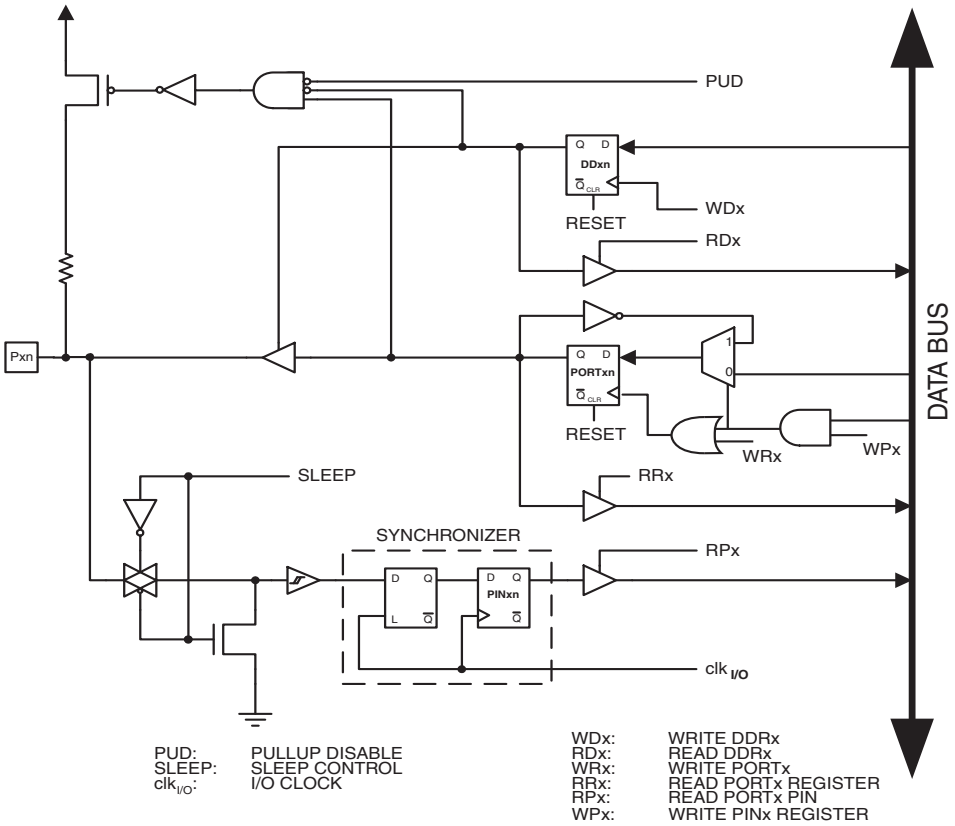

Note: 1. WRx, WPx, WDx, RRx, RPx, and RDx are common to all pins within the same port. $clk_{I/O}$, SLEEP, and PUD are common to all ports.

13.2.1 Configuring the Pin

Each port pin consists of three register bits: DDxn, PORTxn, and PINxn. As shown in "Table 13-34 and Table 13-35 relates the alternate functions of Port L to the overriding signals shown in Figure 13-5 on page 73." on page 95, the DDxn bits are accessed at the DDRx I/O address, the PORTxn bits at the PORTx I/O address, and the PINxn bits at the PINx I/O address.

The DDxn bit in the DDRx Register selects the direction of this pin. If DDxn is written logic one, Pxn is configured as an output pin. If DDxn is written logic zero, Pxn is configured as an input pin.

If PORTxn is written logic one when the pin is configured as an input pin, the pull-up resistor is activated. To switch the pull-up resistor off, PORTxn has to be written logic zero or the pin has to be configured as an output pin. The port pins are tri-stated when reset condition becomes active, even if no clocks are running.

If PORTxn is written logic one when the pin is configured as an output pin, the port pin is driven high (one). If PORTxn is written logic zero when the pin is configured as an output pin, the port pin is driven low (zero).

13.2.2 Toggling the Pin

Writing a logic one to PINxn toggles the value of PORTxn, independent on the value of DDRxn. Note that the SBI instruction can be used to toggle one single bit in a port.

13.2.3 Switching Between Input and Output

When switching between tri-state ({DDxn, PORTxn} = 0b00) and output high ({DDxn, PORTxn} = 0b11), an intermediate state with either pull-up enabled {DDxn, PORTxn} = 0b01) or output low ({DDxn, PORTxn} = 0b10) must occur. Normally, the pull-up enabled state is fully acceptable, as a high-impedant environment will not notice the difference between a strong high driver and a pull-up. If this is not the case, the PUD bit in the MCUCR Register can be set to disable all pull-ups in all ports.

Switching between input with pull-up and output low generates the same problem. The user must use either the tri-state ({DDxn, PORTxn} = 0b00) or the output high state ({DDxn, PORTxn} = 0b11) as an intermediate step.

Table 13-1 summarizes the control signals for the pin value.

Table 13-1. Port Pin Configurations

DDxn	PORTxn	PUD (in MCUCR)	I/O	Pull-up	Comment
0	0	X	Input	No	Tri-state (Hi-Z)
0	1	0	Input	Yes	Pxn will source current if ext. pulled low
0	1	1	Input	No	Tri-state (Hi-Z)
1	0	X	Output	No	Output Low (Sink)
1	1	X	Output	No	Output High (Source)

13.2.4 Reading the Pin Value

Independent of the setting of Data Direction bit DDxn, the port pin can be read through the PINxn Register bit. As shown in Figure 13-2 on page 68, the PINxn Register bit and the preceding latch constitute a synchronizer. This is needed to avoid metastability if the physical pin changes value near the edge of the internal clock, but it also introduces a delay. Figure 13-3 on page 69 shows a timing diagram of the synchronization when reading an externally applied pin value. The maximum and minimum propagation delays are denoted $t_{pd,max}$ and $t_{pd,min}$ respectively.

Figure 13-3. Synchronization when Reading an Externally Applied Pin value

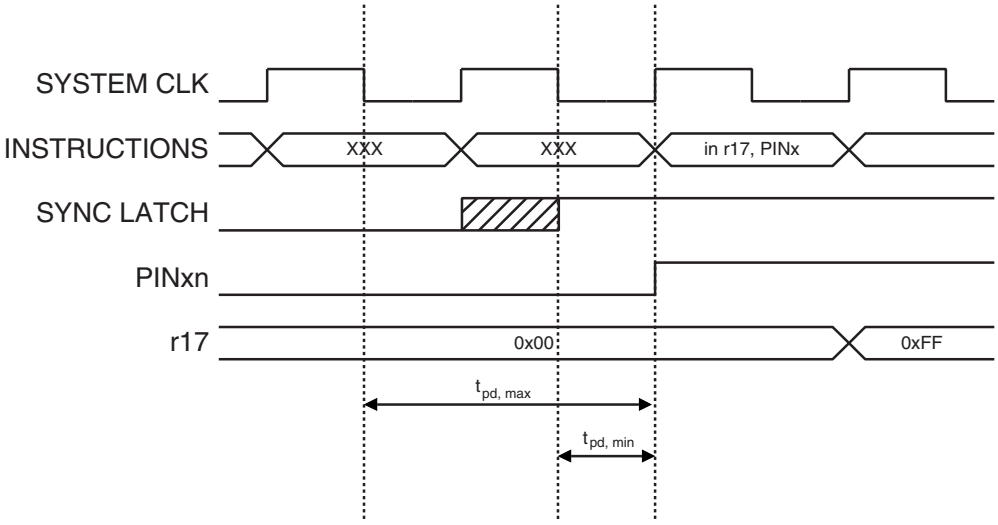

Consider the clock period starting shortly after the first falling edge of the system clock. The latch is closed when the clock is low, and goes transparent when the clock is high, as indicated by the shaded region of the “SYNC

LATCH" signal. The signal value is latched when the system clock goes low. It is clocked into the PINxn Register at the succeeding positive clock edge. As indicated by the two arrows tpd,max and tpd,min, a single signal transition on the pin will be delayed between ½ and 1½ system clock period depending upon the time of assertion.

When reading back a software assigned pin value, a nop instruction must be inserted as indicated in Figure 13-4. The out instruction sets the "SYNC LATCH" signal at the positive edge of the clock. In this case, the delay tpd through the synchronizer is one system clock period.

Figure 13-4. Synchronization when Reading a Software Assigned Pin Value

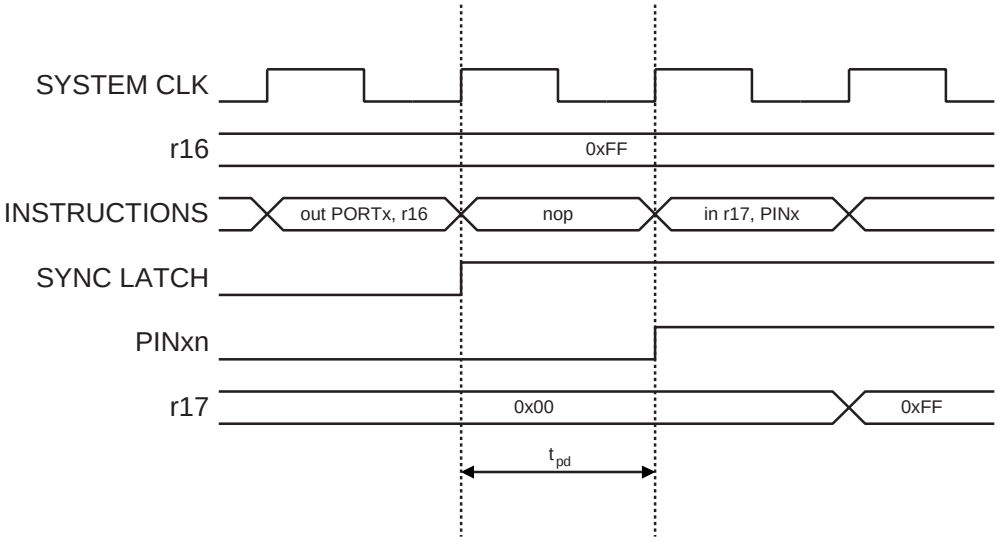

The following code example shows how to set port B pins 0 and 1 high, pins 2 and 3 low, and define the port pins from 4 to 7 as input with pull-ups assigned to port pins 6 and 7. The resulting pin values are read back again, but as previously discussed, a *nop* instruction is included to be able to read back the value recently assigned to some of the pins.

Assembly Code Example[1]

```
...
; Define pull-ups and set outputs high
; Define directions for port pins
ldi   r16,(1<<PB7)|(1<<PB6)|(1<<PB1)|(1<<PB0)
ldi   r17,(1<<DDB3)|(1<<DDB2)|(1<<DDB1)|(1<<DDB0)
out   PORTB,r16
out   DDRB,r17
; Insert nop for synchronization
nop
; Read port pins
in    r16,PINB
...
```

C Code Example

```
unsigned char i;
...
/* Define pull-ups and set outputs high */
/* Define directions for port pins */
PORTB = (1<<PB7)|(1<<PB6)|(1<<PB1)|(1<<PB0);
DDRB = (1<<DDB3)|(1<<DDB2)|(1<<DDB1)|(1<<DDB0);
/* Insert nop for synchronization*/
__no_operation();
/* Read port pins */
i = PINB;
...
```

Note: 1. For the assembly program, two temporary registers are used to minimize the time from pull-ups are set on pins 0, 1, 6, and 7, until the direction bits are correctly set, defining bit 2 and 3 as low and redefining bits 0 and 1 as strong high drivers.

13.2.5 Digital Input Enable and Sleep Modes

As shown in Figure 13-2 on page 68, the digital input signal can be clamped to ground at the input of the schmitt-trigger. The signal denoted SLEEP in the figure, is set by the MCU Sleep Controller in Power-down mode, Power-save mode, and Standby mode to avoid high power consumption if some input signals are left floating, or have an analog signal level close to $V_{CC}/2$.

SLEEP is overridden for port pins enabled as external interrupt pins. If the external interrupt request is not enabled, SLEEP is active also for these pins. SLEEP is also overridden by various other alternate functions as described in "Alternate Port Functions" on page 72.

If a logic high level ("one") is present on an asynchronous external interrupt pin configured as "Interrupt on Rising Edge, Falling Edge, or Any Logic Change on Pin" while the external interrupt is *not* enabled, the corresponding External Interrupt Flag will be set when resuming from the above mentioned Sleep mode, as the clamping in these sleep mode produces the requested logic change.

13.2.6 Unconnected Pins

If some pins are unused, it is recommended to ensure that these pins have a defined level. Even though most of the digital inputs are disabled in the deep sleep modes as described above, floating inputs should be avoided to reduce current consumption in all other modes where the digital inputs are enabled (Reset, Active mode and Idle mode).

The simplest method to ensure a defined level of an unused pin, is to enable the internal pull-up. In this case, the pull-up will be disabled during reset. If low power consumption during reset is important, it is recommended to use an external pull-up or pull-down. Connecting unused pins directly to V_{CC} or GND is not recommended, since this may cause excessive currents if the pin is accidentally configured as an output.

13.3 Alternate Port Functions

Most port pins have alternate functions in addition to being general digital I/Os. Figure 13-5 on page 73 shows how the port pin control signals from the simplified Figure 13-2 on page 68 can be overridden by alternate functions. The overriding signals may not be present in all port pins, but the figure serves as a generic description applicable to all port pins in the AVR microcontroller family.

Figure 13-5. Alternate Port Functions[1]

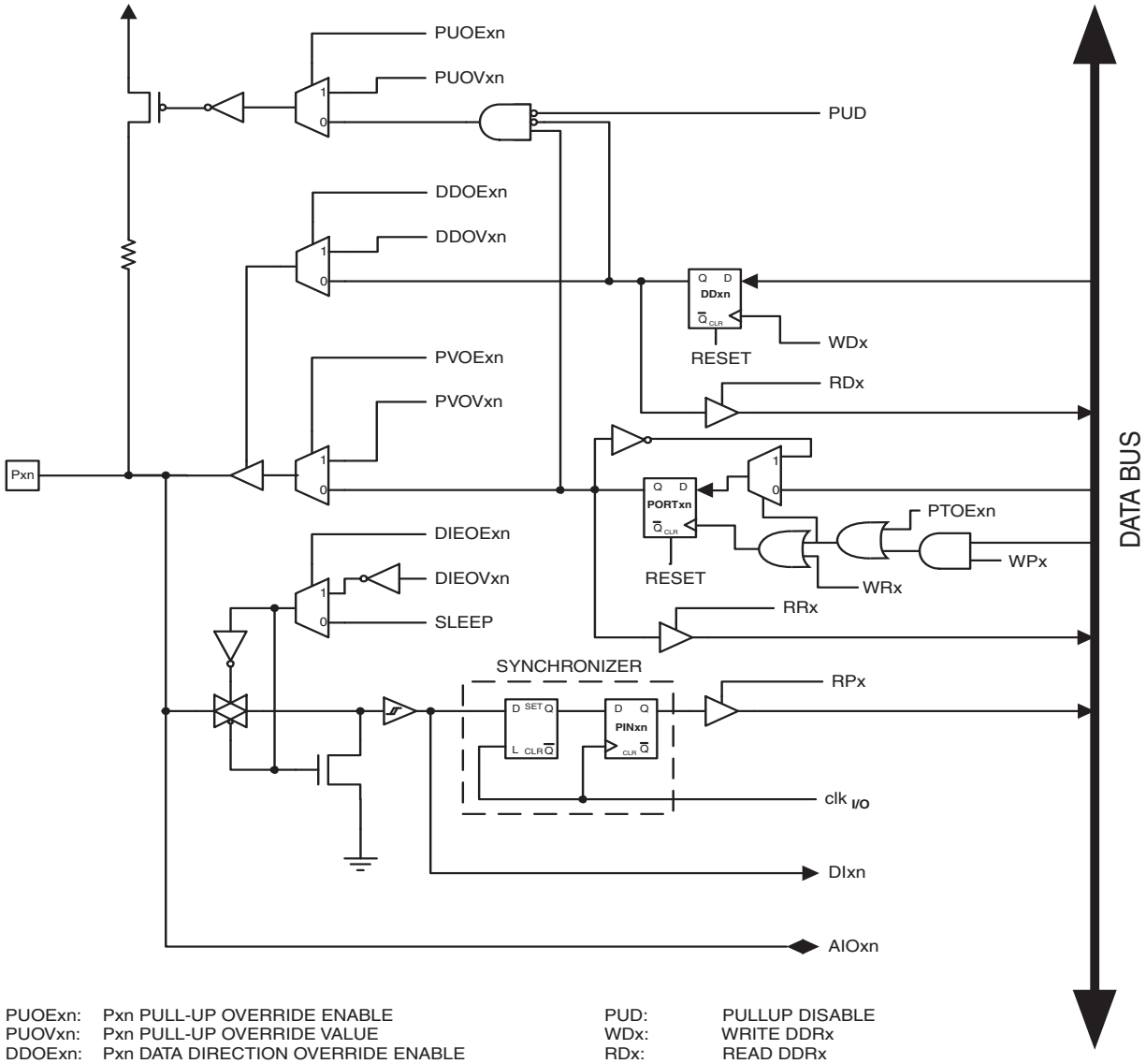

PUOExn:	Pxn PULL-UP OVERRIDE ENABLE	PUD:	PULLUP DISABLE
PUOVxn:	Pxn PULL-UP OVERRIDE VALUE	WDx:	WRITE DDRx
DDOExn:	Pxn DATA DIRECTION OVERRIDE ENABLE	RDx:	READ DDRx
DDOVxn:	Pxn DATA DIRECTION OVERRIDE VALUE	RRx:	READ PORTx REGISTER
PVOExn:	Pxn PORT VALUE OVERRIDE ENABLE	WRx:	WRITE PORTx
PVOVxn:	Pxn PORT VALUE OVERRIDE VALUE	RPx:	READ PORTx PIN
DIEOExn:	Pxn DIGITAL INPUT-ENABLE OVERRIDE ENABLE	WPx:	WRITE PINx
DIEOVxn:	Pxn DIGITAL INPUT-ENABLE OVERRIDE VALUE	$clk_{I/O}$:	I/O CLOCK
SLEEP:	SLEEP CONTROL	DIxn:	DIGITAL INPUT PIN n ON PORTx
PTOExn:	Pxn, PORT TOGGLE OVERRIDE ENABLE	AIOxn:	ANALOG INPUT/OUTPUT PIN n ON PORTx

Note: 1. WRx, WPx, WDx, RRx, RPx, and RDx are common to all pins within the same port. $clk_{I/O}$, SLEEP, and PUD are common to all ports. All other signals are unique for each pin.

Table 13-2 summarizes the function of the overriding signals. The pin and port indexes from Figure 13-5 on page 73 are not shown in the succeeding tables. The overriding signals are generated internally in the modules having the alternate function.

Table 13-2. Generic Description of Overriding Signals for Alternate Functions

Signal Name	Full Name	Description
PUOE	Pull-up Override Enable	If this signal is set, the pull-up enable is controlled by the PUOV signal. If this signal is cleared, the pull-up is enabled when {DDxn, PORTxn, PUD} = 0b010.
PUOV	Pull-up Override Value	If PUOE is set, the pull-up is enabled/disabled when PUOV is set/cleared, regardless of the setting of the DDxn, PORTxn, and PUD Register bits.
DDOE	Data Direction Override Enable	If this signal is set, the Output Driver Enable is controlled by the DDOV signal. If this signal is cleared, the Output driver is enabled by the DDxn Register bit.
DDOV	Data Direction Override Value	If DDOE is set, the Output Driver is enabled/disabled when DDOV is set/cleared, regardless of the setting of the DDxn Register bit.
PVOE	Port Value Override Enable	If this signal is set and the Output Driver is enabled, the port value is controlled by the PVOV signal. If PVOE is cleared, and the Output Driver is enabled, the port Value is controlled by the PORTxn Register bit.
PVOV	Port Value Override Value	If PVOE is set, the port value is set to PVOV, regardless of the setting of the PORTxn Register bit.
PTOE	Port Toggle Override Enable	If PTOE is set, the PORTxn Register bit is inverted.
DIEOE	Digital Input Enable Override Enable	If this bit is set, the Digital Input Enable is controlled by the DIEOV signal. If this signal is cleared, the Digital Input Enable is determined by MCU state (Normal mode, sleep mode).
DIEOV	Digital Input Enable Override Value	If DIEOE is set, the Digital Input is enabled/disabled when DIEOV is set/cleared, regardless of the MCU state (Normal mode, sleep mode).
DI	Digital Input	This is the Digital Input to alternate functions. In the figure, the signal is connected to the output of the schmitt trigger but before the synchronizer. Unless the Digital Input is used as a clock source, the module with the alternate function will use its own synchronizer.
AIO	Analog Input/Output	This is the Analog Input/output to/from alternate functions. The signal is connected directly to the pad, and can be used bi-directionally.

The following subsections shortly describe the alternate functions for each port, and relate the overriding signals to the alternate function. Refer to the alternate function description for further details.

13.3.1 Alternate Functions of Port A

The Port A has an alternate function as the address low byte and data lines for the External Memory Interface.

Table 13-3. Port A Pins Alternate Functions

Port Pin	Alternate Function
PA7	AD7 (External memory interface address and data bit 7)
PA6	AD6 (External memory interface address and data bit 6)
PA5	AD5 (External memory interface address and data bit 5)
PA4	AD4 (External memory interface address and data bit 4)
PA3	AD3 (External memory interface address and data bit 3)
PA2	AD2 (External memory interface address and data bit 2)
PA1	AD1 (External memory interface address and data bit 1)
PA0	AD0 (External memory interface address and data bit 0)

Table 13-4 and Table 13-5 on page 76 relates the alternate functions of Port A to the overriding signals shown in Figure 13-5 on page 73.

Table 13-4. Overriding Signals for Alternate Functions in PA7:PA4

Signal Name	PA7/AD7	PA6/AD6	PA5/AD5	PA4/AD4
PUOE	SRE	SRE	SRE	SRE
PUOV	~($\overline{WR}$ | ADA[1]) • PORTA7 • $\overline{PUD}$	~($\overline{WR}$ | ADA) • PORTA6 • $\overline{PUD}$	~($\overline{WR}$ | ADA) • PORTA5 • $\overline{PUD}$	~($\overline{WR}$ | ADA) • PORTA4 • $\overline{PUD}$
DDOE	SRE	SRE	SRE	SRE
DDOV	$\overline{WR}$ | ADA	$\overline{WR}$ | ADA	$\overline{WR}$ | ADA	$\overline{WR}$ | ADA
PVOE	SRE	SRE	SRE	SRE
PVOV	A7 • ADA | D7 OUTPUT • $\overline{WR}$	A6 • ADA | D6 OUTPUT • $\overline{WR}$	A5 • ADA | D5 OUTPUT • $\overline{WR}$	A4 • ADA | D4 OUTPUT • $\overline{WR}$
DIEOE	0	0	0	0
DIEOV	0	0	0	0
DI	D7 INPUT	D6 INPUT	D5 INPUT	D4 INPUT
AIO	–	–	–	–

Note: 1. ADA is short for ADdress Active and represents the time when address is output. See "External Memory Interface" on page 27 for details.

Table 13-5. Overriding Signals for Alternate Functions in PA3:PA0

Signal Name	PA3/AD3	PA2/AD2	PA1/AD1	PA0/AD0
PUOE	SRE	SRE	SRE	SRE
PUOV	~($\overline{WR}$ | ADA) • PORTA3 • $\overline{PUD}$	~($\overline{WR}$ | ADA) • PORTA2 • $\overline{PUD}$	~($\overline{WR}$ | ADA) • PORTA1 • $\overline{PUD}$	~($\overline{WR}$ | ADA) • PORTA0 • $\overline{PUD}$
DDOE	SRE	SRE	SRE	SRE
DDOV	$\overline{WR}$ | ADA	$\overline{WR}$ | ADA	$\overline{WR}$ | ADA	$\overline{WR}$ | ADA
PVOE	SRE	SRE	SRE	SRE
PVOV	A3 • ADA | D3 OUTPUT • $\overline{WR}$	A2• ADA | D2 OUTPUT • $\overline{WR}$	A1 • ADA | D1 OUTPUT • $\overline{WR}$	A0 • ADA | D0 OUTPUT • $\overline{WR}$
DIEOE	0	0	0	0
DIEOV	0	0	0	0
DI	D3 INPUT	D2 INPUT	D1 INPUT	D0 INPUT
AIO	–	–	–	–

13.3.2 Alternate Functions of Port B

The Port B pins with alternate functions are shown in Table 13-6.

Table 13-6. Port B Pins Alternate Functions

Port Pin	Alternate Functions
PB7	OC0A/OC1C/PCINT7 (Output Compare and PWM Output A for Timer/Counter0, Output Compare and PWM Output C for Timer/Counter1 or Pin Change Interrupt 7)
PB6	OC1B/PCINT6 (Output Compare and PWM Output B for Timer/Counter1 or Pin Change Interrupt 6)
PB5	OC1A/PCINT5 (Output Compare and PWM Output A for Timer/Counter1 or Pin Change Interrupt 5)
PB4	OC2A/PCINT4 (Output Compare and PWM Output A for Timer/Counter2 or Pin Change Interrupt 4)
PB3	MISO/PCINT3 (SPI Bus Master Input/Slave Output or Pin Change Interrupt 3)
PB2	MOSI/PCINT2 (SPI Bus Master Output/Slave Input or Pin Change Interrupt 2)
PB1	SCK/PCINT1 (SPI Bus Serial Clock or Pin Change Interrupt 1)
PB0	$\overline{SS}$/PCINT0 (SPI Slave Select input or Pin Change Interrupt 0)

The alternate pin configuration is as follows:

- **OC0A/OC1C/PCINT7, Bit 7**

OC0A, Output Compare Match A output: The PB7 pin can serve as an external output for the Timer/Counter0 Output Compare. The pin has to be configured as an output (DDB7 set “one”) to serve this function. The OC0A pin is also the output pin for the PWM mode timer function.

OC1C, Output Compare Match C output: The PB7 pin can serve as an external output for the Timer/Counter1 Output Compare C. The pin has to be configured as an output (DDB7 set (one)) to serve this function. The OC1C pin is also the output pin for the PWM mode timer function.

PCINT7, Pin Change Interrupt source 7: The PB7 pin can serve as an external interrupt source.

- **OC1B/PCINT6, Bit 6**

OC1B, Output Compare Match B output: The PB6 pin can serve as an external output for the Timer/Counter1 Output Compare B. The pin has to be configured as an output (DDB6 set (one)) to serve this function. The OC1B pin is also the output pin for the PWM mode timer function.

PCINT6, Pin Change Interrupt source 6: The PB6 pin can serve as an external interrupt source.

- **OC1A/PCINT5, Bit 5**

OC1A, Output Compare Match A output: The PB5 pin can serve as an external output for the Timer/Counter1 Output Compare A. The pin has to be configured as an output (DDB5 set (one)) to serve this function. The OC1A pin is also the output pin for the PWM mode timer function.

PCINT5, Pin Change Interrupt source 5: The PB5 pin can serve as an external interrupt source.

- **OC2A/PCINT4, Bit 4**

OC2A, Output Compare Match output: The PB4 pin can serve as an external output for the Timer/Counter2 Output Compare. The pin has to be configured as an output (DDB4 set (one)) to serve this function. The OC2A pin is also the output pin for the PWM mode timer function.

PCINT4, Pin Change Interrupt source 4: The PB4 pin can serve as an external interrupt source.

- **MISO/PCINT3 – Port B, Bit 3**

MISO: Master Data input, Slave Data output pin for SPI channel. When the SPI is enabled as a master, this pin is configured as an input regardless of the setting of DDB3. When the SPI is enabled as a slave, the data direction of this pin is controlled by DDB3. When the pin is forced to be an input, the pull-up can still be controlled by the PORTB3 bit.

PCINT3, Pin Change Interrupt source 3: The PB3 pin can serve as an external interrupt source.

- **MOSI/PCINT2 – Port B, Bit 2**

MOSI: SPI Master Data output, Slave Data input for SPI channel. When the SPI is enabled as a slave, this pin is configured as an input regardless of the setting of DDB2. When the SPI is enabled as a master, the data direction of this pin is controlled by DDB2. When the pin is forced to be an input, the pull-up can still be controlled by the PORTB2 bit.

PCINT2, Pin Change Interrupt source 2: The PB2 pin can serve as an external interrupt source.

- **SCK/PCINT1 – Port B, Bit 1**

SCK: Master Clock output, Slave Clock input pin for SPI channel. When the SPI is enabled as a slave, this pin is configured as an input regardless of the setting of DDB1. When the SPI0 is enabled as a master, the data direction of this pin is controlled by DDB1. When the pin is forced to be an input, the pull-up can still be controlled by the PORTB1 bit.

PCINT1, Pin Change Interrupt source 1: The PB1 pin can serve as an external interrupt source.

- **$\overline{\text{SS}}$/PCINT0 – Port B, Bit 0**

$\overline{\text{SS}}$: Slave Port Select input. When the SPI is enabled as a slave, this pin is configured as an input regardless of the setting of DDB0. As a slave, the SPI is activated when this pin is driven low. When the SPI is enabled as a master, the data direction of this pin is controlled by DDB0. When the pin is forced to be an input, the pull-up can still be controlled by the PORTB0 bit.

Table 13-7 and Table 13-8 relate the alternate functions of Port B to the overriding signals shown in Figure 13-5 on page 73. SPI MSTR INPUT and SPI SLAVE OUTPUT constitute the MISO signal, while MOSI is divided into SPI MSTR OUTPUT and SPI SLAVE INPUT.

PCINT0, Pin Change Interrupt source 0: The PB0 pin can serve as an external interrupt source.

Table 13-7. Overriding Signals for Alternate Functions in PB7:PB4

Signal Name	PB7/OC0A/OC1C	PB6/OC1B	PB5/OC1A	PB4/OC2A
PUOE	0	0	0	0
PUOV	0	0	0	0
DDOE	0	0	0	0
DDOV	0	0	0	0
PVOE	OC0/OC1C ENABLE	OC1B ENABLE	OC1A ENABLE	OC2A ENABLE
PVOV	OC0/OC1C	OC1B	OC1A	OC2A
DIEOE	PCINT7 • PCIE0	PCINT6 • PCIE0	PCINT5 • PCIE0	PCINT4 • PCIE0
DIEOV	1	1	1	1
DI	PCINT7 INPUT	PCINT6 INPUT	PCINT5 INPUT	PCINT4 INPUT
AIO	–	–	–	–

Table 13-8. Overriding Signals for Alternate Functions in PB3:PB0

Signal Name	PB3/MISO	PB2/MOSI	PB1/SCK	PB0/$\overline{SS}$
PUOE	SPE • MSTR	SPE • $\overline{MSTR}$	SPE • $\overline{MSTR}$	SPE • $\overline{MSTR}$
PUOV	PORTB3 • $\overline{PUD}$	PORTB2 • $\overline{PUD}$	PORTB1 • $\overline{PUD}$	PORTB0 • $\overline{PUD}$
DDOE	SPE • MSTR	SPE • $\overline{MSTR}$	SPE • $\overline{MSTR}$	SPE • $\overline{MSTR}$
DDOV	0	0	0	0
PVOE	SPE • $\overline{MSTR}$	SPE • MSTR	SPE • MSTR	0
PVOV	SPI SLAVE OUTPUT	SPI MSTR OUTPUT	SCK OUTPUT	0
DIEOE	PCINT3 • PCIE0	PCINT2 • PCIE0	PCINT1 • PCIE0	PCINT0 • PCIE0
DIEOV	1	1	1	1
DI	SPI MSTR INPUT PCINT3 INPUT	SPI SLAVE INPUT PCINT2 INPUT	SCK INPUT PCINT1 INPUT	SPI $\overline{SS}$ PCINT0 INPUT
AIO	–	–	–	–

13.3.3 Alternate Functions of Port C

The Port C alternate function is as follows:

Table 13-9. Port C Pins Alternate Functions

Port Pin	Alternate Function
PC7	A15 (External Memory interface address bit 15)
PC6	A14 (External Memory interface address bit 14)
PC5	A13 (External Memory interface address bit 13)
PC4	A12 (External Memory interface address bit 12)
PC3	A11 (External Memory interface address bit 11)
PC2	A10 (External Memory interface address bit 10)
PC1	A9 (External Memory interface address bit 9)
PC0	A8 (External Memory interface address bit 8)

Table 13-10 and Table 13-11 on page 80 relate the alternate functions of Port C to the overriding signals shown in Figure 13-5 on page 73.

Table 13-10. Overriding Signals for Alternate Functions in PC7:PC4

Signal Name	PC7/A15	PC6/A14	PC5/A13	PC4/A12
PUOE	SRE • (XMM<1)	SRE • (XMM<2)	SRE • (XMM<3)	SRE • (XMM<4)
PUOV	0	0	0	0
DDOE	SRE • (XMM<1)	SRE • (XMM<2)	SRE • (XMM<3)	SRE • (XMM<4)
DDOV	1	1	1	1
PVOE	SRE • (XMM<1)	SRE • (XMM<2)	SRE • (XMM<3)	SRE • (XMM<4)
PVOV	A15	A14	A13	A12
DIEOE	0	0	0	0
DIEOV	0	0	0	0
DI	–	–	–	–
AIO	–	–	–	–

Table 13-11. Overriding Signals for Alternate Functions in PC3:PC0

Signal Name	PC3/A11	PC2/A10	PC1/A9	PC0/A8
PUOE	SRE • (XMM<5)	SRE • (XMM<6)	SRE • (XMM<7)	SRE • (XMM<7)
PUOV	0	0	0	0
DDOE	SRE • (XMM<5)	SRE • (XMM<6)	SRE • (XMM<7)	SRE • (XMM<7)
DDOV	1	1	1	1
PVOE	SRE • (XMM<5)	SRE • (XMM<6)	SRE • (XMM<7)	SRE • (XMM<7)
PVOV	A11	A10	A9	A8
DIEOE	0	0	0	0
DIEOV	0	0	0	0
DI	–	–	–	–
AIO	–	–	–	–

13.3.4 Alternate Functions of Port D

The Port D pins with alternate functions are shown in Table 13-12.

Table 13-12. Port D Pins Alternate Functions

Port Pin	Alternate Function
PD7	T0 (Timer/Counter0 Clock Input)
PD6	T1 (Timer/Counter1 Clock Input)
PD5	XCK1 (USART1 External Clock Input/Output)
PD4	ICP1 (Timer/Counter1 Input Capture Trigger)
PD3	$\overline{\text{INT3}}$/TXD1 (External Interrupt3 Input or USART1 Transmit Pin)
PD2	$\overline{\text{INT2/RXD1}}$ (External Interrupt2 Input or USART1 Receive Pin)
PD1	$\overline{\text{INT1}}$/SDA (External Interrupt1 Input or TWI Serial DAta)
PD0	$\overline{\text{INT0}}$/SCL (External Interrupt0 Input or TWI Serial CLock)

The alternate pin configuration is as follows:

- **T0 – Port D, Bit 7**

T0, Timer/Counter0 counter source.

- **T1 – Port D, Bit 6**

T1, Timer/Counter1 counter source.

- **XCK1 – Port D, Bit 5**

XCK1, USART1 External clock. The Data Direction Register (DDD5) controls whether the clock is output (DDD5 set) or input (DDD5 cleared). The XCK1 pin is active only when the USART1 operates in Synchronous mode.

- **ICP1 – Port D, Bit 4**

ICP1 – Input Capture Pin 1: The PD4 pin can act as an input capture pin for Timer/Counter1.

- **$\overline{\text{INT3}}$/TXD1 – Port D, Bit 3**

INT3, External Interrupt source 3: The PD3 pin can serve as an external interrupt source to the MCU.

TXD1, Transmit Data (Data output pin for the USART1). When the USART1 Transmitter is enabled, this pin is configured as an output regardless of the value of DDD3.

- **$\overline{\text{INT2}}$/RXD1 – Port D, Bit 2**

INT2, External Interrupt source 2. The PD2 pin can serve as an External Interrupt source to the MCU.

RXD1, Receive Data (Data input pin for the USART1). When the USART1 receiver is enabled this pin is configured as an input regardless of the value of DDD2. When the USART forces this pin to be an input, the pull-up can still be controlled by the PORTD2 bit.

- **$\overline{\text{INT1}}$/SDA – Port D, Bit 1**

INT1, External Interrupt source 1. The PD1 pin can serve as an external interrupt source to the MCU.

SDA, 2-wire Serial Interface Data: When the TWEN bit in TWCR is set (one) to enable the 2-wire Serial Interface, pin PD1 is disconnected from the port and becomes the Serial Data I/O pin for the 2-wire Serial Interface. In this mode, there is a spike filter on the pin to suppress spikes shorter than 50ns on the input signal, and the pin is driven by an open drain driver with slew-rate limitation.

- **$\overline{\text{INT0}}$/SCL – Port D, Bit 0**

INT0, External Interrupt source 0. The PD0 pin can serve as an external interrupt source to the MCU.

SCL, 2-wire Serial Interface Clock: When the TWEN bit in TWCR is set (one) to enable the 2-wire Serial Interface, pin PD0 is disconnected from the port and becomes the Serial Clock I/O pin for the 2-wire Serial Interface. In this mode, there is a spike filter on the pin to suppress spikes shorter than 50ns on the input signal, and the pin is driven by an open drain driver with slew-rate limitation.

Table 13-13 on page 81 and Table 13-14 on page 82 relates the alternate functions of Port D to the overriding signals shown in Figure 13-5 on page 73.

Table 13-13. Overriding Signals for Alternate Functions PD7:PD4

Signal Name	PD7/T0	PD6/T1	PD5/XCK1	PD4/ICP1
PUOE	0	0	0	0
PUOV	0	0	0	0
DDOE	0	0	XCK1 OUTPUT ENABLE	0
DDOV	0	0	1	0
PVOE	0	0	XCK1 OUTPUT ENABLE	0
PVOV	0	0	XCK1 OUTPUT	0
DIEOE	0	0	0	0
DIEOV	0	0	0	0
DI	T0 INPUT	T1 INPUT	XCK1 INPUT	ICP1 INPUT
AIO	–	–	–	–

Table 13-14. Overriding Signals for Alternate Functions in PD3:PD0[1]

Signal Name	PD3/INT3/TXD1	PD2/INT2/RXD1	PD1/INT1/SDA	PD0/INT0/SCL
PUOE	TXEN1	RXEN1	TWEN	TWEN
PUOV	0	PORTD2 • $\overline{PUD}$	PORTD1 • $\overline{PUD}$	PORTD0 • $\overline{PUD}$
DDOE	TXEN1	RXEN1	TWEN	TWEN
DDOV	1	0	SDA_OUT	SCL_OUT
PVOE	TXEN1	0	TWEN	TWEN
PVOV	TXD1	0	0	0
DIEOE	INT3 ENABLE	INT2 ENABLE	INT1 ENABLE	INT0 ENABLE
DIEOV	1	1	1	1
DI	INT3 INPUT	INT2 INPUT/RXD1	INT1 INPUT	INT0 INPUT
AIO	–	–	SDA INPUT	SCL INPUT

Note: 1. When enabled, the 2-wire Serial Interface enables Slew-Rate controls on the output pins PD0 and PD1. This is not shown in this table. In addition, spike filters are connected between the AIO outputs shown in the port figure and the digital logic of the TWI module.

13.3.5 Alternate Functions of Port E

The Port E pins with alternate functions are shown in Table 13-15.

Table 13-15. Port E Pins Alternate Functions

Port Pin	Alternate Function
PE7	INT7/ICP3/CLK0 (External Interrupt 7 Input, Timer/Counter3 Input Capture Trigger or Divided System Clock)
PE6	INT6/ T3 (External Interrupt 6 Input or Timer/Counter3 Clock Input)
PE5	INT5/OC3C (External Interrupt 5 Input or Output Compare and PWM Output C for Timer/Counter3)
PE4	INT4/OC3B (External Interrupt4 Input or Output Compare and PWM Output B for Timer/Counter3)
PE3	AIN1/OC3A (Analog Comparator Negative Input or Output Compare and PWM Output A for Timer/Counter3)
PE2	AIN0/XCK0 (Analog Comparator Positive Input or USART0 external clock input/output)
PE1	PDO[1]/TXD0 (Programming Data Output or USART0 Transmit Pin)
PE0	PDI[1]/RXD0/PCINT8 (Programming Data Input, USART0 Receive Pin or Pin Change Interrupt 8)

Note: 1. Only for ATmega1281/2561. For ATmega640/1280/2560 these functions are placed on MISO/MOSI pins.

- **INT7/ICP3/CLKO – Port E, Bit 7**

INT7, External Interrupt source 7: The PE7 pin can serve as an external interrupt source.

ICP3, Input Capture Pin 3: The PE7 pin can act as an input capture pin for Timer/Counter3.

CLKO - Divided System Clock: The divided system clock can be output on the PE7 pin. The divided system clock will be output if the CKOUT Fuse is programmed, regardless of the PORTE7 and DDE7 settings. It will also be output during reset.

- **INT6/T3 – Port E, Bit 6**

INT6, External Interrupt source 6: The PE6 pin can serve as an external interrupt source.

T3, Timer/Counter3 counter source.

- **INT5/OC3C – Port E, Bit 5**

INT5, External Interrupt source 5: The PE5 pin can serve as an External Interrupt source.

OC3C, Output Compare Match C output: The PE5 pin can serve as an External output for the Timer/Counter3 Output Compare C. The pin has to be configured as an output (DDE5 set “one”) to serve this function. The OC3C pin is also the output pin for the PWM mode timer function.

- **INT4/OC3B – Port E, Bit 4**

INT4, External Interrupt source 4: The PE4 pin can serve as an External Interrupt source.

OC3B, Output Compare Match B output: The PE4 pin can serve as an External output for the Timer/Counter3 Output Compare B. The pin has to be configured as an output (DDE4 set (one)) to serve this function. The OC3B pin is also the output pin for the PWM mode timer function.

- **AIN1/OC3A – Port E, Bit 3**

AIN1 – Analog Comparator Negative input. This pin is directly connected to the negative input of the Analog Comparator.

OC3A, Output Compare Match A output: The PE3 pin can serve as an External output for the Timer/Counter3 Output Compare A. The pin has to be configured as an output (DDE3 set “one”) to serve this function. The OC3A pin is also the output pin for the PWM mode timer function.

- **AIN0/XCK0 – Port E, Bit 2**

AIN0 – Analog Comparator Positive input. This pin is directly connected to the positive input of the Analog Comparator.

XCK0, USART0 External clock. The Data Direction Register (DDE2) controls whether the clock is output (DDE2 set) or input (DDE2 cleared). The XCK0 pin is active only when the USART0 operates in Synchronous mode.

- **PDO/TXD0 – Port E, Bit 1**

PDO, SPI Serial Programming Data Output. During Serial Program Downloading, this pin is used as data output line for the ATmega1281/2561. For ATmega640/1280/2560 this function is placed on MISO.

TXD0, USART0 Transmit pin.

- **PDI/RXD0/PCINT8 – Port E, Bit 0**

PDI, SPI Serial Programming Data Input. During Serial Program Downloading, this pin is used as data input line for the ATmega1281/2561. For ATmega640/1280/2560 this function is placed on MOSI.

RXD0, USART0 Receive Pin. Receive Data (Data input pin for the USART0). When the USART0 receiver is enabled this pin is configured as an input regardless of the value of DDRE0. When the USART0 forces this pin to be an input, a logical one in PORTE0 will turn on the internal pull-up.

PCINT8, Pin Change Interrupt source 8: The PE0 pin can serve as an external interrupt source.

Table 13-16 on page 84 and Table 13-17 on page 84 relates the alternate functions of Port E to the overriding signals shown in Figure 13-5 on page 73.

Table 13-16. Overriding Signals for Alternate Functions PE7:PE4

Signal Name	PE7/INT7/ICP3	PE6/INT6/T3	PE5/INT5/OC3C	PE4/INT4/OC3B
PUOE	0	0	0	0
PUOV	0	0	0	0
DDOE	0	0	0	0
DDOV	0	0	0	0
PVOE	0	0	OC3C ENABLE	OC3B ENABLE
PVOV	0	0	OC3C	OC3B
DIEOE	INT7 ENABLE	INT6 ENABLE	INT5 ENABLE	INT4 ENABLE
DIEOV	1	1	1	1
DI	INT7 INPUT/ICP3 INPUT	INT7 INPUT/T3 INPUT	INT5 INPUT	INT4 INPUT
AIO	–	–	–	–

Table 13-17. Overriding Signals for Alternate Functions in PE3:PE0

Signal Name	PE3/AIN1/OC3A	PE2/AIN0/XCK0	PE1/PDO[(1)]/TXD0	PE0/PDI[(1)]/RXD0/PCINT8
PUOE	0	0	TXEN0	RXEN0
PUOV	0	0	0	PORTE0 • $\overline{\text{PUD}}$
DDOE	0	XCK0 OUTPUT ENABLE	TXEN0	RXEN0
DDOV	0	1	1	0
PVOE	OC3B ENABLE	XCK0 OUTPUT ENABLE	TXEN0	0
PVOV	OC3B	XCK0 OUTPUT	TXD0	0
DIEOE	0	0	0	PCINT8 • PCIE1
DIEOV	0	0	0	1
DI	0	XCK0 INPUT	–	RXD0
PE0	0	0	0	PCINT8 INPUT
AIO	AIN1 INPUT	AIN0 INPUT	–	–

Note: 1. PDO/PDI only available at PE1/PE0 for ATmega1281/2561.

13.3.6 Alternate Functions of Port F

The Port F has an alternate function as analog input for the ADC as shown in Table 13-18. If some Port F pins are configured as outputs, it is essential that these do not switch when a conversion is in progress. This might corrupt the result of the conversion. If the JTAG interface is enabled, the pull-up resistors on pins PF7(TDI), PF5(TMS), and PF4(TCK) will be activated even if a Reset occurs.

Table 13-18. Port F Pins Alternate Functions

Port Pin	Alternate Function
PF7	ADC7/TDI (ADC input channel 7 or JTAG Test Data Input)
PF6	ADC6/TDO (ADC input channel 6 or JTAG Test Data Output)
PF5	ADC5/TMS (ADC input channel 5 or JTAG Test Mode Select)
PF4	ADC4/TCK (ADC input channel 4 or JTAG Test ClocK)
PF3	ADC3 (ADC input channel 3)
PF2	ADC2 (ADC input channel 2)
PF1	ADC1 (ADC input channel 1)
PF0	ADC0 (ADC input channel 0)

- **TDI, ADC7 – Port F, Bit 7**

ADC7, Analog to Digital Converter, Channel 7.

TDI, JTAG Test Data In: Serial input data to be shifted in to the Instruction Register or Data Register (scan chains). When the JTAG interface is enabled, this pin can not be used as an I/O pin.

- **TDO, ADC6 – Port F, Bit 6**

ADC6, Analog to Digital Converter, Channel 6.

TDO, JTAG Test Data Out: Serial output data from Instruction Register or Data Register. When the JTAG interface is enabled, this pin can not be used as an I/O pin.

The TDO pin is tri-stated unless TAP states that shift out data are entered.

- **TMS, ADC5 – Port F, Bit 5**

ADC5, Analog to Digital Converter, Channel 5.

TMS, JTAG Test Mode Select: This pin is used for navigating through the TAP-controller state machine. When the JTAG interface is enabled, this pin can not be used as an I/O pin.

- **TCK, ADC4 – Port F, Bit 4**

ADC4, Analog to Digital Converter, Channel 4.

TCK, JTAG Test Clock: JTAG operation is synchronous to TCK. When the JTAG interface is enabled, this pin can not be used as an I/O pin.

- **ADC3 – ADC0 – Port F, Bit 3:0**

Analog to Digital Converter, Channel 3:0.

Table 13-19. Overriding Signals for Alternate Functions in PF7:PF4

Signal Name	PF7/ADC7/TDI	PF6/ADC6/TDO	PF5/ADC5/TMS	PF4/ADC4/TCK
PUOE	JTAGEN	JTAGEN	JTAGEN	JTAGEN
PUOV	1	0	1	1
DDOE	JTAGEN	JTAGEN	JTAGEN	JTAGEN
DDOV	0	SHIFT_IR + SHIFT_DR	0	0
PVOE	0	JTAGEN	0	0
PVOV	0	TDO	0	0
DIEOE	JTAGEN	JTAGEN	JTAGEN	JTAGEN
DIEOV	0	0	0	0
DI	–	–	–	–
AIO	TDI/ADC7 INPUT	ADC6 INPUT	TMS/ADC5 INPUT	TCK/ADC4 INPUT

Table 13-20. Overriding Signals for Alternate Functions in PF3:PF0

Signal Name	PF3/ADC3	PF2/ADC2	PF1/ADC1	PF0/ADC0
PUOE	0	0	0	0
PUOV	0	0	0	0
DDOE	0	0	0	0
DDOV	0	0	0	0
PVOE	0	0	0	0
PVOV	0	0	0	0
DIEOE	0	0	0	0
DIEOV	0	0	0	0
DI	–	–	–	–
AIO	ADC3 INPUT	ADC2 INPUT	ADC1 INPUT	ADC0 INPUT

13.3.7 Alternate Functions of Port G

The Port G alternate pin configuration is as follows:

Table 13-21. Port G Pins Alternate Functions

Port Pin	Alternate Function
PG5	OC0B (Output Compare and PWM Output B for Timer/Counter0)
PG4	TOSC1 (RTC Oscillator Timer/Counter2)
PG3	TOSC2 (RTC Oscillator Timer/Counter2)
PG2	ALE (Address Latch Enable to external memory)
PG1	$\overline{RD}$ (Read strobe to external memory)
PG0	$\overline{WR}$ (Write strobe to external memory)

- **OC0B – Port G, Bit 5**

OC0B, Output Compare match B output: The PG5 pin can serve as an external output for the TImer/Counter0 Output Compare. The pin has to be configured as an output (DDG5 set) to serve this function. The OC0B pin is also the output pin for the PWM mode timer function.

- **TOSC1 – Port G, Bit 4**

TOSC2, Timer Oscillator pin 1: When the AS2 bit in ASSR is set (one) to enable asynchronous clocking of Timer/Counter2, pin PG4 is disconnected from the port, and becomes the input of the inverting Oscillator amplifier. In this mode, a Crystal Oscillator is connected to this pin, and the pin can not be used as an I/O pin.

- **TOSC2 – Port G, Bit 3**

TOSC2, Timer Oscillator pin 2: When the AS2 bit in ASSR is set (one) to enable asynchronous clocking of Timer/Counter2, pin PG3 is disconnected from the port, and becomes the inverting output of the Oscillator amplifier. In this mode, a Crystal Oscillator is connected to this pin, and the pin can not be used as an I/O pin.

- **ALE – Port G, Bit 2**

ALE is the external data memory Address Latch Enable signal.

- **RD – Port G, Bit 1**

$\overline{\text{RD}}$ is the external data memory read control strobe.

- **WR – Port G, Bit 0**

$\overline{\text{WR}}$ is the external data memory write control strobe.

Table 13-22 on page 87 and Table 13-23 on page 88 relates the alternate functions of Port G to the overriding signals shown in Figure 13-5 on page 73.

Table 13-22. Overriding Signals for Alternate Functions in PG5:PG4

Signal Name	—	—	PG5/OC0B	PG4/TOSC1
PUOE	–	–	–	AS2
PUOV	–	–	–	0
DDOE	–	–	–	AS2
DDOV	–	–	–	0
PVOE	–	–	OC0B Enable	0
PVOV	–	–	OC0B	0
PTOE	–	–	–	–
DIEOE	–	–	–	AS2
DIEOV	–	–	–	EXCLK
DI	–	–	–	–
AIO	–	–	–	T/C2 OSC INPUT

Table 13-23. Overriding Signals for Alternate Functions in PG3:PG0

Signal Name	PG3/TOSC2	PG2/ALE/A7	PG1/RD	PG0/WR
PUOE	AS2 • $\overline{\text{EXCLK}}$	SRE	SRE	SRE
PUOV	0	0	0	0
DDOE	AS2 • $\overline{\text{EXCLK}}$	SRE	SRE	SRE
DDOV	0	1	1	1
PVOE	0	SRE	SRE	SRE
PVOV	0	ALE	RD	WR
PTOE	–	–	–	–
DIEOE	AS2 • $\overline{\text{EXCLK}}$	0	0	0
DIEOV	0	0	0	0
DI	–	–	–	–
AIO	T/C2 OSC OUTPUT	–	–	–

13.3.8 Alternate Functions of Port H

The Port H alternate pin configuration is as follows:

Table 13-24. Port H Pins Alternate Functions

Port Pin	Alternate Function
PH7	T4 (Timer/Counter4 Clock Input)
PH6	OC2B (Output Compare and PWM Output B for Timer/Counter2)
PH5	OC4C (Output Compare and PWM Output C for Timer/Counter4)
PH4	OC4B (Output Compare and PWM Output B for Timer/Counter4)
PH3	OC4A (Output Compare and PWM Output A for Timer/Counter4)
PH2	XCK2 (USART2 External Clock)
PH1	TXD2 (USART2 Transmit Pin)
PH0	RXD2 (USART2 Receive Pin)

- **T4 – Port H, Bit 7**

T4, Timer/Counter4 counter source.

- **OC2B – Port H, Bit 6**

OC2B, Output Compare Match B output: The PH6 pin can serve as an external output for the Timer/Counter2 Output Compare B. The pin has to be configured as an output (DDH6 set) to serve this function. The OC2B pin is also the output pin for the PWM mode timer function.

- **OC4C – Port H, Bit 5**

OC4C, Output Compare Match C output: The PH5 pin can serve as an external output for the Timer/Counter4 Output Compare C. The pin has to be configured as an output (DDH5 set) to serve this function. The OC4C pin is also the output pin for the PWM mode timer function.

- **OC4B – Port H, Bit 4**

OC4B, Output Compare Match B output: The PH4 pin can serve as an external output for the Timer/Counter2 Output Compare B. The pin has to be configured as an output (DDH4 set) to serve this function. The OC4B pin is also the output pin for the PWM mode timer function.

- **OC4A – Port H, Bit 3**

OC4C, Output Compare Match A output: The PH3 pin can serve as an external output for the Timer/Counter4 Output Compare A. The pin has to be configured as an output (DDH3 set) to serve this function. The OC4A pin is also the output pin for the PWM mode timer function.

- **XCK2 – Port H, Bit 2**

XCK2, USART2 External Clock: The Data Direction Register (DDH2) controls whether the clock is output (DDH2 set) or input (DDH2 cleared). The XC2K pin is active only when the USART2 operates in synchronous mode.

- **TXD2 – Port H, Bit 1**

TXD2, USART2 Transmit Pin.

- **RXD2 – Port H, Bit 0**

RXD2, USART2 Receive pin: Receive Data (Data input pin for the USART2). When the USART2 Receiver is enabled, this pin is configured as an input regardless of the value of DDH0. When the USART2 forces this pin to be an input, a logical on in PORTH0 will turn on the internal pull-up.

Table 13-25. Overriding Signals for Alternate Functions in PH7:PH4

Signal Name	PH7/T4	PH6/OC2B	PH5/OC4C	PH4/OC4B
PUOE	0	0	0	0
PUOV	0	0	0	0
DDOE	0	0	0	0
DDOV	0	0	0	0
PVOE	0	OC2B ENABLE	OC4C ENABLE	OC4B ENABLE
PVOV	0	OC2B	OC4C	OC4B
PTOE	–	–	–	–
DIEOE	0	0	0	0
DIEOV	0	0	0	0
DI	T4 INPUT	0	0	0
AIO	–	–	–	–

Table 13-26. Overriding Signals for Alternate Functions in PH3:PH0

Signal Name	PH3/OC4A	PH2/XCK2	PH1/TXD2	PH0/RXD2
PUOE	0	0	TXEN2	RXEN2
PUOV	0	0	0	PORTH0 • **PUD**
DDOE	0	XCK2 OUTPUT ENABLE	TXEN2	RXEN2
DDOV	0	1	1	0
PVOE	OC4A ENABLE	XCK2 OUTPUT ENABLE	TXEN2	0
PVOV	OC4A	XCK2	TXD2	0
PTOE	–	–	–	–
DIEOE	0	0	0	0
DIEOV	0	0	0	0
DI	0	XC2K INPUT	0	RXD2
AIO	–	–	–	–

13.3.9 Alternate Functions of Port J

The Port J alternate pin configuration is as follows:

Table 13-27. Port J Pins Alternate Functions

Port Pin	Alternate Function
PJ7	–
PJ6	PCINT15 (Pin Change Interrupt 15)
PJ5	PCINT14 (Pin Change Interrupt 14)
PJ4	PCINT13 (Pin Change Interrupt 13)
PJ3	PCINT12 (Pin Change Interrupt 12)
PJ2	XCK3/PCINT11 (USART3 External Clock or Pin Change Interrupt 11)
PJ1	TXD3/PCINT10 (USART3 Transmit Pin or Pin Change Interrupt 10)
PJ0	RXD3/PCINT9 (USART3 Receive Pin or Pin Change Interrupt 9)

- **PCINT15:12 - Port J, Bit 6:3**

PCINT15:12, Pin Change Interrupt Source 15:12. The PJ6:3 pins can serve as External Interrupt Sources.

- **XCK2/PCINT11 - Port J, Bit 2**

XCK2, USART 2 External Clock. The Data Direction Register (DDJ2) controls whether the clock is output (DDJ2 set) or input (DDJ2 cleared). The XCK2 pin is active only when the USART2 operates in synchronous mode.

PCINT11, Pin Change Interrupt Source 11. The PJ2 pin can serve as External Interrupt Sources.

- **TXD3/PCINT10 - Port J, Bit 1**

TXD3, USART3 Transmit pin.

PCINT10, Pin Change Interrupt Source 10. The PJ1 pin can serve as External Interrupt Sources.

- **RXD3/PCINT9 - Port J, Bit 0**

RXD3, USART3 Receive pin. Receive Data (Data input pin for the USART3). When the USART3 Receiver is enabled, this pin is configured as an input regardless of the value of DDJ0. When the USART3 forces this pin to be an input, a logical one in PORTJ0 will turn on the internal pull-up.

PCINT9, Pin Change Interrupt Source 9. The PJ0 pin can serve as External Interrupt Sources.

Table 13-28 on page 92 and Table 13-29 on page 92 relates the alternate functions of Port J to the overriding signals shown in Figure 13-5 on page 73.

Table 13-28. Overriding Signals for Alternate Functions in PJ7:PJ4

Signal Name	PJ7	PJ6/ PCINT15	PJ5/ PCINT14	PJ4/ PCINT13
PUOE	0	0	0	0
PUOV	0	0	0	0
DDOE	0	0	0	0
DDOV	0	0	0	0
PVOE	0	0	0	0
PVOV	0	0	0	0
PTOE	-	-	-	-
DIEOE	0	PCINT15·PCIE1	PCINT14·PCIE1	PCINT13·PCIE1
DIEOV	0	1	1	1
DI	0	PCINT15 INPUT	PCINT14 INPUT	PCINT13 INPUT
AIO	-	-	-	-

Table 13-29. Overriding Signals for Alternate Functions in PJ3:PJ0

Signal Name	PJ3/PCINT12	PJ2/XCK3/PCINT11	PJ1/TXD3/PCINT10	PJ0/RXD3/PCINT9
PUOE	0	0	TXEN3	RXEN3
PUOV	0	0	0	PORTJ0·$\overline{\text{PUD}}$
DDOE	0	XCK3 OUTPUT ENABLE	TXEN3	RXEN3
DDOV	0	1	1	0
PVOE	0	XCK3 OUTPUT ENABLE	TXEN3	0
PVOV	0	XCK3	TXD3	0
PTOE	-	-	-	-
DIEOE	PCINT12·PCIE1	PCINT11·PCIE1	PCINT10·PCIE1	PCINT9·PCIE1
DIEOV	1	1	1	1
DI	PCINT12 INPUT	PCINT11 INPUT XCK3 INPUT	PCINT10 INPUT	PCINT9 INPUT RXD3
AIO	-	-	-	-

13.3.10 Alternate Functions of Port K

The Port K alternate pin configuration is as follows:

Table 13-30. Port K Pins Alternate Functions

Port Pin	Alternate Function
PK7	ADC15/PCINT23 (ADC Input Channel 15 or Pin Change Interrupt 23)
PK6	ADC14/PCINT22 (ADC Input Channel 14 or Pin Change Interrupt 22)
PK5	ADC13/PCINT21 (ADC Input Channel 13 or Pin Change Interrupt 21)

Table 13-30. Port K Pins Alternate Functions (Continued)

Port Pin	Alternate Function
PK4	ADC12/PCINT20 (ADC Input Channel 12 or Pin Change Interrupt 20)
PK3	ADC11/PCINT19 (ADC Input Channel 11 or Pin Change Interrupt 19)
PK2	ADC10/PCINT18 (ADC Input Channel 10 or Pin Change Interrupt 18)
PK1	ADC9/PCINT17 (ADC Input Channel 9 or Pin Change Interrupt 17)
PK0	ADC8 /PCINT16 (ADC Input Channel 8 or Pin Change Interrupt 16)

- **ADC15:8/PCINT23:16 – Port K, Bit 7:0**

ADC15:8, Analog to Digital Converter, Channel 15 - 8.

PCINT23:16, Pin Change Interrupt Source 23:16. The PK7:0 pins can serve as External Interrupt Sources.

Table 13-31. Overriding Signals for Alternate Functions in PK7:PK4

Signal Name	PK7/ADC15/PCINT23	PK6/ADC14/PCINT22	PK5/ADC13/PCINT21	PK4/ADC12/PCINT20
PUOE	0	0	0	0
PUOV	0	0	0	0
DDOE	0	0	0	0
DDOV	0	0	0	0
PVOE	0	0	0	0
PVOV	0	0	0	0
PTOE	–	–	–	–
DIEOE	PCINT23 • PCIE2	PCINT22 • PCIE2	PCINT21 • PCIE2	PCINT20 • PCIE2
DIEOV	1	1	1	1
DI	PCINT23 INPUT	PCINT22 INPUT	PCINT21 INPUT	PCINT20 INPUT
AIO	ADC15 INPUT	ADC14 INPUT	ADC13 INPUT	ADC12 INPUT

Table 13-32. Overriding Signals for Alternate Functions in PK3:PK0

Signal Name	PK3/ADC11/PCINT19	PK2/ADC10/PCINT18	PK1/ADC9/PCINT17	PK0/ADC8/PCINT16
PUOE	0	0	0	0
PUOV	0	0	0	0
DDOE	0	0	0	0
DDOV	0	0	0	0
PVOE	0	0	0	0
PVOV	0	0	0	0
PTOE	–	–	–	–
DIEOE	PCINT19 • PCIE2	PCINT18 • PCIE2	PCINT17 • PCIE2	PCINT16 • PCIE2
DIEOV	1	1	1	1
DI	PCINT19 INPUT	PCINT18 INPUT	PCINT17 INPUT	PCINT16 INPUT
AIO	ADC11 INPUT	ADC10INPUT	ADC9 INPUT	ADC8 INPUT

13.3.11 Alternate Functions of Port L

The Port L alternate pin configuration is as follows:

Table 13-33. Port L Pins Alternate Functions

Port Pin	Alternate Function
PL7	–
PL6	–
PL5	OC5C (Output Compare and PWM Output C for Timer/Counter5)
PL4	OC5B (Output Compare and PWM Output B for Timer/Counter5)
PL3	OC5A (Output Compare and PWM Output A for Timer/Counter5)
PL2	T5 (Timer/Counter5 Clock Input)
PL1	ICP5 (Timer/Counter5 Input Capture Trigger)
PL0	ICP4 (Timer/Counter4 Input Capture Trigger)

- **OC5C – Port L, Bit 5**

OC5C, Output Compare Match C output: The PL5 pin can serve as an external output for the Timer/Counter5 Output Compare C. The pin has to be configured as an output (DDL5 set) to serve this function. The OC5C pin is also the output pin for the PWM mode timer function.

- **OC5B – Port L, Bit 4**

OC5B, Output Compare Match B output: The PL4 pin can serve as an external output for the Timer/Counter 5 Output Compare B. The pin has to be configured as an output (DDL4 set) to serve this function. The OC5B pin is also the output pin for the PWM mode timer function.

- **OC5A – Port L, Bit 3**

OC5A, Output Compare Match A output: The PL3 pin can serve as an external output for the Timer/Counter 5 Output Compare A. The pin has to be configured as an output (DDL3 set) to serve this function. The OC5A pin is also the output pin for the PWM mode timer function.

- **T5 – Port L, Bit 2**

T5, Timer/Counter5 counter source.

- **ICP5 – Port L, Bit 1**

ICP5, Input Capture Pin 5: The PL1 pin can serve as an Input Capture pin for Timer/Counter5.

- **ICP4 – Port L, Bit 0**

ICP4, Input Capture Pin 4: The PL0 pin can serve as an Input Capture pin for Timer/Counter4.

Table 13-34 and Table 13-35 relates the alternate functions of Port L to the overriding signals shown in Figure 13-5 on page 73.

Table 13-34. Overriding Signals for Alternate Functions in PL7:PL4

Signal Name	PL7	PL6	PL5/OC5C	PL4/OC5B
PUOE	0	0	0	0
PUOV	0	0	0	0
DDOE	–	–	0	0
DDOV	–	–	0	0
PVOE	–	–	OC5C ENABLE	OC5B ENABLE
PVOV	–	–	OC5C	OC5B
PTOE	–	–	–	–
DIEOE	0	0	0	0
DIEOV	0	0	0	0
DI	0	0	0	0
AIO	–	–	–	–

Table 13-35. Overriding Signals for Alternate Functions in PL3:PL0

Signal Name	PL3/OC5A	PL2/T5	PL1/ICP5	PL0/ICP4
PUOE	0	0	0	0
PUOV	0	0	0	0
DDOE	0	0	0	0
DDOV	0	0	0	0
PVOE	OC5A ENABLE	0	0	0
PVOV	OC5A	0	0	0
PTOE	–	–	–	–
DIEOE	0	0	0	0
DIEOV	0	0	0	0
DI	0	T5 INPUT	ICP5 INPUT	ICP4 INPUT
AIO	–	–	–	–

13.4 Register Description for I/O-Ports

13.4.1 MCUCR – MCU Control Register

Bit	7	6	5	4	3	2	1	0	
0x35 (0x55)	JTD	–	–	PUD	–	–	IVSEL	IVCE	MCUCR
Read/Write	R/W	R	R	R/W	R	R	R/W	R/W	
Initial Value	0	0	0	0	0	0	0	0	

- **Bit 4 – PUD: Pull-up Disable**

When this bit is written to one, the I/O ports pull-up resistors are disabled even if the DDxn and PORTxn Registers are configured to enable the pull-up resistor ({DDxn, PORTxn} = 0b01). See "Configuring the Pin" on page 68 for more details about this feature.

13.4.2 PORTA – Port A Data Register

Bit	7	6	5	4	3	2	1	0	
0x02 (0x22)	PORTA7	PORTA6	PORTA5	PORTA4	PORTA3	PORTA2	PORTA1	PORTA0	PORTA
Read/Write	R/W	R/W	R/W	R/W	R/W	R/W	R/W	R/W	
Initial Value	0	0	0	0	0	0	0	0	

13.4.3 DDRA – Port A Data Direction Register

Bit	7	6	5	4	3	2	1	0	
0x01 (0x21)	DDA7	DDA6	DDA5	DDA4	DDA3	DDA2	DDA1	DDA0	DDRA
Read/Write	R/W	R/W	R/W	R/W	R/W	R/W	R/W	R/W	
Initial Value	0	0	0	0	0	0	0	0	

13.4.4 PINA – Port A Input Pins Address

Bit	7	6	5	4	3	2	1	0	
0x00 (0x20)	PINA7	PINA6	PINA5	PINA4	PINA3	PINA2	PINA1	PINA0	PINA
Read/Write	R/W	R/W	R/W	R/W	R/W	R/W	R/W	R/W	
Initial Value	N/A	N/A	N/A	N/A	N/A	N/A	N/A	N/A	

13.4.5 PORTB – Port B Data Register

Bit	7	6	5	4	3	2	1	0	
0x05 (0x25)	PORTB7	PORTB6	PORTB5	PORTB4	PORTB3	PORTB2	PORTB1	PORTB0	PORTB
Read/Write	R/W	R/W	R/W	R/W	R/W	R/W	R/W	R/W	
Initial Value	0	0	0	0	0	0	0	0	

13.4.6 DDRB – Port B Data Direction Register

Bit	7	6	5	4	3	2	1	0	
0x04 (0x24)	DDB7	DDB6	DDB5	DDB4	DDB3	DDB2	DDB1	DDB0	DDRB
Read/Write	R/W	R/W	R/W	R/W	R/W	R/W	R/W	R/W	
Initial Value	0	0	0	0	0	0	0	0	

13.4.7 PINB – Port B Input Pins Address

Bit	7	6	5	4	3	2	1	0	
0x03 (0x23)	PINB7	PINB6	PINB5	PINB4	PINB3	PINB2	PINB1	PINB0	PINB
Read/Write	R/W	R/W	R/W	R/W	R/W	R/W	R/W	R/W	
Initial Value	N/A	N/A	N/A	N/A	N/A	N/A	N/A	N/A	

13.4.8 PORTC – Port C Data Register

Bit	7	6	5	4	3	2	1	0	
0x08 (0x28)	PORTC7	PORTC6	PORTC5	PORTC4	PORTC3	PORTC2	PORTC1	PORTC0	PORTC
Read/Write	R/W	R/W	R/W	R/W	R/W	R/W	R/W	R/W	
Initial Value	0	0	0	0	0	0	0	0	

13.4.9 DDRC – Port C Data Direction Register

Bit	7	6	5	4	3	2	1	0	
0x07 (0x27)	DDC7	DDC6	DDC5	DDC4	DDC3	DDC2	DDC1	DDC0	DDRC
Read/Write	R/W	R/W	R/W	R/W	R/W	R/W	R/W	R/W	
Initial Value	0	0	0	0	0	0	0	0	

13.4.10 PINC– Port C Input Pins Address

Bit	7	6	5	4	3	2	1	0	
0x06 (0x26)	PINC7	PINC6	PINC5	PINC4	PINC3	PINC2	PINC1	PINC0	PINC
Read/Write	R/W	R/W	R/W	R/W	R/W	R/W	R/W	R/W	
Initial Value	N/A	N/A	N/A	N/A	N/A	N/A	N/A	N/A	

13.4.11 PORTD – Port D Data Register

Bit	7	6	5	4	3	2	1	0	
0x0B (0x2B)	PORTD7	PORTD6	PORTD5	PORTD4	PORTD3	PORTD2	PORTD1	PORTD0	PORTD
Read/Write	R/W	R/W	R/W	R/W	R/W	R/W	R/W	R/W	
Initial Value	0	0	0	0	0	0	0	0	

13.4.12 DDRD – Port D Data Direction Register

Bit	7	6	5	4	3	2	1	0	
0x0A (0x2A)	DDD7	DDD6	DDD5	DDD4	DDD3	DDD2	DDD1	DDD0	DDRD
Read/Write	R/W	R/W	R/W	R/W	R/W	R/W	R/W	R/W	
Initial Value	0	0	0	0	0	0	0	0	

13.4.13 PIND – Port D Input Pins Address

Bit	7	6	5	4	3	2	1	0	
0x09 (0x29)	PIND7	PIND6	PIND5	PIND4	PIND3	PIND2	PIND1	PIND0	PIND
Read/Write	R/W	R/W	R/W	R/W	R/W	R/W	R/W	R/W	
Initial Value	N/A	N/A	N/A	N/A	N/A	N/A	N/A	N/A	

13.4.14 PORTE – Port E Data Register

Bit	7	6	5	4	3	2	1	0	
0x0E (0x2E)	PORTE7	PORTE6	PORTE5	PORTE4	PORTE3	PORTE2	PORTE1	PORTE0	PORTE
Read/Write	R/W	R/W	R/W	R/W	R/W	R/W	R/W	R/W	
Initial Value	0	0	0	0	0	0	0	0	

13.4.15 DDRE – Port E Data Direction Register

Bit	7	6	5	4	3	2	1	0	
0x0D (0x2D)	DDE7	DDE6	DDE5	DDE4	DDE3	DDE2	DDE1	DDE0	DDRE
Read/Write	R/W	R/W	R/W	R/W	R/W	R/W	R/W	R/W	
Initial Value	0	0	0	0	0	0	0	0	

13.4.16 PINE – Port E Input Pins Address

Bit	7	6	5	4	3	2	1	0	
0x0C (0x2C)	PINE7	PINE6	PINE5	PINE4	PINE3	PINE2	PINE1	PINE0	PINE
Read/Write	R/W	R/W	R/W	R/W	R/W	R/W	R/W	R/W	
Initial Value	N/A	N/A	N/A	N/A	N/A	N/A	N/A	N/A	

13.4.17 PORTF – Port F Data Register

Bit	7	6	5	4	3	2	1	0	
0x11 (0x31)	PORTF7	PORTF6	PORTF5	PORTF4	PORTF3	PORTF2	PORTF1	PORTF0	PORTF
Read/Write	R/W	R/W	R/W	R/W	R/W	R/W	R/W	R/W	
Initial Value	0	0	0	0	0	0	0	0	

13.4.18 DDRF – Port F Data Direction Register

Bit	7	6	5	4	3	2	1	0	
0x10 (0x30)	DDF7	DDF6	DDF5	DDF4	DDF3	DDF2	DDF1	DDF0	DDRF
Read/Write	R/W	R/W	R/W	R/W	R/W	R/W	R/W	R/W	
Initial Value	0	0	0	0	0	0	0	0	

13.4.19 PINF – Port F Input Pins Address

Bit	7	6	5	4	3	2	1	0	
0x0F (0x2F)	PINF7	PINF6	PINF5	PINF4	PINF3	PINF2	PINF1	PINF0	PINF
Read/Write	R/W	R/W	R/W	R/W	R/W	R/W	R/W	R/W	
Initial Value	N/A	N/A	N/A	N/A	N/A	N/A	N/A	N/A	

13.4.20 PORTG – Port G Data Register

Bit	7	6	5	4	3	2	1	0	
0x14 (0x34)	–	–	PORTG5	PORTG4	PORTG3	PORTG2	PORTG1	PORTG0	PORTG
Read/Write	R	R	R/W	R/W	R/W	R/W	R/W	R/W	
Initial Value	0	0	0	0	0	0	0	0	

13.4.21 DDRG – Port G Data Direction Register

Bit	7	6	5	4	3	2	1	0	
0x13 (0x33)	–	–	DDG5	DDG4	DDG3	DDG2	DDG1	DDG0	DDRG
Read/Write	R	R	R/W	R/W	R/W	R/W	R/W	R/W	
Initial Value	0	0	0	0	0	0	0	0	

13.4.22 PING – Port G Input Pins Address

Bit	7	6	5	4	3	2	1	0	
0x12 (0x32)	–	–	PING5	PING4	PING3	PING2	PING1	PING0	PING
Read/Write	R	R	R/W	R/W	R/W	R/W	R/W	R/W	
Initial Value	0	0	N/A	N/A	N/A	N/A	N/A	N/A	

13.4.23 PORTH – Port H Data Register

Bit	7	6	5	4	3	2	1	0	
(0x102)	PORTH7	PORTH6	PORTH5	PORTH4	PORTH3	PORTH2	PORTH1	PORTH0	PORTH
Read/Write	R/W	R/W	R/W	R/W	R/W	R/W	R/W	R/W	
Initial Value	0	0	0	0	0	0	0	0	

13.4.24 DDRH – Port H Data Direction Register

Bit	7	6	5	4	3	2	1	0	
(0x101)	**DDH7**	**DDH6**	**DDH5**	**DDH4**	**DDH3**	**DDH2**	**DDH1**	**DDH0**	**DDRH**
Read/Write	R/W	R/W	R/W	R/W	R/W	R/W	R/W	R/W	
Initial Value	0	0	0	0	0	0	0	0	

13.4.25 PINH – Port H Input Pins Address

Bit	7	6	5	4	3	2	1	0	
(0x100)	**PINH5**	**PINH5**	**PINH5**	**PINH4**	**PINH3**	**PINGH**	**PINH1**	**PINH0**	**PINH**
Read/Write	R/W	R/W	R/W	R/W	R/W	R/W	R/W	R/W	
Initial Value	N/A	N/A	N/A	N/A	N/A	N/A	N/A	N/A	

13.4.26 PORTJ – Port J Data Register

Bit	7	6	5	4	3	2	1	0	
(0x105)	**PORTJ7**	**PORTJ6**	**PORTJ5**	**PORTJ4**	**PORTJ3**	**PORTJ2**	**PORTJ1**	**PORTJ0**	**PORTJ**
Read/Write	R/W	R/W	R/W	R/W	R/W	R/W	R/W	R/W	
Initial Value	0	0	0	0	0	0	0	0	

13.4.27 DDRJ – Port J Data Direction Register

Bit	7	6	5	4	3	2	1	0	
(0x104)	**DDJ7**	**DDJ6**	**DDJ5**	**DDJ4**	**DDJ3**	**DDJ2**	**DDJ1**	**DDJ0**	**DDRJ**
Read/Write	R/W	R/W	R/W	R/W	R/W	R/W	R/W	R/W	
Initial Value	0	0	0	0	0	0	0	0	

13.4.28 PINJ – Port J Input Pins Address

Bit	7	6	5	4	3	2	1	0	
(0x103)	**PINJ5**	**PINJ5**	**PINJ5**	**PINJ4**	**PINJ3**	**PINGJ**	**PINJ1**	**PINJ0**	**PINJ**
Read/Write	R/W	R/W	R/W	R/W	R/W	R/W	R/W	R/W	
Initial Value	N/A	N/A	N/A	N/A	N/A	N/A	N/A	N/A	

13.4.29 PORTK – Port K Data Register

Bit	7	6	5	4	3	2	1	0	
(0x108)	**PORTK7**	**PORTK6**	**PORTK5**	**PORTK4**	**PORTK3**	**PORTK2**	**PORTK1**	**PORTK0**	**PORTK**
Read/Write	R/W	R/W	R/W	R/W	R/W	R/W	R/W	R/W	
Initial Value	0	0	0	0	0	0	0	0	

13.4.30 DDRK – Port K Data Direction Register

Bit	7	6	5	4	3	2	1	0	
(0x107)	**DDK7**	**DDK6**	**DDK5**	**DDK4**	**DDK3**	**DDK2**	**DDK1**	**DDK0**	**DDRK**
Read/Write	R/W	R/W	R/W	R/W	R/W	R/W	R/W	R/W	
Initial Value	0	0	0	0	0	0	0	0	

13.4.31 PINK – Port K Input Pins Address

Bit	7	6	5	4	3	2	1	0	
(0x106)	**PINK5**	**PINK5**	**PINK5**	**PINK4**	**PINK3**	**PINGK**	**PINK1**	**PINK0**	**PINK**
Read/Write	R/W	R/W	R/W	R/W	R/W	R/W	R/W	R/W	
Initial Value	N/A	N/A	N/A	N/A	N/A	N/A	N/A	N/A	

13.4.32 PORTL – Port L Data Register

Bit	7	6	5	4	3	2	1	0	
(0x10B)	**PORTL7**	**PORTL6**	**PORTL5**	**PORTL4**	**PORTL3**	**PORTL2**	**PORTL1**	**PORTL0**	**PORTL**
Read/Write	R/W	R/W	R/W	R/W	R/W	R/W	R/W	R/W	
Initial Value	0	0	0	0	0	0	0	0	

13.4.33 DDRL – Port L Data Direction Register

Bit	7	6	5	4	3	2	1	0	
(0x10A)	**DDL7**	**DDL6**	**DDL5**	**DDL4**	**DDL3**	**DDL2**	**DDL1**	**DDL0**	**DDRL**
Read/Write	R/W	R/W	R/W	R/W	R/W	R/W	R/W	R/W	
Initial Value	0	0	0	0	0	0	0	0	

13.4.34 PINL – Port L Input Pins Address

Bit	7	6	5	4	3	2	1	0	
(0x109)	**PINL5**	**PINL5**	**PINL5**	**PINL4**	**PINL3**	**PINGL**	**PINL1**	**PINL0**	**PINL**
Read/Write	R/W	R/W	R/W	R/W	R/W	R/W	R/W	R/W	
Initial Value	N/A	N/A	N/A	N/A	N/A	N/A	N/A	N/A	

14. Interrupts

This section describes the specifics of the interrupt handling as performed in ATmega640/1280/1281/2560/2561. For a general explanation of the AVR interrupt handling, refer to "Reset and Interrupt Handling" on page 17.

14.1 Interrupt Vectors in ATmega640/1280/1281/2560/2561

Table 14-1. Reset and Interrupt Vectors

Vector No.	Program Address[2]	Source	Interrupt Definition
1	$0000[1]	RESET	External Pin, Power-on Reset, Brown-out Reset, Watchdog Reset, and JTAG AVR Reset
2	$0002	INT0	External Interrupt Request 0
3	$0004	INT1	External Interrupt Request 1
4	$0006	INT2	External Interrupt Request 2
5	$0008	INT3	External Interrupt Request 3
6	$000A	INT4	External Interrupt Request 4
7	$000C	INT5	External Interrupt Request 5
8	$000E	INT6	External Interrupt Request 6
9	$0010	INT7	External Interrupt Request 7
10	$0012	PCINT0	Pin Change Interrupt Request 0
11	$0014	PCINT1	Pin Change Interrupt Request 1
12	$0016[3]	PCINT2	Pin Change Interrupt Request 2
13	$0018	WDT	Watchdog Time-out Interrupt
14	$001A	TIMER2 COMPA	Timer/Counter2 Compare Match A
15	$001C	TIMER2 COMPB	Timer/Counter2 Compare Match B
16	$001E	TIMER2 OVF	Timer/Counter2 Overflow
17	$0020	TIMER1 CAPT	Timer/Counter1 Capture Event
18	$0022	TIMER1 COMPA	Timer/Counter1 Compare Match A
19	$0024	TIMER1 COMPB	Timer/Counter1 Compare Match B
20	$0026	TIMER1 COMPC	Timer/Counter1 Compare Match C
21	$0028	TIMER1 OVF	Timer/Counter1 Overflow
22	$002A	TIMER0 COMPA	Timer/Counter0 Compare Match A
23	$002C	TIMER0 COMPB	Timer/Counter0 Compare match B
24	$002E	TIMER0 OVF	Timer/Counter0 Overflow
25	$0030	SPI, STC	SPI Serial Transfer Complete
26	$0032	USART0 RX	USART0 Rx Complete
27	$0034	USART0 UDRE	USART0 Data Register Empty
28	$0036	USART0 TX	USART0 Tx Complete
29	$0038	ANALOG COMP	Analog Comparator
30	$003A	ADC	ADC Conversion Complete

Table 14-1. Reset and Interrupt Vectors (Continued)

Vector No.	Program Address[2]	Source	Interrupt Definition
31	$003C	EE READY	EEPROM Ready
32	$003E	TIMER3 CAPT	Timer/Counter3 Capture Event
33	$0040	TIMER3 COMPA	Timer/Counter3 Compare Match A
34	$0042	TIMER3 COMPB	Timer/Counter3 Compare Match B
35	$0044	TIMER3 COMPC	Timer/Counter3 Compare Match C
36	$0046	TIMER3 OVF	Timer/Counter3 Overflow
37	$0048	USART1 RX	USART1 Rx Complete
38	$004A	USART1 UDRE	USART1 Data Register Empty
39	$004C	USART1 TX	USART1 Tx Complete
40	$004E	TWI	2-wire Serial Interface
41	$0050	SPM READY	Store Program Memory Ready
42	$0052[3]	TIMER4 CAPT	Timer/Counter4 Capture Event
43	$0054	TIMER4 COMPA	Timer/Counter4 Compare Match A
44	$0056	TIMER4 COMPB	Timer/Counter4 Compare Match B
45	$0058	TIMER4 COMPC	Timer/Counter4 Compare Match C
46	$005A	TIMER4 OVF	Timer/Counter4 Overflow
47	$005C[3]	TIMER5 CAPT	Timer/Counter5 Capture Event
48	$005E	TIMER5 COMPA	Timer/Counter5 Compare Match A
49	$0060	TIMER5 COMPB	Timer/Counter5 Compare Match B
50	$0062	TIMER5 COMPC	Timer/Counter5 Compare Match C
51	$0064	TIMER5 OVF	Timer/Counter5 Overflow
52	$0066[3]	USART2 RX	USART2 Rx Complete
53	$0068[3]	USART2 UDRE	USART2 Data Register Empty
54	$006A[3]	USART2 TX	USART2 Tx Complete
55	$006C[3]	USART3 RX	USART3 Rx Complete
56	$006E[3]	USART3 UDRE	USART3 Data Register Empty
57	$0070[3]	USART3 TX	USART3 Tx Complete

Notes:
1. When the BOOTRST Fuse is programmed, the device will jump to the Boot Loader address at reset, see "Memory Programming" on page 325.
2. When the IVSEL bit in MCUCR is set, Interrupt Vectors will be moved to the start of the Boot Flash Section. The address of each Interrupt Vector will then be the address in this table added to the start address of the Boot Flash Section.
3. Only available in ATmega640/1280/2560.

14.2 Reset and Interrupt Vector placement

Table 14-2 on page 103 shows Reset and Interrupt Vectors placement for the various combinations of BOOTRST and IVSEL settings. If the program never enables an interrupt source, the Interrupt Vectors are not used, and regular program code can be placed at these locations. This is also the case if the Reset Vector is in the Application section while the Interrupt Vectors are in the Boot section or vice versa.

Table 14-2. Reset and Interrupt Vectors Placement[1]

BOOTRST	IVSEL	Reset Address	Interrupt Vectors Start Address
1	0	0x0000	0x0002
1	1	0x0000	Boot Reset Address + 0x0002
0	0	Boot Reset Address	0x0002
0	1	Boot Reset Address	Boot Reset Address + 0x0002

Note: 1. The Boot Reset Address is shown in Table 29-7 on page 320 through Table 29-15 on page 322. For the BOOTRST Fuse “1” means unprogrammed while “0” means programmed.

The most typical and general program setup for the Reset and Interrupt Vector Addresses in ATmega640/1280/1281/2560/2561 is:

```
Address     Labels     Code                          Comments
0x0000                 jmp     RESET                 ; Reset Handler
0x0002                 jmp     INT0                  ; IRQ0 Handler
0x0004                 jmp     INT1                  ; IRQ1 Handler
0x0006                 jmp     INT2                  ; IRQ2 Handler
0x0008                 jmp     INT3                  ; IRQ3 Handler
0x000A                 jmp     INT4                  ; IRQ4 Handler
0x000C                 jmp     INT5                  ; IRQ5 Handler
0x000E                 jmp     INT6                  ; IRQ6 Handler
0x0010                 jmp     INT7                  ; IRQ7 Handler
0x0012                 jmp     PCINT0                ; PCINT0 Handler
0x0014                 jmp     PCINT1                ; PCINT1 Handler
0x0016                 jmp     PCINT2                ; PCINT2 Handler
0X0018                 jmp     WDT                   ; Watchdog Timeout Handler
0x001A                 jmp     TIM2_COMPA            ; Timer2 CompareA Handler
0x001C                 jmp     TIM2_COMPB            ; Timer2 CompareB Handler
0x001E                 jmp     TIM2_OVF              ; Timer2 Overflow Handler
0x0020                 jmp     TIM1_CAPT             ; Timer1 Capture Handler
0x0022                 jmp     TIM1_COMPA            ; Timer1 CompareA Handler
0x0024                 jmp     TIM1_COMPB            ; Timer1 CompareB Handler
0x0026                 jmp     TIM1_COMPC            ; Timer1 CompareC Handler
```

```
0x0028          jmp     TIM1_OVF        ; Timer1 Overflow Handler
0x002A          jmp     TIM0_COMPA      ; Timer0 CompareA Handler
0x002C          jmp     TIM0_COMPB      ; Timer0 CompareB Handler
0x002E          jmp     TIM0_OVF        ; Timer0 Overflow Handler
0x0030          jmp     SPI_STC         ; SPI Transfer Complete Handler
0x0032          jmp     USART0_RXC      ; USART0 RX Complete Handler
0x0034          jmp     USART0_UDRE     ; USART0,UDR Empty Handler
0x0036          jmp     USART0_TXC      ; USART0 TX Complete Handler
0x0038          jmp     ANA_COMP        ; Analog Comparator Handler
0x003A          jmp     ADC             ; ADC Conversion Complete
                                          Handler
0x003C          jmp     EE_RDY          ; EEPROM Ready Handler
0x003E          jmp     TIM3_CAPT       ; Timer3 Capture Handler
0x0040          jmp     TIM3_COMPA      ; Timer3 CompareA Handler
0x0042          jmp     TIM3_COMPB      ; Timer3 CompareB Handler
0x0044          jmp     TIM3_COMPC      ; Timer3 CompareC Handler
0x0046          jmp     TIM3_OVF        ; Timer3 Overflow Handler
0x0048          jmp     USART1_RXC      ; USART1 RX Complete Handler
0x004A          jmp     USART1_UDRE     ; USART1,UDR Empty Handler
0x004C          jmp     USART1_TXC      ; USART1 TX Complete Handler
0x004E          jmp     TWI             ; 2-wire Serial Handler
0x0050          jmp     SPM_RDY         ; SPM Ready Handler
0x0052          jmp     TIM4_CAPT       ; Timer4 Capture Handler
0x0054          jmp     TIM4_COMPA      ; Timer4 CompareA Handler
0x0056          jmp     TIM4_COMPB      ; Timer4 CompareB Handler
0x0058          jmp     TIM4_COMPC      ; Timer4 CompareC Handler
0x005A          jmp     TIM4_OVF        ; Timer4 Overflow Handler
0x005C          jmp     TIM5_CAPT       ; Timer5 Capture Handler
0x005E          jmp     TIM5_COMPA      ; Timer5 CompareA Handler
0x0060          jmp     TIM5_COMPB      ; Timer5 CompareB Handler
```

```
0x006              jmp     TIM5_COMPC          ; Timer5 CompareC Handler
  2
0x006              jmp     TIM5_OVF            ; Timer5 Overflow Handler
  4
0x006              jmp     USART2_RXC          ; USART2 RX Complete Handler
  6
0x006              jmp     USART2_UDRE         ; USART2,UDR Empty Handler
  8
0x006              jmp     USART2_TXC          ; USART2 TX Complete Handler
  A
0x006              jmp     USART3_RXC          ; USART3 RX Complete Handler
  C
0x006              jmp     USART3_UDRE         ; USART3,UDR Empty Handler
  E
0x007              jmp     USART3_TXC          ; USART3 TX Complete Handler
  0
;
0x007    RESET     ldi     r16,                ; Main program start
  2        :                 high(RAMEND)
0x007              out     SPH,r16             ; Set Stack Pointer to top of
  3                                              RAM
0x007              ldi     r16,
  4                          low(RAMEND)
0x007              out     SPL,r16
  5
0x007              sei                         ; Enable interrupts
  6
0x007              <ins    xxx
  7                  tr
                     >
  ...      ...       ..       ...
                     .
```

When the BOOTRST Fuse is unprogrammed, the Boot section size set to 8Kbytes and the IVSEL bit in the MCUCR Register is set before any interrupts are enabled, the most typical and general program setup for the Reset and Interrupt Vector Addresses is:

```
Address  Labels Code                    Comments
0x00000  RESET: ldi    r16,high(RAMEND); Main program start
0x00001         out    SPH,r16         ; Set Stack Pointer to top of RAM
0x00002         ldi    r16,low(RAMEND)
0x00003         out    SPL,r16
0x00004         sei                    ; Enable interrupts
0x00005         <instr>  xxx
;
.org 0x1F002
0x1F002         jmp    EXT_INT0        ; IRQ0 Handler
0x1F004         jmp    EXT_INT1        ; IRQ1 Handler
...             ...    ...             ;
0x1FO70         jmp    USART3_TXC      ; USART3 TX Complete Handler
```

When the BOOTRST Fuse is programmed and the Boot section size set to 8Kbytes, the most typical and general program setup for the Reset and Interrupt Vector Addresses is:

```
Address  Labels Code                    Comments
.org 0x0002
0x00002         jmp    EXT_INT0        ; IRQ0 Handler
0x00004         jmp    EXT_INT1        ; IRQ1 Handler
...             ...    ...             ;
0x00070         jmp    USART3_TXC      ; USART3 TX Complete Handler
;
.org 0x1F000
0x1F000 RESET:  ldi    r16,high(RAMEND); Main program start
0x1F001         out    SPH,r16         ; Set Stack Pointer to top of RAM
0x1F002         ldi    r16,low(RAMEND)
0x1F003         out    SPL,r16
0x1F004         sei                    ; Enable interrupts
0x1F005         <instr>  xxx
```

When the BOOTRST Fuse is programmed, the Boot section size set to 8Kbytes and the IVSEL bit in the MCUCR Register is set before any interrupts are enabled, the most typical and general program setup for the Reset and Interrupt Vector Addresses is:

```
Address   Labels  Code                    Comments
;
.org 0x1F000
0x1F000           jmp    RESET            ; Reset handler
0x1F002           jmp    EXT_INT0         ; IRQ0 Handler
0x1F004           jmp    EXT_INT1         ; IRQ1 Handler
...               ...    ...              ;
0x1F070           jmp    USART3_TXC       ; USART3 TX Complete Handler
;
0x1F072   RESET:  ldi    r16,high(RAMEND) ; Main program start
0x1F073           out    SPH,r16          ; Set Stack Pointer to top of RAM
0x1F074           ldi    r16,low(RAMEND)
0x1F075           out    SPL,r16
0x1F076           sei                     ; Enable interrupts
0x1FO77           <instr>  xxx
```

14.3 Moving Interrupts Between Application and Boot Section

The MCU Control Register controls the placement of the Interrupt Vector table, see Code Example below. For more details, see “Reset and Interrupt Handling” on page 17.

Assembly Code Example

```
Move_interrupts:
  ; Get MCUCR
  in   r16, MCUCR
  mov  r17, r16

  ; Enable change of Interrupt Vectors
  ori  r16, (1<<IVCE)
  out  MCUCR, r16
  ; Move interrupts to Boot Flash section
  ori  r16, (1<<IVSEL)
  out  MCUCR, r17
  ret
```

C Code Example

```
void Move_interrupts(void)
{
uchar temp;
  /* Get MCUCR*/
  temp = MCUCR;
  /* Enable change of Interrupt Vectors */
  MCUCR = temp|(1<<IVCE);
  /* Move interrupts to Boot Flash section */
  MCUCR = temp|(1<<IVSEL);
}
```

14.4 Register Description

14.4.1 MCUCR – MCU Control Register

Bit	7	6	5	4	3	2	1	0	
0x35 (0x55)	JTD	–	–	PUD	–	–	IVSEL	IVCE	MCUCR
Read/Write	R/W	R	R	R/W	R	R	R/W	R/W	
Initial Value	0	0	0	0	0	0	0	0	

- **Bit 1 – IVSEL: Interrupt Vector Select**

When the IVSEL bit is cleared (zero), the Interrupt Vectors are placed at the start of the Flash memory. When this bit is set (one), the Interrupt Vectors are moved to the beginning of the Boot Loader section of the Flash. The actual address of the start of the Boot Flash Section is determined by the BOOTSZ Fuses. Refer to the section "Memory Programming" on page 325 for details. To avoid unintentional changes of Interrupt Vector tables, a special write procedure must be followed to change the IVSEL bit (see "Moving Interrupts Between Application and Boot Section" on page 107):

1. Write the Interrupt Vector Change Enable (IVCE) bit to one.
2. Within four cycles, write the desired value to IVSEL while writing a zero to IVCE.

Interrupts will automatically be disabled while this sequence is executed. Interrupts are disabled in the cycle IVCE is set, and they remain disabled until after the instruction following the write to IVSEL. If IVSEL is not written, interrupts remain disabled for four cycles. The I-bit in the Status Register is unaffected by the automatic disabling.

Note: If Interrupt Vectors are placed in the Boot Loader section and Boot Lock bit BLB02 is programmed, interrupts are disabled while executing from the Application section. If Interrupt Vectors are placed in the Application section and Boot Lock bit BLB12 is programed, interrupts are disabled while executing from the Boot Loader section. Refer to the section "Memory Programming" on page 325 for details on Boot Lock bits.

- **Bit 0 – IVCE: Interrupt Vector Change Enable**

The IVCE bit must be written to logic one to enable change of the IVSEL bit. IVCE is cleared by hardware four cycles after it is written or when IVSEL is written. Setting the IVCE bit will disable interrupts, as explained in the IVSEL description.

15. External Interrupts

The External Interrupts are triggered by the INT7:0 pin or any of the PCINT23:0 pins. Observe that, if enabled, the interrupts will trigger even if the INT7:0 or PCINT23:0 pins are configured as outputs. This feature provides a way of generating a software interrupt.

The Pin change interrupt PCI2 will trigger if any enabled PCINT23:16 pin toggles, Pin change interrupt PCI1 if any enabled PCINT15:8 toggles and Pin change interrupts PCI0 will trigger if any enabled PCINT7:0 pin toggles. PCMSK2, PCMSK1 and PCMSK0 Registers control which pins contribute to the pin change interrupts. Pin change interrupts on PCINT23:0 are detected asynchronously. This implies that these interrupts can be used for waking the part also from sleep modes other than Idle mode.

The External Interrupts can be triggered by a falling or rising edge or a low level. This is set up as indicated in the specification for the External Interrupt Control Registers – EICRA (INT3:0) and EICRB (INT7:4). When the external interrupt is enabled and is configured as level triggered, the interrupt will trigger as long as the pin is held low.

Low level interrupts and the edge interrupt on INT3:0 are detected asynchronously. This implies that these interrupts can be used for waking the part also from sleep modes other than Idle mode. The I/O clock is halted in all sleep modes except Idle mode.

Note that if a level triggered interrupt is used for wake-up from Power-down, the required level must be held long enough for the MCU to complete the wake-up to trigger the level interrupt. If the level disappears before the end of the Start-up Time, the MCU will still wake up, but no interrupt will be generated. The start-up time is defined by the SUT and CKSEL Fuses as described in “System Clock and Clock Options” on page 39.

15.1 Pin Change Interrupt Timing

An example of timing of a pin change interrupt is shown in Figure 15-1.

Figure 15-1. Normal pin change interrupt.

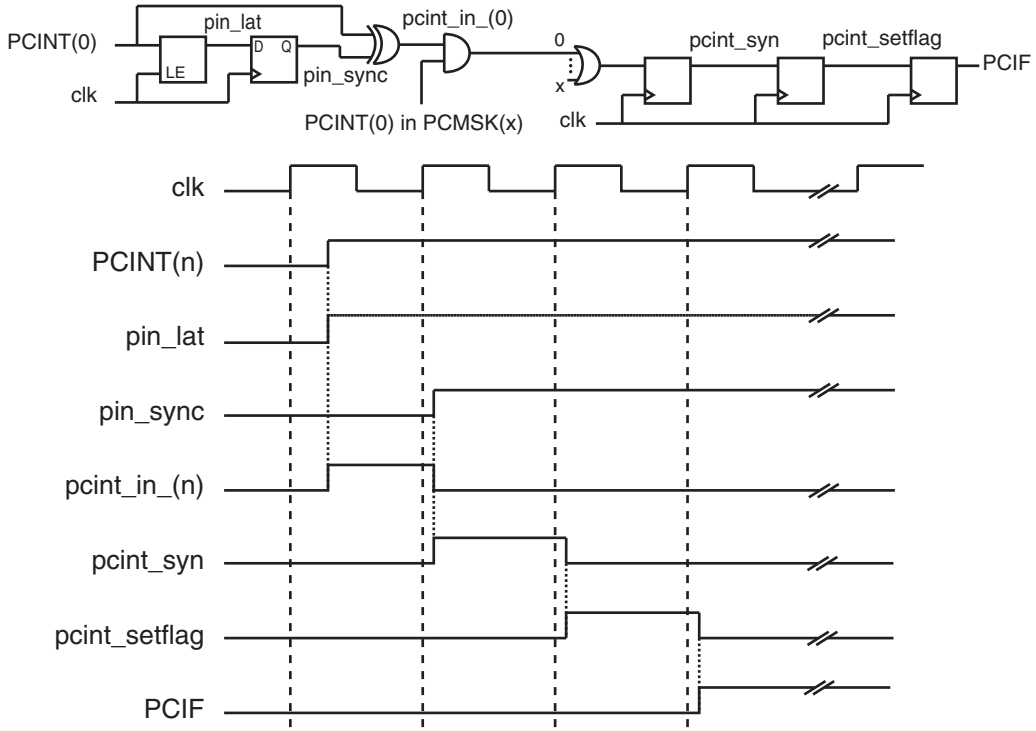

15.2 Register Description

15.2.1 EICRA – External Interrupt Control Register A

The External Interrupt Control Register A contains control bits for interrupt sense control.

Bit	7	6	5	4	3	2	1	0	
(0x69)	ISC31	ISC30	ISC21	ISC20	ISC11	ISC10	ISC01	ISC00	EICRA
Read/Write	R/W	R/W	R/W	R/W	R/W	R/W	R/W	R/W	
Initial Value	0	0	0	0	0	0	0	0	

- **Bits 7:0 – ISC31, ISC30 – ISC00, ISC00: External Interrupt 3 - 0 Sense Control Bits**

The External Interrupts 3 - 0 are activated by the external pins INT3:0 if the SREG I-flag and the corresponding interrupt mask in the EIMSK is set. The level and edges on the external pins that activate the interrupts are defined in Table 15-1. Edges on INT3:0 are registered asynchronously. Pulses on INT3:0 pins wider than the minimum pulse width given in Table 15-2 will generate an interrupt. Shorter pulses are not guaranteed to generate an interrupt. If low level interrupt is selected, the low level must be held until the completion of the currently executing instruction to generate an interrupt. If enabled, a level triggered interrupt will generate an interrupt request as long as the pin is held low. When changing the ISCn bit, an interrupt can occur. Therefore, it is recommended to first disable INTn by clearing its Interrupt Enable bit in the EIMSK Register. Then, the ISCn bit can be changed. Finally, the INTn interrupt flag should be cleared by writing a logical one to its Interrupt Flag bit (INTFn) in the EIFR Register before the interrupt is re-enabled.

Table 15-1. Interrupt Sense Control[(1)]

ISCn1	ISCn0	Description
0	0	The low level of INTn generates an interrupt request
0	1	Any edge of INTn generates asynchronously an interrupt request
1	0	The falling edge of INTn generates asynchronously an interrupt request
1	1	The rising edge of INTn generates asynchronously an interrupt request

Note: 1. n = 3, 2, 1or 0.
When changing the ISCn1/ISCn0 bits, the interrupt must be disabled by clearing its Interrupt Enable bit in the EIMSK Register. Otherwise an interrupt can occur when the bits are changed.

Table 15-2. Asynchronous External Interrupt Characteristics

Symbol	Parameter	Condition	Min.	Typ.	Max.	Units
t_{INT}	Minimum pulse width for asynchronous external interrupt			50		ns

15.2.2 EICRB – External Interrupt Control Register B

Bit	7	6	5	4	3	2	1	0	
(0x6A)	ISC71	ISC70	ISC61	ISC60	ISC51	ISC50	ISC41	ISC40	EICRB
Read/Write	R/W	R/W	R/W	R/W	R/W	R/W	R/W	R/W	
Initial Value	0	0	0	0	0	0	0	0	

- **Bits 7:0 – ISC71, ISC70 - ISC41, ISC40: External Interrupt 7 - 4 Sense Control Bits**

The External Interrupts 7 - 4 are activated by the external pins INT7:4 if the SREG I-flag and the corresponding interrupt mask in the EIMSK is set. The level and edges on the external pins that activate the interrupts are defined in Table 15-3. The value on the INT7:4 pins are sampled before detecting edges. If edge or toggle interrupt is selected, pulses that last longer than one clock period will generate an interrupt. Shorter pulses are not guaranteed to generate an interrupt. Observe that CPU clock frequency can be lower than the XTAL frequency if the XTAL divider is enabled. If low level interrupt is selected, the low level must be held until the completion of the currently executing instruction to generate an interrupt. If enabled, a level triggered interrupt will generate an interrupt request as long as the pin is held low.

Table 15-3. Interrupt Sense Control[1]

ISCn1	ISCn0	Description
0	0	The low level of INTn generates an interrupt request
0	1	Any logical change on INTn generates an interrupt request
1	0	The falling edge between two samples of INTn generates an interrupt request
1	1	The rising edge between two samples of INTn generates an interrupt request

Note: 1. n = 7, 6, 5 or 4.
When changing the ISCn1/ISCn0 bits, the interrupt must be disabled by clearing its Interrupt Enable bit in the EIMSK Register. Otherwise an interrupt can occur when the bits are changed.

15.2.3 EIMSK – External Interrupt Mask Register

Bit	7	6	5	4	3	2	1	0	
0x1D (0x3D)	INT7	INT6	INT5	INT4	INT3	INT2	INT1	INT0	EIMSK
Read/Write	R/W	R/W	R/W	R/W	R/W	R/W	R/W	R/W	
Initial Value	0	0	0	0	0	0	0	0	

- **Bits 7:0 – INT7:0: External Interrupt Request 7 - 0 Enable**

When an INT7:0 bit is written to one and the I-bit in the Status Register (SREG) is set (one), the corresponding external pin interrupt is enabled. The Interrupt Sense Control bits in the External Interrupt Control Registers – EICRA and EICRB – defines whether the external interrupt is activated on rising or falling edge or level sensed. Activity on any of these pins will trigger an interrupt request even if the pin is enabled as an output. This provides a way of generating a software interrupt.

15.2.4 EIFR – External Interrupt Flag Register

Bit	7	6	5	4	3	2	1	0	
0x1C (0x3C)	**INTF7**	**INTF6**	**INTF5**	**INTF4**	**INTF3**	**INTF2**	**INTF1**	**IINTF0**	**EIFR**
Read/Write	R/W	R/W	R/W	R/W	R/W	R/W	R/W	R/W	
Initial Value	0	0	0	0	0	0	0	0	

- **Bits 7:0 – INTF7:0: External Interrupt Flags 7 - 0**

When an edge or logic change on the INT7:0 pin triggers an interrupt request, INTF7:0 becomes set (one). If the I-bit in SREG and the corresponding interrupt enable bit, INT7:0 in EIMSK, are set (one), the MCU will jump to the interrupt vector. The flag is cleared when the interrupt routine is executed. Alternatively, the flag can be cleared by writing a logical one to it. These flags are always cleared when INT7:0 are configured as level interrupt. Note that when entering sleep mode with the INT3:0 interrupts disabled, the input buffers on these pins will be disabled. This may cause a logic change in internal signals which will set the INTF3:0 flags. See “Digital Input Enable and Sleep Modes” on page 71 for more information.

15.2.5 PCICR – Pin Change Interrupt Control Register

Bit	7	6	5	4	3	2	1	0	
(0x68)	–	–	–	–	–	**PCIE2**	**PCIE1**	**PCIE0**	**PCICR**
Read/Write	R	R	R	R	R	R/W	R/W	R/W	
Initial Value	0	0	0	0	0	0	0	0	

- **Bit 2 – PCIE2: Pin Change Interrupt Enable 1**

When the PCIE2 bit is set (one) and the I-bit in the Status Register (SREG) is set (one), pin change interrupt 2 is enabled. Any change on any enabled PCINT23:16 pin will cause an interrupt. The corresponding interrupt of Pin Change Interrupt Request is executed from the PCI2 Interrupt Vector. PCINT23:16 pins are enabled individually by the PCMSK2 Register.

- **Bit 1 – PCIE1: Pin Change Interrupt Enable 1**

When the PCIE1 bit is set (one) and the I-bit in the Status Register (SREG) is set (one), pin change interrupt 1 is enabled. Any change on any enabled PCINT15:8 pin will cause an interrupt. The corresponding interrupt of Pin Change Interrupt Request is executed from the PCI1 Interrupt Vector. PCINT15:8 pins are enabled individually by the PCMSK1 Register.

- **Bit 0 – PCIE0: Pin Change Interrupt Enable 0**

When the PCIE0 bit is set (one) and the I-bit in the Status Register (SREG) is set (one), pin change interrupt 0 is enabled. Any change on any enabled PCINT7:0 pin will cause an interrupt. The corresponding interrupt of Pin Change Interrupt Request is executed from the PCI0 Interrupt Vector. PCINT7:0 pins are enabled individually by the PCMSK0 Register.

15.2.6 PCIFR – Pin Change Interrupt Flag Register

Bit	7	6	5	4	3	2	1	0	
0x1B (0x3B)	–	–	–	–	–	PCIF2	PCIF1	PCIF0	PCIFR
Read/Write	R	R	R	R	R	R/W	R/W	R/W	
Initial Value	0	0	0	0	0	0	0	0	

- **Bit 2 – PCIF2: Pin Change Interrupt Flag 1**

When a logic change on any PCINT23:16 pin triggers an interrupt request, PCIF2 becomes set (one). If the I-bit in SREG and the PCIE2 bit in PCICR are set (one), the MCU will jump to the corresponding Interrupt Vector. The flag is cleared when the interrupt routine is executed. Alternatively, the flag can be cleared by writing a logical one to it.

- **Bit 1 – PCIF1: Pin Change Interrupt Flag 1**

When a logic change on any PCINT15:8 pin triggers an interrupt request, PCIF1 becomes set (one). If the I-bit in SREG and the PCIE1 bit in PCICR are set (one), the MCU will jump to the corresponding Interrupt Vector. The flag is cleared when the interrupt routine is executed. Alternatively, the flag can be cleared by writing a logical one to it.

- **Bit 0 – PCIF0: Pin Change Interrupt Flag 0**

When a logic change on any PCINT7:0 pin triggers an interrupt request, PCIF0 becomes set (one). If the I-bit in SREG and the PCIE0 bit in PCICR are set (one), the MCU will jump to the corresponding Interrupt Vector. The flag is cleared when the interrupt routine is executed. Alternatively, the flag can be cleared by writing a logical one to it.

15.2.7 PCMSK2 – Pin Change Mask Register 2

Bit	7	6	5	4	3	2	1	0	
(0x6D)	PCINT23	PCINT22	PCINT21	PCINT20	PCINT19	PCINT18	PCINT17	PCINT16	PCMSK2
Read/Write	R/W	R/W	R/W	R/W	R/W	R/W	R/W	R/W	
Initial Value	0	0	0	0	0	0	0	0	

- **Bit 7:0 – PCINT23:16: Pin Change Enable Mask 23:16**

Each PCINT23:16-bit selects whether pin change interrupt is enabled on the corresponding I/O pin. If PCINT23:16 is set and the PCIE2 bit in PCICR is set, pin change interrupt is enabled on the corresponding I/O pin. If PCINT23:16 is cleared, pin change interrupt on the corresponding I/O pin is disabled.

15.2.8 PCMSK1 – Pin Change Mask Register 1

Bit	7	6	5	4	3	2	1	0	
(0x6C)	PCINT15	PCINT14	PCINT13	PCINT12	PCINT11	PCINT10	PCINT9	PCINT8	PCMSK1
Read/Write	R/W	R/W	R/W	R/W	R/W	R/W	R/W	R/W	
Initial Value	0	0	0	0	0	0	0	0	

- **Bit 7:0 – PCINT15:8: Pin Change Enable Mask 15:8**

Each PCINT15:8-bit selects whether pin change interrupt is enabled on the corresponding I/O pin. If PCINT15:8 is set and the PCIE1 bit in PCICR is set, pin change interrupt is enabled on the corresponding I/O pin. If PCINT15:8 is cleared, pin change interrupt on the corresponding I/O pin is disabled.

15.2.9 PCMSK0 – Pin Change Mask Register 0

Bit	7	6	5	4	3	2	1	0	
(0x6B)	**PCINT7**	**PCINT6**	**PCINT5**	**PCINT4**	**PCINT3**	**PCINT2**	**PCINT1**	**PCINT0**	**PCMSK0**
Read/Write	R/W	R/W	R/W	R/W	R/W	R/W	R/W	R/W	
Initial Value	0	0	0	0	0	0	0	0	

- **Bit 7:0 – PCINT7:0: Pin Change Enable Mask 7:0**

Each PCINT7:0 bit selects whether pin change interrupt is enabled on the corresponding I/O pin. If PCINT7:0 is set and the PCIE0 bit in PCICR is set, pin change interrupt is enabled on the corresponding I/O pin. If PCINT7:0 is cleared, pin change interrupt on the corresponding I/O pin is disabled.

16. 8-bit Timer/Counter0 with PWM

16.1 Features

- **Two Independent Output Compare Units**
- **Double Buffered Output Compare Registers**
- **Clear Timer on Compare Match (Auto Reload)**
- **Glitch Free, Phase Correct Pulse Width Modulator (PWM)**
- **Variable PWM Period**
- **Frequency Generator**
- **Three Independent Interrupt Sources (TOV0, OCF0A, and OCF0B)**

16.2 Overview

Timer/Counter0 is a general purpose 8-bit Timer/Counter module, with two independent Output Compare Units, and with PWM support. It allows accurate program execution timing (event management) and wave generation.

A simplified block diagram of the 8-bit Timer/Counter is shown in Figure 16-1. For the actual placement of I/O pins, refer to "TQFP-pinout ATmega640/1280/2560" on page 2. CPU accessible I/O Registers, including I/O bits and I/O pins, are shown in bold. The device-specific I/O Register and bit locations are listed in the "Register Description" on page 126.

Figure 16-1. 8-bit Timer/Counter Block Diagram

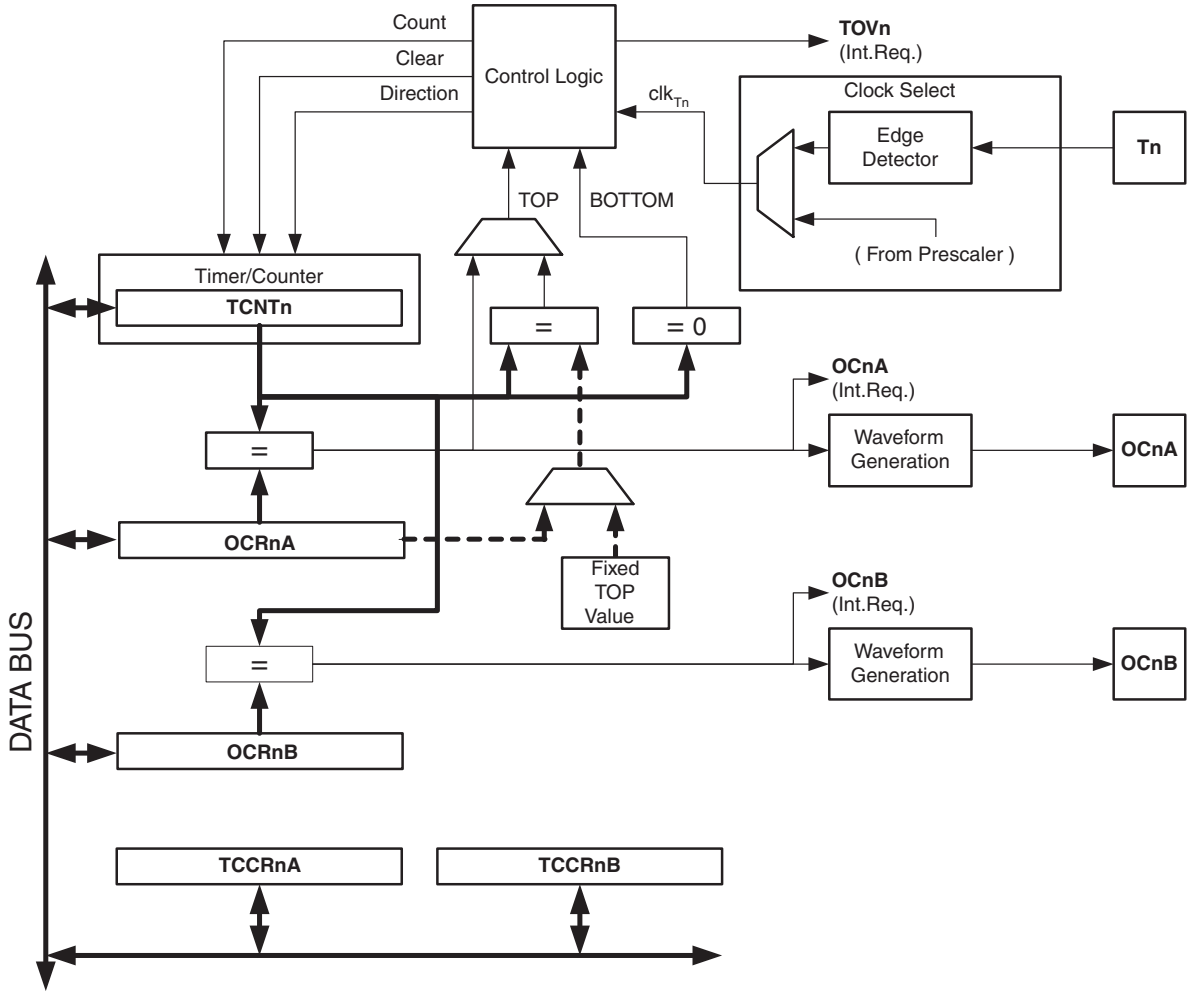

16.2.1 Registers

The Timer/Counter (TCNT0) and Output Compare Registers (OCR0A and OCR0B) are 8-bit registers. Interrupt request (abbreviated to Int.Req. in the figure) signals are all visible in the Timer Interrupt Flag Register (TIFR0). All interrupts are individually masked with the Timer Interrupt Mask Register (TIMSK0). TIFR0 and TIMSK0 are not shown in the figure.

The Timer/Counter can be clocked internally, via the prescaler, or by an external clock source on the T0 pin. The Clock Select logic block controls which clock source and edge the Timer/Counter uses to increment (or decrement) its value. The Timer/Counter is inactive when no clock source is selected. The output from the Clock Select logic is referred to as the timer clock (clk_{T0}).

The double buffered Output Compare Registers (OCR0A and OCR0B) are compared with the Timer/Counter value at all times. The result of the compare can be used by the Waveform Generator to generate a PWM or variable frequency output on the Output Compare pins (OC0A and OC0B). See “Output Compare Unit” on page 117. for details. The Compare Match event will also set the Compare Flag (OCF0A or OCF0B) which can be used to generate an Output Compare interrupt request.

16.2.2 Definitions

Many register and bit references in this section are written in general form. A lower case “n” replaces the Timer/Counter number, in this case 0. A lower case “x” replaces the Output Compare Unit, in this case Compare Unit A or Compare Unit B. However, when using the register or bit defines in a program, the precise form must be used, that is, TCNT0 for accessing Timer/Counter0 counter value and so on.

The definitions in Table 16-1 are also used extensively throughout the document.

Table 16-1. Definitions

BOTTOM	The counter reaches the BOTTOM when it becomes 0x00.
MAX	The counter reaches its MAXimum when it becomes 0xFF (decimal 255).
TOP	The counter reaches the TOP when it becomes equal to the highest value in the count sequence. The TOP value can be assigned to be the fixed value 0xFF (MAX) or the value stored in the OCR0A Register. The assignment is dependent on the mode of operation.

16.3 Timer/Counter Clock Sources

The Timer/Counter can be clocked by an internal or an external clock source. The clock source is selected by the Clock Select logic which is controlled by the Clock Select (CS02:0) bits located in the Timer/Counter Control Register (TCCR0B). For details on clock sources and prescaler, see “Timer/Counter 0, 1, 3, 4, and 5 Prescaler” on page 164.

16.4 Counter Unit

The main part of the 8-bit Timer/Counter is the programmable bi-directional counter unit. Figure 16-2 on page 117 shows a block diagram of the counter and its surroundings.

Figure 16-2. Counter Unit Block Diagram

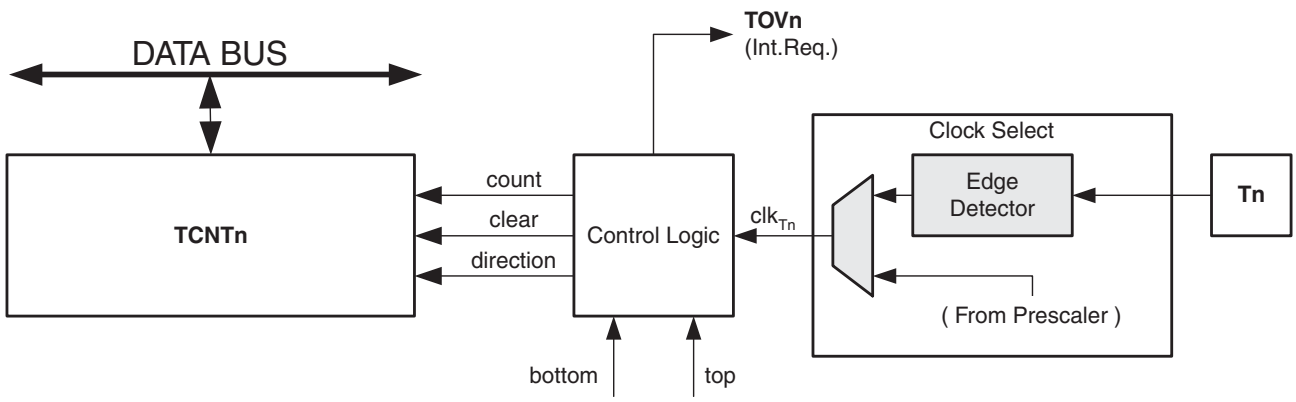

Signal description (internal signals):

count	Increment or decrement TCNT0 by 1.
direction	Select between increment and decrement.
clear	Clear TCNT0 (set all bits to zero).
clk_{Tn}	Timer/Counter clock, referred to as clk_{T0} in the following.
top	Signalize that TCNT0 has reached maximum value.
bottom	Signalize that TCNT0 has reached minimum value (zero).

Depending of the mode of operation used, the counter is cleared, incremented, or decremented at each timer clock (clk_{T0}). clk_{T0} can be generated from an external or internal clock source, selected by the Clock Select bits (CS02:0). When no clock source is selected (CS02:0 = 0) the timer is stopped. However, the TCNT0 value can be accessed by the CPU, regardless of whether clk_{T0} is present or not. A CPU write overrides (has priority over) all counter clear or count operations.

The counting sequence is determined by the setting of the WGM01 and WGM00 bits located in the Timer/Counter Control Register (TCCR0A) and the WGM02 bit located in the Timer/Counter Control Register B (TCCR0B). There are close connections between how the counter behaves (counts) and how waveforms are generated on the Output Compare outputs OC0A and OC0B. For more details about advanced counting sequences and waveform generation, see "Modes of Operation" on page 120.

The Timer/Counter Overflow Flag (TOV0) is set according to the mode of operation selected by the WGM02:0 bits. TOV0 can be used for generating a CPU interrupt.

16.5 Output Compare Unit

The 8-bit comparator continuously compares TCNT0 with the Output Compare Registers (OCR0A and OCR0B). Whenever TCNT0 equals OCR0A or OCR0B, the comparator signals a match. A match will set the Output Compare Flag (OCF0A or OCF0B) at the next timer clock cycle. If the corresponding interrupt is enabled, the Output Compare Flag generates an Output Compare interrupt. The Output Compare Flag is automatically cleared when the interrupt is executed. Alternatively, the flag can be cleared by software by writing a logical one to its I/O bit location. The Waveform Generator uses the match signal to generate an output according to operating mode set by the WGM02:0 bits and Compare Output mode (COM0x1:0) bits. The maximum and bottom signals are used by the Waveform Generator for handling the special cases of the extreme values in some modes of operation ("Modes of Operation" on page 120).

Figure 16-3 on page 118 shows a block diagram of the Output Compare unit.

Figure 16-3. Output Compare Unit, Block Diagram

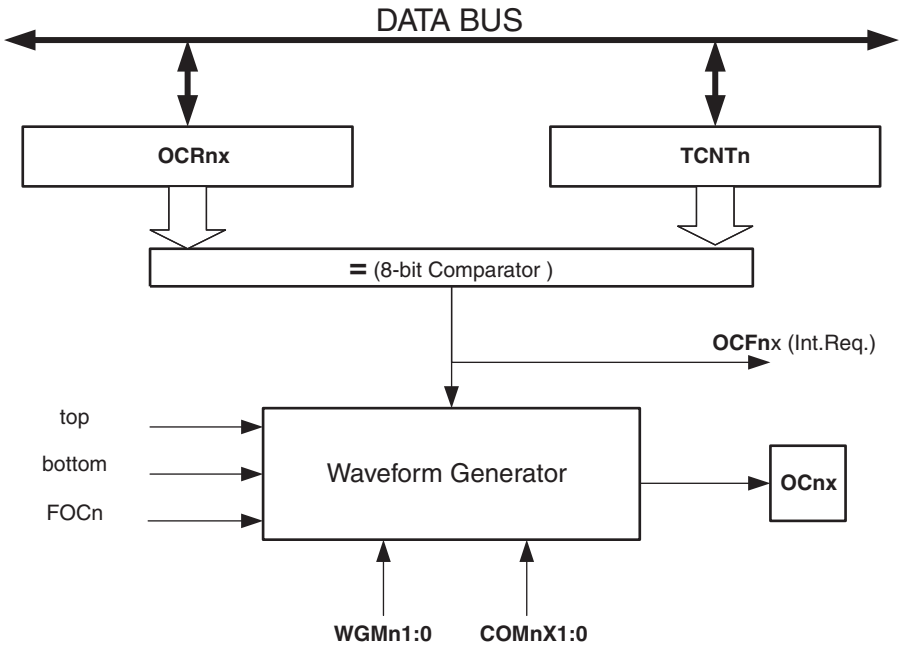

The OCR0x Registers are double buffered when using any of the Pulse Width Modulation (PWM) modes. For the normal and Clear Timer on Compare (CTC) modes of operation, the double buffering is disabled. The double buffering synchronizes the update of the OCR0x Compare Registers to either top or bottom of the counting sequence. The synchronization prevents the occurrence of odd-length, non-symmetrical PWM pulses, thereby making the output glitch-free.

The OCR0x Register access may seem complex, but this is not case. When the double buffering is enabled, the CPU has access to the OCR0x Buffer Register, and if double buffering is disabled the CPU will access the OCR0x directly.

16.5.1 Force Output Compare

In non-PWM waveform generation modes, the match output of the comparator can be forced by writing a one to the Force Output Compare (FOC0x) bit. Forcing Compare Match will not set the OCF0x Flag or reload/clear the timer, but the OC0x pin will be updated as if a real Compare Match had occurred (the COM0x1:0 bits settings define whether the OC0x pin is set, cleared or toggled).

16.5.2 Compare Match Blocking by TCNT0 Write

All CPU write operations to the TCNT0 Register will block any Compare Match that occur in the next timer clock cycle, even when the timer is stopped. This feature allows OCR0x to be initialized to the same value as TCNT0 without triggering an interrupt when the Timer/Counter clock is enabled.

16.5.3 Using the Output Compare Unit

Since writing TCNT0 in any mode of operation will block all Compare Matches for one timer clock cycle, there are risks involved when changing TCNT0 when using the Output Compare Unit, independently of whether the Timer/Counter is running or not. If the value written to TCNT0 equals the OCR0x value, the Compare Match will be missed, resulting in incorrect waveform generation. Similarly, do not write the TCNT0 value equal to BOTTOM when the counter is down-counting.

The setup of the OC0x should be performed before setting the Data Direction Register for the port pin to output. The easiest way of setting the OC0x value is to use the Force Output Compare (FOC0x) strobe bits in Normal mode. The OC0x Registers keep their values even when changing between Waveform Generation modes.

Be aware that the COM0x1:0 bits are not double buffered together with the compare value. Changing the COM0x1:0 bits will take effect immediately.

16.6 Compare Match Output Unit

The Compare Output mode (COM0x1:0) bits have two functions. The Waveform Generator uses the COM0x1:0 bits for defining the Output Compare (OC0x) state at the next Compare Match. Also, the COM0x1:0 bits control the OC0x pin output source. Figure 16-4 shows a simplified schematic of the logic affected by the COM0x1:0 bit setting. The I/O Registers, I/O bits, and I/O pins in the figure are shown in bold. Only the parts of the general I/O Port Control Registers (DDR and PORT) that are affected by the COM0x1:0 bits are shown. When referring to the OC0x state, the reference is for the internal OC0x Register, not the OC0x pin. If a system reset occur, the OC0x Register is reset to “0”.

Figure 16-4. Compare Match Output Unit, Schematic

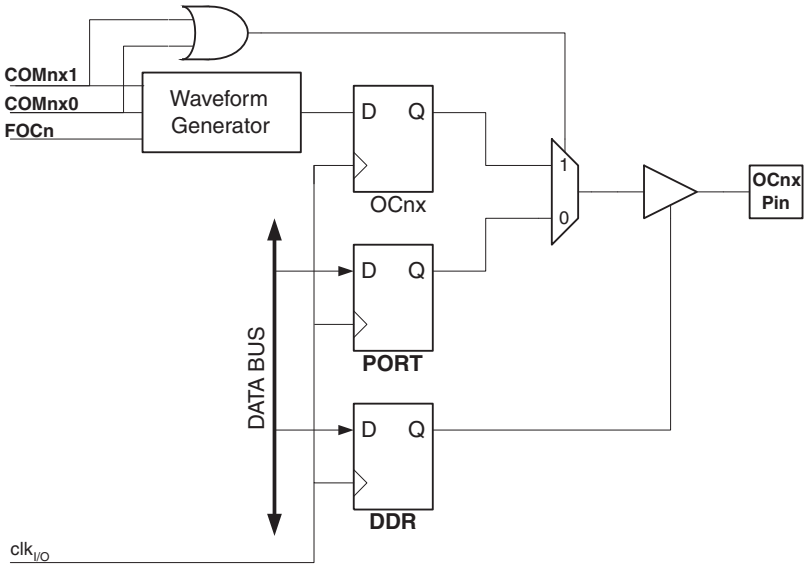

The general I/O port function is overridden by the Output Compare (OC0x) from the Waveform Generator if either of the COM0x1:0 bits are set. However, the OC0x pin direction (input or output) is still controlled by the Data Direction Register (DDR) for the port pin. The Data Direction Register bit for the OC0x pin (DDR_OC0x) must be set as output before the OC0x value is visible on the pin. The port override function is independent of the Waveform Generation mode.

The design of the Output Compare pin logic allows initialization of the OC0x state before the output is enabled. Note that some COM0x1:0 bit settings are reserved for certain modes of operation. See “Register Description” on page 126.

16.6.1 Compare Output Mode and Waveform Generation

The Waveform Generator uses the COM0x1:0 bits differently in Normal, CTC, and PWM modes. For all modes, setting the COM0x1:0 = 0 tells the Waveform Generator that no action on the OC0x Register is to be performed on the next Compare Match. For compare output actions in the non-PWM modes refer to Table 16-2 on page 126. For fast PWM mode, refer to Table 16-3 on page 126, and for phase correct PWM refer to Table 16-4 on page 127.

A change of the COM0x1:0 bits state will have effect at the first Compare Match after the bits are written. For non-PWM modes, the action can be forced to have immediate effect by using the FOC0x strobe bits.

16.7 Modes of Operation

The mode of operation, that is, the behavior of the Timer/Counter and the Output Compare pins, is defined by the combination of the Waveform Generation mode (WGM02:0) and Compare Output mode (COM0x1:0) bits. The Compare Output mode bits do not affect the counting sequence, while the Waveform Generation mode bits do. The COM0x1:0 bits control whether the PWM output generated should be inverted or not (inverted or non-inverted PWM). For non-PWM modes the COM0x1:0 bits control whether the output should be set, cleared, or toggled at a Compare Match. See “Compare Match Output Unit” on page 143.

For detailed timing information see “Timer/Counter Timing Diagrams” on page 124.

16.7.1 Normal Mode

The simplest mode of operation is the Normal mode (WGM02:0 = 0). In this mode the counting direction is always up (incrementing), and no counter clear is performed. The counter simply overruns when it passes its maximum 8-bit value (TOP = 0xFF) and then restarts from the bottom (0x00). In normal operation the Timer/Counter Overflow Flag (TOV0) will be set in the same timer clock cycle as the TCNT0 becomes zero. The TOV0 Flag in this case behaves like a ninth bit, except that it is only set, not cleared. However, combined with the timer overflow interrupt that automatically clears the TOV0 Flag, the timer resolution can be increased by software. There are no special cases to consider in the Normal mode, a new counter value can be written anytime.

The Output Compare Unit can be used to generate interrupts at some given time. Using the Output Compare to generate waveforms in Normal mode is not recommended, since this will occupy too much of the CPU time.

16.7.2 Clear Timer on Compare Match (CTC) Mode

In Clear Timer on Compare or CTC mode (WGM02:0 = 2), the OCR0A Register is used to manipulate the counter resolution. In CTC mode the counter is cleared to zero when the counter value (TCNT0) matches the OCR0A. The OCR0A defines the top value for the counter, hence also its resolution. This mode allows greater control of the Compare Match output frequency. It also simplifies the operation of counting external events.

The timing diagram for the CTC mode is shown in Figure 16-5. The counter value (TCNT0) increases until a Compare Match occurs between TCNT0 and OCR0A, and then counter (TCNT0) is cleared.

Figure 16-5. CTC Mode, Timing Diagram

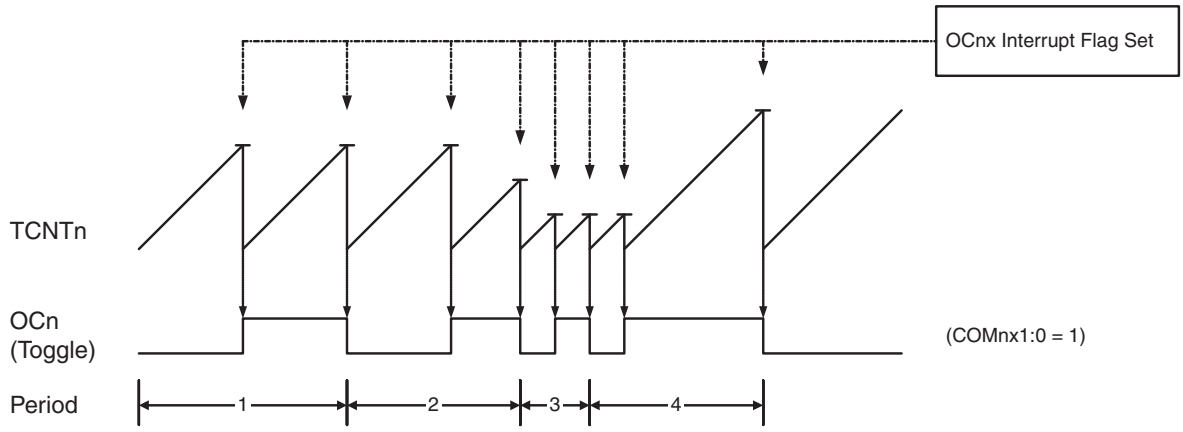

An interrupt can be generated each time the counter value reaches the TOP value by using the OCF0A Flag. If the interrupt is enabled, the interrupt handler routine can be used for updating the TOP value. However, changing TOP to a value close to BOTTOM when the counter is running with none or a low prescaler value must be done with care since the CTC mode does not have the double buffering feature. If the new value written to OCR0A is lower than the current value of TCNT0, the counter will miss the Compare Match. The counter will then have to count to its maximum value (0xFF) and wrap around starting at 0x00 before the Compare Match can occur.

For generating a waveform output in CTC mode, the OC0A output can be set to toggle its logical level on each Compare Match by setting the Compare Output mode bits to toggle mode (COM0A1:0 = 1). The OC0A value will not be visible on the port pin unless the data direction for the pin is set to output. The waveform generated will have a maximum frequency of $f_{OC0} = f_{clk_I/O}/2$ when OCR0A is set to zero (0x00). The waveform frequency is defined by the following equation:

$$f_{OCnx} = \frac{f_{clk_I/O}}{2 \cdot N \cdot (1 + OCRnx)}$$

The *N* variable represents the prescale factor (1, 8, 64, 256, or 1024).

As for the Normal mode of operation, the TOV0 Flag is set in the same timer clock cycle that the counter counts from MAX to 0x00.

16.7.3 Fast PWM Mode

The fast Pulse Width Modulation or fast PWM mode (WGM02:0 = 3 or 7) provides a high frequency PWM waveform generation option. The fast PWM differs from the other PWM option by its single-slope operation. The counter counts from BOTTOM to TOP then restarts from BOTTOM. TOP is defined as 0xFF when WGM2:0 = 3, and OCR0A when WGM2:0 = 7. In non-inverting Compare Output mode, the Output Compare (OC0x) is cleared on the Compare Match between TCNT0 and OCR0x, and set at BOTTOM. In inverting Compare Output mode, the output is set on Compare Match and cleared at BOTTOM. Due to the single-slope operation, the operating frequency of the fast PWM mode can be twice as high as the phase correct PWM mode that use dual-slope operation. This high frequency makes the fast PWM mode well suited for power regulation, rectification, and DAC applications. High frequency allows physically small sized external components (coils, capacitors), and therefore reduces total system cost.

In fast PWM mode, the counter is incremented until the counter value matches the TOP value. The counter is then cleared at the following timer clock cycle. The timing diagram for the fast PWM mode is shown in Figure 16-6. The TCNT0 value is in the timing diagram shown as a histogram for illustrating the single-slope operation. The diagram includes non-inverted and inverted PWM outputs. The small horizontal line marks on the TCNT0 slopes represent Compare Matches between OCR0x and TCNT0.

Figure 16-6. Fast PWM Mode, Timing Diagram

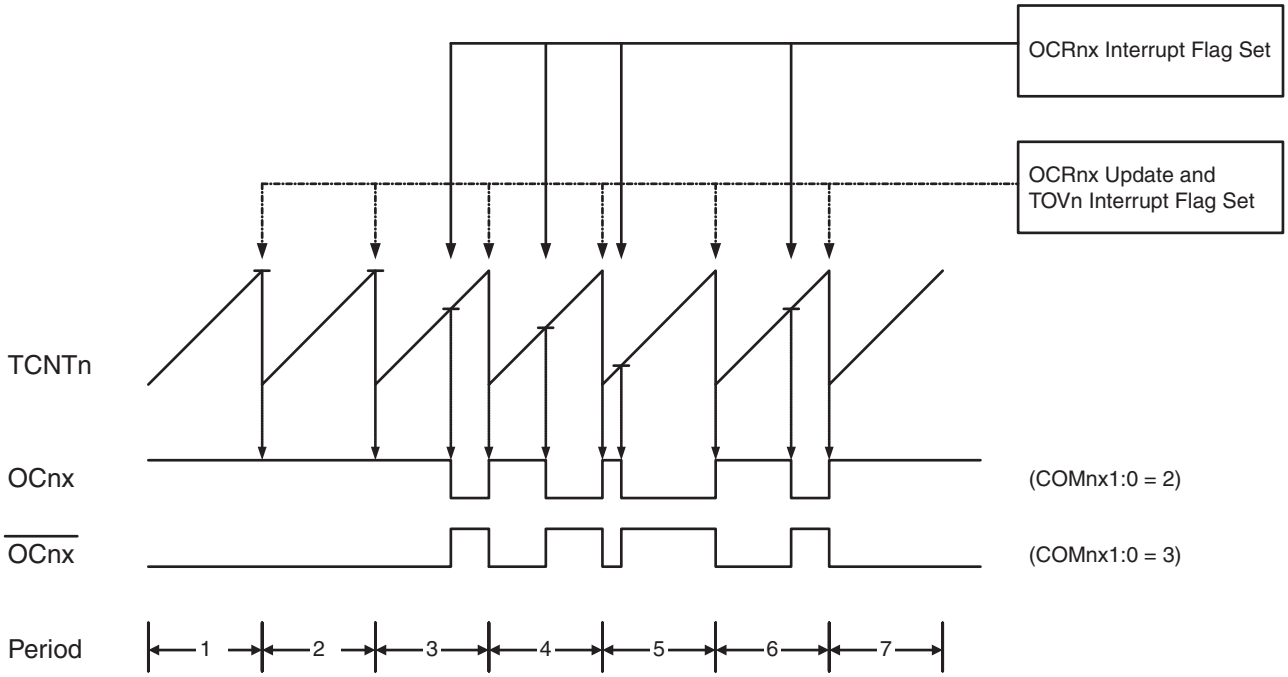

The Timer/Counter Overflow Flag (TOV0) is set each time the counter reaches TOP. If the interrupt is enabled, the interrupt handler routine can be used for updating the compare value.

In fast PWM mode, the compare unit allows generation of PWM waveforms on the OC0x pins. Setting the COM0x1:0 bits to two will produce a non-inverted PWM and an inverted PWM output can be generated by setting the COM0x1:0 to three: Setting the COM0A1:0 bits to one allows the OC0A pin to toggle on Compare Matches if the WGM02 bit is set. This option is not available for the OC0B pin (see Table 16-3 on page 126). The actual OC0x value will only be visible on the port pin if the data direction for the port pin is set as output. The PWM waveform is generated by setting (or clearing) the OC0x Register at the Compare Match between OCR0x and TCNT0, and clearing (or setting) the OC0x Register at the timer clock cycle the counter is cleared (changes from TOP to BOTTOM).

The PWM frequency for the output can be calculated by the following equation:

$$f_{OCnxPWM} = \frac{f_{\text{clk_I/O}}}{N \cdot 256}$$

The *N* variable represents the prescale factor (1, 8, 64, 256, or 1024).

The extreme values for the OCR0A Register represents special cases when generating a PWM waveform output in the fast PWM mode. If the OCR0A is set equal to BOTTOM, the output will be a narrow spike for each MAX+1 timer clock cycle. Setting the OCR0A equal to MAX will result in a constantly high or low output (depending on the polarity of the output set by the COM0A1:0 bits).

A frequency (with 50% duty cycle) waveform output in fast PWM mode can be achieved by setting OC0x to toggle its logical level on each Compare Match (COM0x1:0 = 1). The waveform generated will have a maximum frequency of $f_{OC0} = f_{clk_I/O}/2$ when OCR0A is set to zero. This feature is similar to the OC0A toggle in CTC mode, except the double buffer feature of the Output Compare unit is enabled in the fast PWM mode.

16.7.4 Phase Correct PWM Mode

The phase correct PWM mode (WGM02:0 = 1 or 5) provides a high resolution phase correct PWM waveform generation option. The phase correct PWM mode is based on a dual-slope operation. The counter counts repeatedly from BOTTOM to TOP and then from TOP to BOTTOM. TOP is defined as 0xFF when WGM2:0 = 1, and OCR0A when WGM2:0 = 5. In non-inverting Compare Output mode, the Output Compare (OC0x) is cleared on the Compare Match between TCNT0 and OCR0x while upcounting, and set on the Compare Match while down-counting. In inverting Output Compare mode, the operation is inverted. The dual-slope operation has lower maximum operation frequency than single slope operation. However, due to the symmetric feature of the dual-slope PWM modes, these modes are preferred for motor control applications.

In phase correct PWM mode the counter is incremented until the counter value matches TOP. When the counter reaches TOP, it changes the count direction. The TCNT0 value will be equal to TOP for one timer clock cycle. The timing diagram for the phase correct PWM mode is shown on Figure 16-7 on page 123. The TCNT0 value is in the timing diagram shown as a histogram for illustrating the dual-slope operation. The diagram includes non-inverted and inverted PWM outputs. The small horizontal line marks on the TCNT0 slopes represent Compare Matches between OCR0x and TCNT0.

Figure 16-7. Phase Correct PWM Mode, Timing Diagram

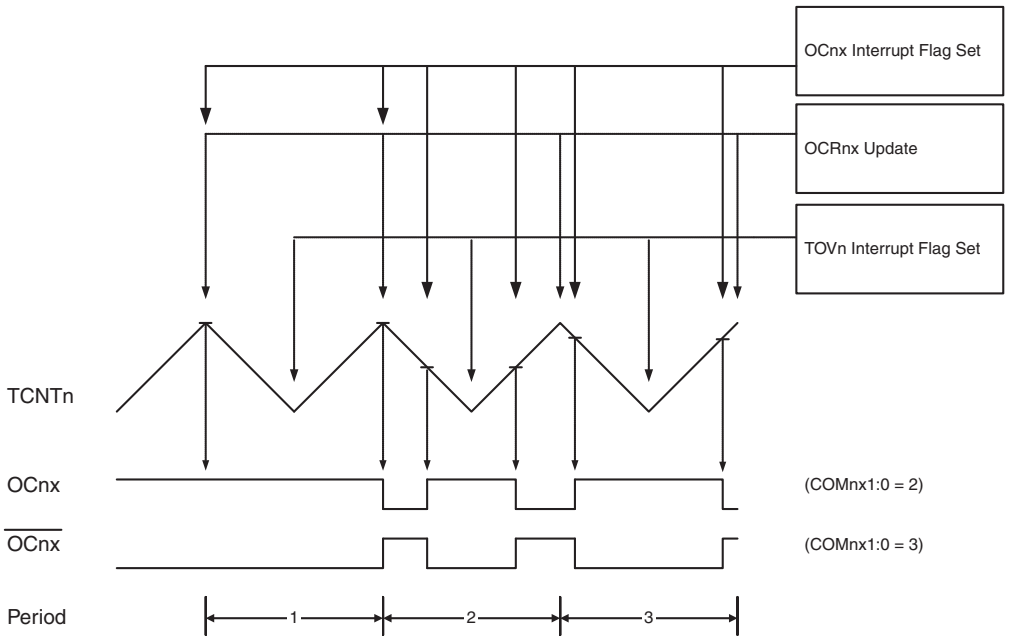

The Timer/Counter Overflow Flag (TOV0) is set each time the counter reaches BOTTOM. The Interrupt Flag can be used to generate an interrupt each time the counter reaches the BOTTOM value.

In phase correct PWM mode, the compare unit allows generation of PWM waveforms on the OC0x pins. Setting the COM0x1:0 bits to two will produce a non-inverted PWM. An inverted PWM output can be generated by setting the COM0x1:0 to three: Setting the COM0A0 bits to one allows the OC0A pin to toggle on Compare Matches if the WGM02 bit is set. This option is not available for the OC0B pin (see Table 16-4 on page 127). The actual OC0x value will only be visible on the port pin if the data direction for the port pin is set as output. The PWM waveform is generated by clearing (or setting) the OC0x Register at the Compare Match between OCR0x and TCNT0 when the counter increments, and setting (or clearing) the OC0x Register at Compare Match between OCR0x and TCNT0 when the counter decrements. The PWM frequency for the output when using phase correct PWM can be calculated by the following equation:

$$f_{OCnxPCPWM} = \frac{f_{\text{clk_I/O}}}{N \cdot 510}$$

The N variable represents the prescale factor (1, 8, 64, 256, or 1024).

The extreme values for the OCR0A Register represent special cases when generating a PWM waveform output in the phase correct PWM mode. If the OCR0A is set equal to BOTTOM, the output will be continuously low and if set equal to MAX the output will be continuously high for non-inverted PWM mode. For inverted PWM the output will have the opposite logic values.

At the very start of period 2 in Figure 16-7 OCnx has a transition from high to low even though there is no Compare Match. The point of this transition is to guarantee symmetry around BOTTOM. There are two cases that give a transition without Compare Match.

- OCR0A changes its value from MAX, like in Figure 16-7. When the OCR0A value is MAX the OCn pin value is the same as the result of a down-counting Compare Match. To ensure symmetry around BOTTOM the OCn value at MAX must correspond to the result of an up-counting Compare Match.
- The timer starts counting from a value higher than the one in OCR0A, and for that reason misses the Compare Match and hence the OCn change that would have happened on the way up.

16.8 Timer/Counter Timing Diagrams

The Timer/Counter is a synchronous design and the timer clock (clk_{T0}) is therefore shown as a clock enable signal in the following figures. The figures include information on when Interrupt Flags are set. Figure 16-8 contains timing data for basic Timer/Counter operation. The figure shows the count sequence close to the MAX value in all modes other than phase correct PWM mode.

Figure 16-8. Timer/Counter Timing Diagram, no Prescaling

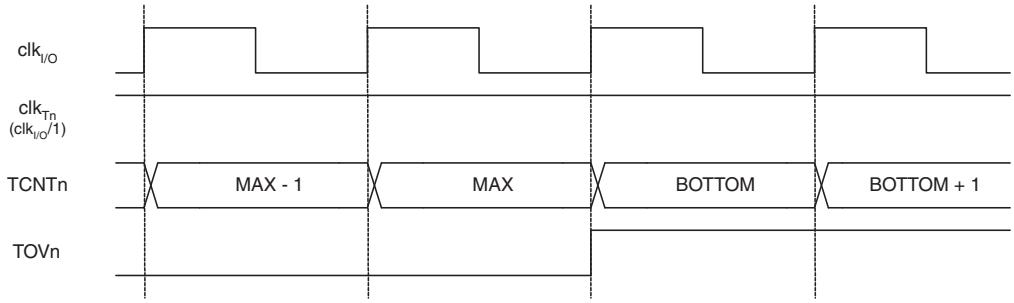

Figure 16-9 shows the same timing data, but with the prescaler enabled.

Figure 16-9. Timer/Counter Timing Diagram, with Prescaler ($f_{clk_I/O}/8$)

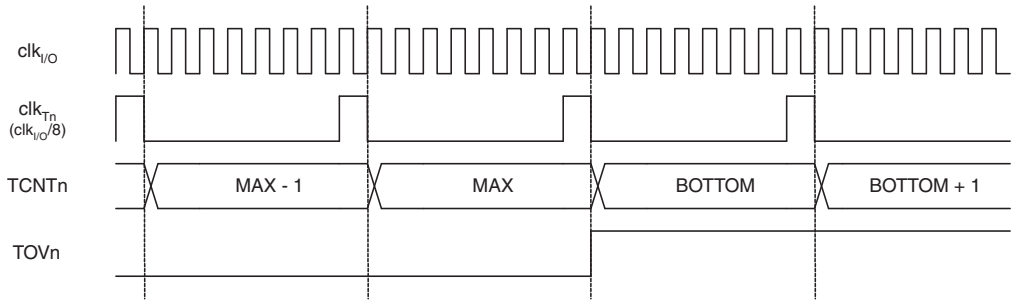

Figure 16-10 shows the setting of OCF0B in all modes and OCF0A in all modes except CTC mode and PWM mode, where OCR0A is TOP.

Figure 16-10. Timer/Counter Timing Diagram, Setting of OCF0x, with Prescaler ($f_{clk_I/O}/8$)

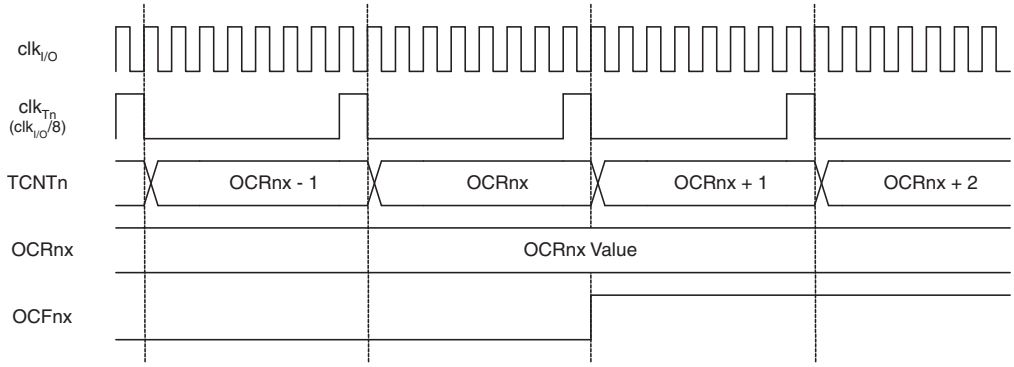

Figure 16-11 on page 125 shows the setting of OCF0A and the clearing of TCNT0 in CTC mode and fast PWM mode where OCR0A is TOP.

Figure 16-11. Timer/Counter Timing Diagram, Clear Timer on Compare Match mode, with Prescaler ($f_{clk_I/O}/8$)

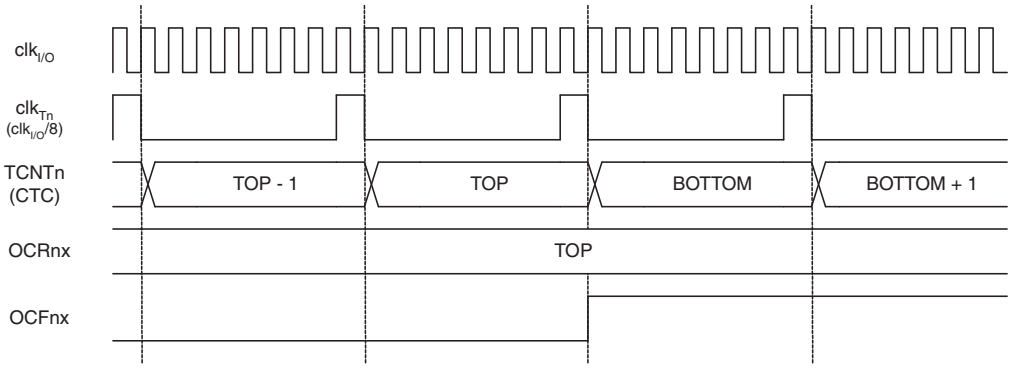

16.9 Register Description

16.9.1 TCCR0A – Timer/Counter Control Register A

Bit	7	6	5	4	3	2	1	0	
0x24 (0x44)	COM0A1	COM0A0	COM0B1	COM0B0	–	–	WGM01	WGM00	TCCR0A
Read/Write	R/W	R/W	R/W	R/W	R	R	R/W	R/W	
Initial Value	0	0	0	0	0	0	0	0	

- **Bits 7:6 – COM0A1:0: Compare Match Output A Mode**

These bits control the Output Compare pin (OC0A) behavior. If one or both of the COM0A1:0 bits are set, the OC0A output overrides the normal port functionality of the I/O pin it is connected to. However, note that the Data Direction Register (DDR) bit corresponding to the OC0A pin must be set in order to enable the output driver.

When OC0A is connected to the pin, the function of the COM0A1:0 bits depends on the WGM02:0 bit setting. Table 16-2 shows the COM0A1:0 bit functionality when the WGM02:0 bits are set to a normal or CTC mode (non-PWM).

Table 16-2. Compare Output Mode, non-PWM Mode

COM0A1	COM0A0	Description
0	0	Normal port operation, OC0A disconnected
0	1	Toggle OC0A on Compare Match
1	0	Clear OC0A on Compare Match
1	1	Set OC0A on Compare Match

Table 16-3 shows the COM0A1:0 bit functionality when the WGM01:0 bits are set to fast PWM mode.

Table 16-3. Compare Output Mode, Fast PWM Mode(1)

COM0A1	COM0A0	Description
0	0	Normal port operation, OC0A disconnected
0	1	WGM02 = 0: Normal Port Operation, OC0A Disconnected WGM02 = 1: Toggle OC0A on Compare Match
1	0	Clear OC0A on Compare Match, set OC0A at BOTTOM (non-inverting mode)
1	1	Set OC0A on Compare Match, clear OC0A at BOTTOM (inverting mode)

Note: 1. A special case occurs when OCR0A equals TOP and COM0A1 is set. In this case, the Compare Match is ignored, but the set or clear is done at BOTTOM. See "Fast PWM Mode" on page 121 for more details.

Table 16-4 on page 127 shows the COM0A1:0 bit functionality when the WGM02:0 bits are set to phase correct PWM mode.

Table 16-4. Compare Output Mode, Phase Correct PWM Mode[1]

COM0A1	COM0A0	Description
0	0	Normal port operation, OC0A disconnected
0	1	WGM02 = 0: Normal Port Operation, OC0A Disconnected WGM02 = 1: Toggle OC0A on Compare Match
1	0	Clear OC0A on Compare Match when up-counting. Set OC0A on Compare Match when down-counting
1	1	Set OC0A on Compare Match when up-counting. Clear OC0A on Compare Match when down-counting

Note: 1. A special case occurs when OCR0A equals TOP and COM0A1 is set. In this case, the Compare Match is ignored, but the set or clear is done at TOP. See "Phase Correct PWM Mode" on page 122 for more details.

- **Bits 5:4 – COM0B1:0: Compare Match Output B Mode**

These bits control the Output Compare pin (OC0B) behavior. If one or both of the COM0B1:0 bits are set, the OC0B output overrides the normal port functionality of the I/O pin it is connected to. However, note that the Data Direction Register (DDR) bit corresponding to the OC0B pin must be set in order to enable the output driver.

When OC0B is connected to the pin, the function of the COM0B1:0 bits depends on the WGM02:0 bit setting. Table 16-5 shows the COM0B1:0 bit functionality when the WGM02:0 bits are set to a normal or CTC mode (non-PWM).

Table 16-5. Compare Output Mode, non-PWM Mode

COM0B1	COM0B0	Description
0	0	Normal port operation, OC0B disconnected
0	1	Toggle OC0B on Compare Match
1	0	Clear OC0B on Compare Match
1	1	Set OC0B on Compare Match

Table 16-6 shows the COM0B1:0 bit functionality when the WGM02:0 bits are set to fast PWM mode.

Table 16-6. Compare Output Mode, Fast PWM Mode[1]

COM0B1	COM0B0	Description
0	0	Normal port operation, OC0B disconnected
0	1	Reserved
1	0	Clear OC0B on Compare Match, set OC0B at BOTTOM (non-inverting mode)
1	1	Set OC0B on Compare Match, clear OC0B at BOTTOM (inverting mode)

Note: 1. A special case occurs when OCR0B equals TOP and COM0B1 is set. In this case, the Compare Match is ignored, but the set or clear is done at BOTTOM. See "Fast PWM Mode" on page 121 for more details.

Table 16-7 shows the COM0B1:0 bit functionality when the WGM02:0 bits are set to phase correct PWM mode.

Table 16-7. Compare Output Mode, Phase Correct PWM Mode[1]

COM0B1	COM0B0	Description
0	0	Normal port operation, OC0B disconnected
0	1	Reserved
1	0	Clear OC0B on Compare Match when up-counting. Set OC0B on Compare Match when down-counting
1	1	Set OC0B on Compare Match when up-counting. Clear OC0B on Compare Match when down-counting

Note: 1. A special case occurs when OCR0B equals TOP and COM0B1 is set. In this case, the Compare Match is ignored, but the set or clear is done at TOP. See "Phase Correct PWM Mode" on page 122 for more details.

- **Bits 3, 2 – Res: Reserved Bits**

These bits are reserved bits and will always read as zero.

- **Bits 1:0 – WGM01:0: Waveform Generation Mode**

Combined with the WGM02 bit found in the TCCR0B Register, these bits control the counting sequence of the counter, the source for maximum (TOP) counter value, and what type of waveform generation to be used, see Table 16-8. Modes of operation supported by the Timer/Counter unit are: Normal mode (counter), Clear Timer on Compare Match (CTC) mode, and two types of Pulse Width Modulation (PWM) modes (see "Modes of Operation" on page 144).

Table 16-8. Waveform Generation Mode Bit Description

Mode	WGM2	WGM1	WGM0	Timer/Counter Mode of Operation	TOP	Update of OCRx at	TOV Flag Set on[1][2]
0	0	0	0	Normal	0xFF	Immediate	MAX
1	0	0	1	PWM, Phase Correct	0xFF	TOP	BOTTOM
2	0	1	0	CTC	OCRA	Immediate	MAX
3	0	1	1	Fast PWM	0xFF	TOP	MAX
4	1	0	0	Reserved	–	–	–
5	1	0	1	PWM, Phase Correct	OCRA	TOP	BOTTOM
6	1	1	0	Reserved	–	–	–
7	1	1	1	Fast PWM	OCRA	BOTTOM	TOP

Note: 1. MAX = 0xFF
2. BOTTOM = 0x00

16.9.2 TCCR0B – Timer/Counter Control Register B

Bit	7	6	5	4	3	2	1	0	
0x25 (0x45)	**FOC0A**	**FOC0B**	**–**	**–**	**WGM02**	**CS02**	**CS01**	**CS00**	**TCCR0B**
Read/Write	W	W	R	R	R/W	R/W	R/W	R/W	
Initial Value	0	0	0	0	0	0	0	0	

- **Bit 7 – FOC0A: Force Output Compare A**

The FOC0A bit is only active when the WGM bits specify a non-PWM mode.

However, for ensuring compatibility with future devices, this bit must be set to zero when TCCR0B is written when operating in PWM mode. When writing a logical one to the FOC0A bit, an immediate Compare Match is forced on the Waveform Generation unit. The OC0A output is changed according to its COM0A1:0 bits setting. Note that the FOC0A bit is implemented as a strobe. Therefore it is the value present in the COM0A1:0 bits that determines the effect of the forced compare.

A FOC0A strobe will not generate any interrupt, nor will it clear the timer in CTC mode using OCR0A as TOP.

The FOC0A bit is always read as zero.

- **Bit 6 – FOC0B: Force Output Compare B**

The FOC0B bit is only active when the WGM bits specify a non-PWM mode.

However, for ensuring compatibility with future devices, this bit must be set to zero when TCCR0B is written when operating in PWM mode. When writing a logical one to the FOC0B bit, an immediate Compare Match is forced on the Waveform Generation unit. The OC0B output is changed according to its COM0B1:0 bits setting. Note that the FOC0B bit is implemented as a strobe. Therefore it is the value present in the COM0B1:0 bits that determines the effect of the forced compare.

A FOC0B strobe will not generate any interrupt, nor will it clear the timer in CTC mode using OCR0B as TOP.

The FOC0B bit is always read as zero.

- **Bits 5:4 – Res: Reserved Bits**

These bits are reserved bits and will always read as zero.

- **Bit 3 – WGM02: Waveform Generation Mode**

See the description in the “TCCR0A – Timer/Counter Control Register A” on page 126.

- **Bits 2:0 – CS02:0: Clock Select**

The three Clock Select bits select the clock source to be used by the Timer/Counter, see Table 16-9 on page 130.

Table 16-9. Clock Select Bit Description

CS02	CS01	CS00	Description
0	0	0	No clock source (Timer/Counter stopped)
0	0	1	$clk_{I/O}$/(No prescaling)
0	1	0	$clk_{I/O}$/8 (From prescaler)
0	1	1	$clk_{I/O}$/64 (From prescaler)
1	0	0	$clk_{I/O}$/256 (From prescaler)
1	0	1	$clk_{I/O}$/1024 (From prescaler)
1	1	0	External clock source on T0 pin. Clock on falling edge
1	1	1	External clock source on T0 pin. Clock on rising edge

If external pin modes are used for the Timer/Counter0, transitions on the T0 pin will clock the counter even if the pin is configured as an output. This feature allows software control of the counting.

16.9.3 TCNT0 – Timer/Counter Register

Bit	7	6	5	4	3	2	1	0	
0x26 (0x46)	TCNT0[7:0]								TCNT0
Read/Write	R/W	R/W	R/W	R/W	R/W	R/W	R/W	R/W	
Initial Value	0	0	0	0	0	0	0	0	

The Timer/Counter Register gives direct access, both for read and write operations, to the Timer/Counter unit 8-bit counter. Writing to the TCNT0 Register blocks (removes) the Compare Match on the following timer clock. Modifying the counter (TCNT0) while the counter is running, introduces a risk of missing a Compare Match between TCNT0 and the OCR0x Registers.

16.9.4 OCR0A – Output Compare Register A

Bit	7	6	5	4	3	2	1	0	
0x27 (0x47)	OCR0A[7:0]								OCR0A
Read/Write	R/W	R/W	R/W	R/W	R/W	R/W	R/W	R/W	
Initial Value	0	0	0	0	0	0	0	0	

The Output Compare Register A contains an 8-bit value that is continuously compared with the counter value (TCNT0). A match can be used to generate an Output Compare interrupt, or to generate a waveform output on the OC0A pin.

16.9.5 OCR0B – Output Compare Register B

Bit	7	6	5	4	3	2	1	0	
0x28 (0x48)	OCR0B[7:0]								OCR0B
Read/Write	R/W	R/W	R/W	R/W	R/W	R/W	R/W	R/W	
Initial Value	0	0	0	0	0	0	0	0	

The Output Compare Register B contains an 8-bit value that is continuously compared with the counter value (TCNT0). A match can be used to generate an Output Compare interrupt, or to generate a waveform output on the OC0B pin.

16.9.6 TIMSK0 – Timer/Counter Interrupt Mask Register

Bit	7	6	5	4	3	2	1	0	
(0x6E)	–	–	–	–	–	OCIE0B	OCIE0A	TOIE0	TIMSK0
Read/Write	R	R	R	R	R	R/W	R/W	R/W	
Initial Value	0	0	0	0	0	0	0	0	

- **Bits 7:3, 0 – Res: Reserved Bits**

These bits are reserved bits and will always read as zero.

- **Bit 2 – OCIE0B: Timer/Counter Output Compare Match B Interrupt Enable**

When the OCIE0B bit is written to one, and the I-bit in the Status Register is set, the Timer/Counter Compare Match B interrupt is enabled. The corresponding interrupt is executed if a Compare Match in Timer/Counter occurs, that is, when the OCF0B bit is set in the Timer/Counter Interrupt Flag Register – TIFR0.

- **Bit 1 – OCIE0A: Timer/Counter0 Output Compare Match A Interrupt Enable**

When the OCIE0A bit is written to one, and the I-bit in the Status Register is set, the Timer/Counter0 Compare Match A interrupt is enabled. The corresponding interrupt is executed if a Compare Match in Timer/Counter0 occurs, that is, when the OCF0A bit is set in the Timer/Counter 0 Interrupt Flag Register – TIFR0.

- **Bit 0 – TOIE0: Timer/Counter0 Overflow Interrupt Enable**

When the TOIE0 bit is written to one, and the I-bit in the Status Register is set, the Timer/Counter0 Overflow interrupt is enabled. The corresponding interrupt is executed if an overflow in Timer/Counter0 occurs, that is, when the TOV0 bit is set in the Timer/Counter 0 Interrupt Flag Register – TIFR0.

16.9.7 TIFR0 – Timer/Counter 0 Interrupt Flag Register

Bit	7	6	5	4	3	2	1	0	
0x15 (0x35)	–	–	–	–	–	OCF0B	OCF0A	TOV0	TIFR0
Read/Write	R	R	R	R	R	R/W	R/W	R/W	
Initial Value	0	0	0	0	0	0	0	0	

- **Bits 7:3, 0 – Res: Reserved Bits**

These bits are reserved bits and will always read as zero.

- **Bit 2 – OCF0B: Timer/Counter 0 Output Compare B Match Flag**

The OCF0B bit is set when a Compare Match occurs between the Timer/Counter and the data in OCR0B – Output Compare Register0 B. OCF0B is cleared by hardware when executing the corresponding interrupt handling vector. Alternatively, OCF0B is cleared by writing a logic one to the flag. When the I-bit in SREG, OCIE0B (Timer/Counter Compare B Match Interrupt Enable), and OCF0B are set, the Timer/Counter Compare Match Interrupt is executed.

- **Bit 1 – OCF0A: Timer/Counter 0 Output Compare A Match Flag**

The OCF0A bit is set when a Compare Match occurs between the Timer/Counter0 and the data in OCR0A – Output Compare Register0. OCF0A is cleared by hardware when executing the corresponding interrupt handling vector. Alternatively, OCF0A is cleared by writing a logic one to the flag. When the I-bit in SREG, OCIE0A (Timer/Counter0 Compare Match Interrupt Enable), and OCF0A are set, the Timer/Counter0 Compare Match Interrupt is executed.

- **Bit 0 – TOV0: Timer/Counter0 Overflow Flag**

The bit TOV0 is set when an overflow occurs in Timer/Counter0. TOV0 is cleared by hardware when executing the corresponding interrupt handling vector. Alternatively, TOV0 is cleared by writing a logic one to the flag. When the

SREG I-bit, TOIE0 (Timer/Counter0 Overflow Interrupt Enable), and TOV0 are set, the Timer/Counter0 Overflow interrupt is executed.

The setting of this flag is dependent of the WGM02:0 bit setting. Refer to Table 16-8, “Waveform Generation Mode Bit Description” on page 128.

17. 16-bit Timer/Counter (Timer/Counter 1, 3, 4, and 5)

17.1 Features

- **True 16-bit Design (that is, allows 16-bit PWM)**
- **Three independent Output Compare Units**
- **Double Buffered Output Compare Registers**
- **One Input Capture Unit**
- **Input Capture Noise Canceler**
- **Clear Timer on Compare Match (Auto Reload)**
- **Glitch-free, Phase Correct Pulse Width Modulator (PWM)**
- **Variable PWM Period**
- **Frequency Generator**
- **External Event Counter**
- **Twenty independent interrupt sources (TOV1, OCF1A, OCF1B, OCF1C, ICF1, TOV3, OCF3A, OCF3B, OCF3C, ICF3, TOV4, OCF4A, OCF4B, OCF4C, ICF4, TOV5, OCF5A, OCF5B, OCF5C, and ICF5)**

17.2 Overview

The 16-bit Timer/Counter unit allows accurate program execution timing (event management), wave generation, and signal timing measurement.

Most register and bit references in this section are written in general form. A lower case “n” replaces the Timer/Counter number, and a lower case “x” replaces the Output Compare unit channel. However, when using the register or bit defines in a program, the precise form must be used, that is, TCNT1 for accessing Timer/Counter1 counter value and so on.

A simplified block diagram of the 16-bit Timer/Counter is shown in Figure 17-1 on page 134. For the actual placement of I/O pins, see “TQFP-pinout ATmega640/1280/2560” on page 2 and “Pinout ATmega1281/2561” on page 4. CPU accessible I/O Registers, including I/O bits and I/O pins, are shown in bold. The device-specific I/O Register and bit locations are listed in the “Register Description” on page 154.

The Power Reduction Timer/Counter1 bit, PRTIM1, in “PRR0 – Power Reduction Register 0” on page 55 must be written to zero to enable Timer/Counter1 module.

The Power Reduction Timer/Counter3 bit, PRTIM3, in “PRR1 – Power Reduction Register 1” on page 56 must be written to zero to enable Timer/Counter3 module.

The Power Reduction Timer/Counter4 bit, PRTIM4, in “PRR1 – Power Reduction Register 1” on page 56 must be written to zero to enable Timer/Counter4 module.

The Power Reduction Timer/Counter5 bit, PRTIM5, in “PRR1 – Power Reduction Register 1” on page 56 must be written to zero to enable Timer/Counter5 module.

Timer/Counter4 and Timer/Counter5 only have full functionality in the ATmega640/1280/2560. Input capture and output compare are not available in the ATmega1281/2561.

Figure 17-1. 16-bit Timer/Counter Block Diagram[1]

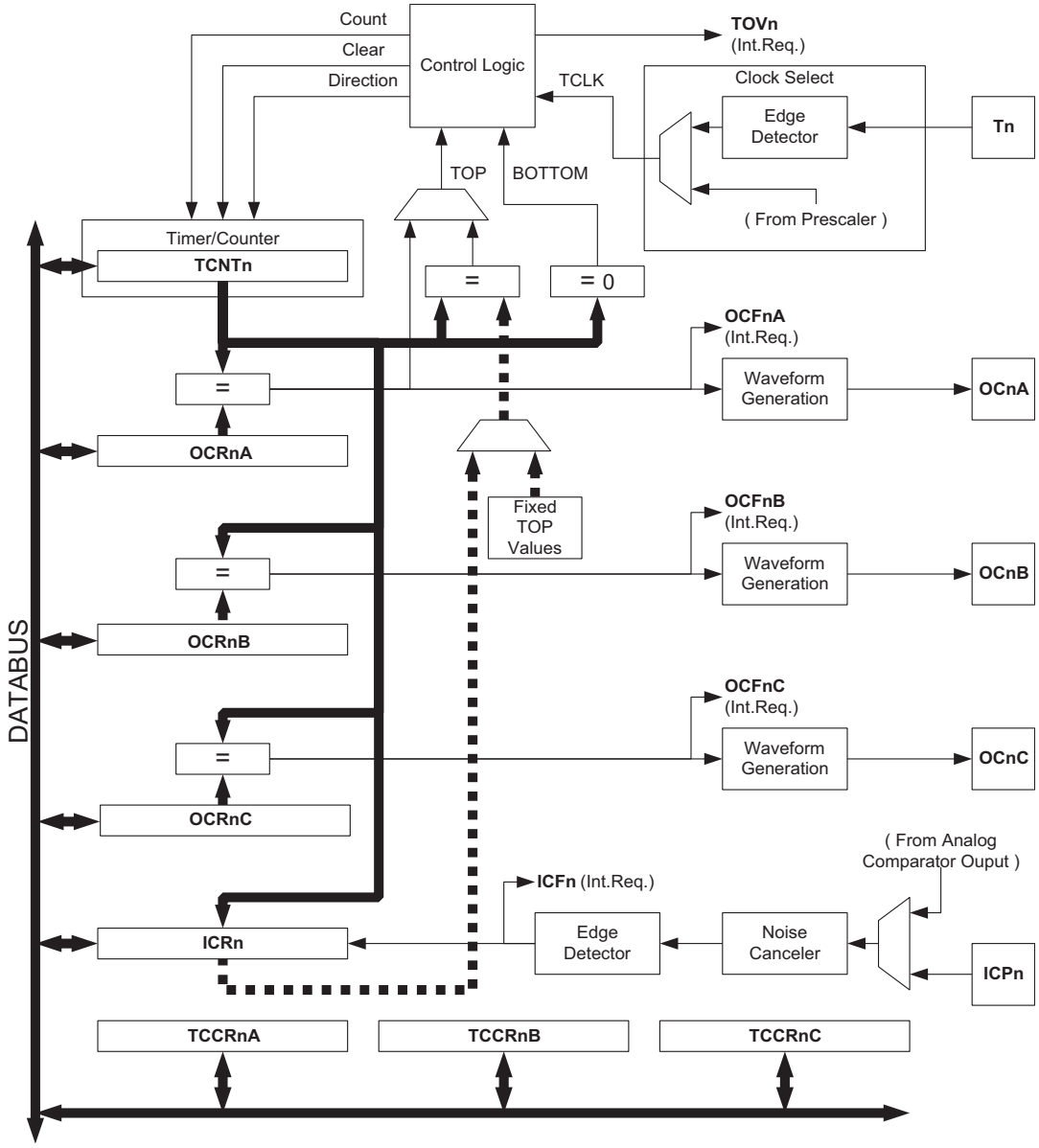

Note: 1. Refer to Figure 1-1 on page 2, Table 13-5 on page 76, and Table 13-11 on page 80 for Timer/Counter1 and 3 and 3 pin placement and description.

17.2.1 Registers

The Timer/Counter (TCNTn), Output Compare Registers (OCRnA/B/C), and Input Capture Register (ICRn) are all 16-bit registers. Special procedures must be followed when accessing the 16-bit registers. These procedures are described in the section "Accessing 16-bit Registers" on page 135. The Timer/Counter Control Registers (TCCRnA/B/C) are 8-bit registers and have no CPU access restrictions. Interrupt requests (shorten as Int.Req.) signals are all visible in the Timer Interrupt Flag Register (TIFRn). All interrupts are individually masked with the Timer Interrupt Mask Register (TIMSKn). TIFRn and TIMSKn are not shown in the figure since these registers are shared by other timer units.

The Timer/Counter can be clocked internally, via the prescaler, or by an external clock source on the Tn pin. The Clock Select logic block controls which clock source and edge the Timer/Counter uses to increment (or decrement)

its value. The Timer/Counter is inactive when no clock source is selected. The output from the clock select logic is referred to as the timer clock (clk_{Tn}).

The double buffered Output Compare Registers (OCRnA/B/C) are compared with the Timer/Counter value at all time. The result of the compare can be used by the Waveform Generator to generate a PWM or variable frequency output on the Output Compare pin (OCnA/B/C). See “Output Compare Units” on page 141. The compare match event will also set the Compare Match Flag (OCFnA/B/C) which can be used to generate an Output Compare interrupt request.

The Input Capture Register can capture the Timer/Counter value at a given external (edge triggered) event on either the Input Capture pin (ICPn) or on the Analog Comparator pins (see “AC – Analog Comparator” on page 265). The Input Capture unit includes a digital filtering unit (Noise Canceler) for reducing the chance of capturing noise spikes.

The TOP value, or maximum Timer/Counter value, can in some modes of operation be defined by either the OCRnA Register, the ICRn Register, or by a set of fixed values. When using OCRnA as TOP value in a PWM mode, the OCRnA Register can not be used for generating a PWM output. However, the TOP value will in this case be double buffered allowing the TOP value to be changed in run time. If a fixed TOP value is required, the ICRn Register can be used as an alternative, freeing the OCRnA to be used as PWM output.

17.2.2 Definitions

The following definitions are used extensively throughout the document:

Table 17-1. Definitions

BOTTOM	The counter reaches the *BOTTOM* when it becomes 0x0000.
MAX	The counter reaches its *MAX*imum when it becomes 0xFFFF (decimal 65535).
TOP	The counter reaches the *TOP* when it becomes equal to the highest value in the count sequence. The TOP value can be assigned to be one of the fixed values: 0x00FF, 0x01FF, or 0x03FF, or to the value stored in the OCRnA or ICRn Register. The assignment is dependent of the mode of operation.

17.3 Accessing 16-bit Registers

The TCNTn, OCRnA/B/C, and ICRn are 16-bit registers that can be accessed by the AVR CPU via the 8-bit data bus. The 16-bit register must be byte accessed using two read or write operations. Each 16-bit timer has a single 8-bit register for temporary storing of the high byte of the 16-bit access. The same Temporary Register is shared between all 16-bit registers within each 16-bit timer. Accessing the low byte triggers the 16-bit read or write operation. When the low byte of a 16-bit register is written by the CPU, the high byte stored in the Temporary Register, and the low byte written are both copied into the 16-bit register in the same clock cycle. When the low byte of a 16-bit register is read by the CPU, the high byte of the 16-bit register is copied into the Temporary Register in the same clock cycle as the low byte is read.

Not all 16-bit accesses uses the Temporary Register for the high byte. Reading the OCRnA/B/C 16-bit registers does not involve using the Temporary Register.

To do a 16-bit write, the high byte must be written before the low byte. For a 16-bit read, the low byte must be read before the high byte.

The following code examples show how to access the 16-bit timer registers assuming that no interrupts updates the temporary register. The same principle can be used directly for accessing the OCRnA/B/C and ICRn Registers. Note that when using “C”, the compiler handles the 16-bit access.

Assembly Code Examples[1]

``
...
; Set TCNTn to 0x01FF
ldi r17,0x01
ldi r16,0xFF
out TCNTnH,r17
out TCNTnL,r16
; Read TCNTn into r17:r16
in r16,TCNTnL
in r17,TCNTnH
...
``

C Code Examples[1]

``
unsigned int i;
...
/* Set TCNTn to 0x01FF */
TCNTn = 0x1FF;
/* Read TCNTn into i */
i = TCNTn;
...
``

Note: 1. See “About Code Examples” on page 10.

The assembly code example returns the TCNTn value in the r17:r16 register pair.

It is important to notice that accessing 16-bit registers are atomic operations. If an interrupt occurs between the two instructions accessing the 16-bit register, and the interrupt code updates the temporary register by accessing the same or any other of the 16-bit Timer Registers, then the result of the access outside the interrupt will be corrupted. Therefore, when both the main code and the interrupt code update the temporary register, the main code must disable the interrupts during the 16-bit access.

The following code examples show how to do an atomic read of the TCNTn Register contents. Reading any of the OCRnA/B/C or ICRn Registers can be done by using the same principle.

Assembly Code Example[1]

```
TIM16_ReadTCNTn:
  ; Save global interrupt flag
  in r18,SREG
  ; Disable interrupts
  cli
  ; Read TCNTn into r17:r16
  in r16,TCNTnL
  in r17,TCNTnH
  ; Restore global interrupt flag
  out SREG,r18
  ret
```

C Code Example[1]

```
unsigned int TIM16_ReadTCNTn( void )
{
  unsigned char sreg;
  unsigned int i;
  /* Save global interrupt flag */
  sreg = SREG;
  /* Disable interrupts */
  __disable_interrupt();
  /* Read TCNTn into i */
  i = TCNTn;
  /* Restore global interrupt flag */
  SREG = sreg;
  return i;
}
```

Note: 1. See “About Code Examples” on page 10.

The assembly code example returns the TCNTn value in the r17:r16 register pair.

The following code examples show how to do an atomic write of the TCNTn Register contents. Writing any of the OCRnA/B/C or ICRn Registers can be done by using the same principle.

Assembly Code Example[1]

```
TIM16_WriteTCNTn:
  ; Save global interrupt flag
  in r18,SREG
  ; Disable interrupts
  cli
  ; Set TCNTn to r17:r16
  out TCNTnH,r17
  out TCNTnL,r16
  ; Restore global interrupt flag
  out SREG,r18
  ret
```

C Code Example[1]

```
void TIM16_WriteTCNTn( unsigned int i )
{
  unsigned char sreg;
  unsigned int i;
  /* Save global interrupt flag */
  sreg = SREG;
  /* Disable interrupts */
  __disable_interrupt();
  /* Set TCNTn to i */
  TCNTn = i;
  /* Restore global interrupt flag */
  SREG = sreg;
}
```

Note: 1. See “About Code Examples” on page 10.

The assembly code example requires that the r17:r16 register pair contains the value to be written to TCNTn.

17.3.1 Reusing the Temporary High Byte Register

If writing to more than one 16-bit register where the high byte is the same for all registers written, then the high byte only needs to be written once. However, note that the same rule of atomic operation described previously also applies in this case.

17.4 Timer/Counter Clock Sources

The Timer/Counter can be clocked by an internal or an external clock source. The clock source is selected by the Clock Select logic which is controlled by the *Clock Select* (CSn2:0) bits located in the *Timer/Counter control Register B* (TCCRnB). For details on clock sources and prescaler, see “Timer/Counter 0, 1, 3, 4, and 5 Prescaler” on page 164.

17.5 Counter Unit

The main part of the 16-bit Timer/Counter is the programmable 16-bit bi-directional counter unit. Figure 17-2 shows a block diagram of the counter and its surroundings.

Figure 17-2. Counter Unit Block Diagram

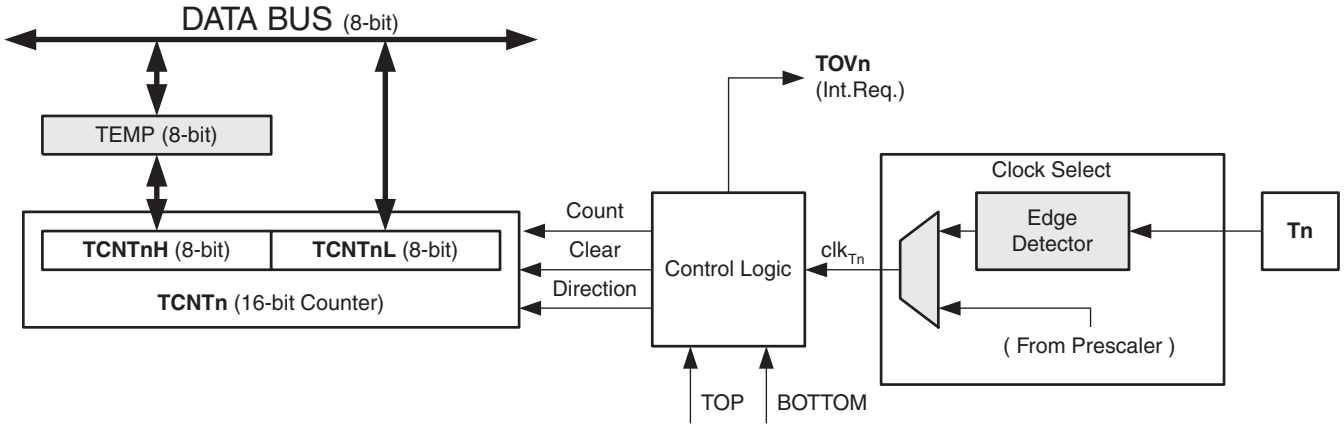

Signal description (internal signals):

Count	Increment or decrement TCNTn by 1.
Direction	Select between increment and decrement.
Clear	Clear TCNTn (set all bits to zero).
clk_{Tn}	Timer/Counter clock.
TOP	Signalize that TCNTn has reached maximum value.
BOTTOM	Signalize that TCNTn has reached minimum value (zero).

The 16-bit counter is mapped into two 8-bit I/O memory locations: *Counter High* (TCNTnH) containing the upper eight bits of the counter, and *Counter Low* (TCNTnL) containing the lower eight bits. The TCNTnH Register can only be indirectly accessed by the CPU. When the CPU does an access to the TCNTnH I/O location, the CPU accesses the high byte temporary register (TEMP). The temporary register is updated with the TCNTnH value when the TCNTnL is read, and TCNTnH is updated with the temporary register value when TCNTnL is written. This allows the CPU to read or write the entire 16-bit counter value within one clock cycle via the 8-bit data bus. It is important to notice that there are special cases of writing to the TCNTn Register when the counter is counting that will give unpredictable results. The special cases are described in the sections where they are of importance.

Depending on the mode of operation used, the counter is cleared, incremented, or decremented at each *timer clock* (clk_{Tn}). The clk_{Tn} can be generated from an external or internal clock source, selected by the *Clock Select* bits (CSn2:0). When no clock source is selected (CSn2:0 = 0) the timer is stopped. However, the TCNTn value can be accessed by the CPU, independent of whether clk_{Tn} is present or not. A CPU write overrides (has priority over) all counter clear or count operations.

The counting sequence is determined by the setting of the *Waveform Generation mode* bits (WGMn3:0) located in the *Timer/Counter Control Registers* A and B (TCCRnA and TCCRnB). There are close connections between how the counter behaves (counts) and how waveforms are generated on the Output Compare outputs OCnx. For more details about advanced counting sequences and waveform generation, see "Modes of Operation" on page 144.

The Timer/Counter Overflow Flag (TOVn) is set according to the mode of operation selected by the WGMn3:0 bits. TOVn can be used for generating a CPU interrupt.

17.6 Input Capture Unit

The Timer/Counter incorporates an input capture unit that can capture external events and give them a time-stamp indicating time of occurrence. The external signal indicating an event, or multiple events, can be applied via the ICPn pin or alternatively, for the Timer/Counter1 only, via the Analog Comparator unit. The time-stamps can then be used to calculate frequency, duty-cycle, and other features of the signal applied. Alternatively the time-stamps can be used for creating a log of the events.

The Input Capture unit is illustrated by the block diagram shown in Figure 17-3. The elements of the block diagram that are not directly a part of the input capture unit are gray shaded. The small “n” in register and bit names indicates the Timer/Counter number.

Figure 17-3. Input Capture Unit Block Diagram

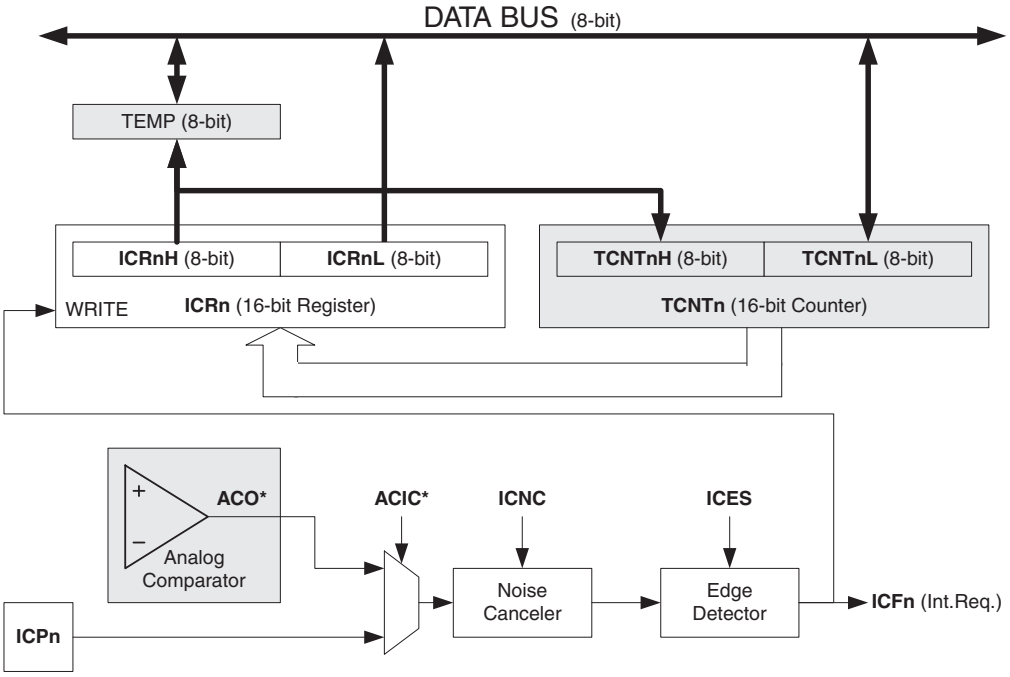

Note: The Analog Comparator Output (ACO) can only trigger the Timer/Counter1 ICP – not Timer/Counter3, 4 or 5.

When a change of the logic level (an event) occurs on the *Input Capture Pin* (ICPn), alternatively on the *analog Comparator output* (ACO), and this change confirms to the setting of the edge detector, a capture will be triggered. When a capture is triggered, the 16-bit value of the counter (TCNTn) is written to the *Input Capture Register* (ICRn). The *Input Capture Flag* (ICFn) is set at the same system clock as the TCNTn value is copied into ICRn Register. If enabled (TICIEn = 1), the input capture flag generates an input capture interrupt. The ICFn flag is automatically cleared when the interrupt is executed. Alternatively the ICFn flag can be cleared by software by writing a logical one to its I/O bit location.

Reading the 16-bit value in the *Input Capture Register* (ICRn) is done by first reading the low byte (ICRnL) and then the high byte (ICRnH). When the low byte is read the high byte is copied into the high byte Temporary Register (TEMP). When the CPU reads the ICRnH I/O location it will access the TEMP Register.

The ICRn Register can only be written when using a Waveform Generation mode that utilizes the ICRn Register for defining the counter’s TOP value. In these cases the *Waveform Generation mode* (WGMn3:0) bits must be set before the TOP value can be written to the ICRn Register. When writing the ICRn Register the high byte must be written to the ICRnH I/O location before the low byte is written to ICRnL.

For more information on how to access the 16-bit registers refer to “Accessing 16-bit Registers” on page 135.

17.6.1 Input Capture Trigger Source

The main trigger source for the input capture unit is the *Input Capture Pin* (ICPn). Timer/Counter1 can alternatively use the analog comparator output as trigger source for the input capture unit. The Analog Comparator is selected as trigger source by setting the *analog Comparator Input Capture* (ACIC) bit in the *Analog Comparator Control and Status Register* (ACSR). Be aware that changing trigger source can trigger a capture. The input capture flag must therefore be cleared after the change.

Both the *Input Capture Pin* (ICPn) and the *Analog Comparator output* (ACO) inputs are sampled using the same technique as for the Tn pin (Figure 18-1 on page 164). The edge detector is also identical. However, when the noise canceler is enabled, additional logic is inserted before the edge detector, which increases the delay by four system clock cycles. Note that the input of the noise canceler and edge detector is always enabled unless the Timer/Counter is set in a Waveform Generation mode that uses ICRn to define TOP.

An input capture can be triggered by software by controlling the port of the ICPn pin.

17.6.2 Noise Canceler

The noise canceler improves noise immunity by using a simple digital filtering scheme. The noise canceler input is monitored over four samples, and all four must be equal for changing the output that in turn is used by the edge detector.

The noise canceler is enabled by setting the *Input Capture Noise Canceler* (ICNCn) bit in *Timer/Counter Control Register B* (TCCRnB). When enabled the noise canceler introduces additional four system clock cycles of delay from a change applied to the input, to the update of the ICRn Register. The noise canceler uses the system clock and is therefore not affected by the prescaler.

17.6.3 Using the Input Capture Unit

The main challenge when using the Input Capture unit is to assign enough processor capacity for handling the incoming events. The time between two events is critical. If the processor has not read the captured value in the ICRn Register before the next event occurs, the ICRn will be overwritten with a new value. In this case the result of the capture will be incorrect.

When using the Input Capture interrupt, the ICRn Register should be read as early in the interrupt handler routine as possible. Even though the Input Capture interrupt has relatively high priority, the maximum interrupt response time is dependent on the maximum number of clock cycles it takes to handle any of the other interrupt requests.

Using the Input Capture unit in any mode of operation when the TOP value (resolution) is actively changed during operation, is not recommended.

Measurement of an external signal's duty cycle requires that the trigger edge is changed after each capture. Changing the edge sensing must be done as early as possible after the ICRn Register has been read. After a change of the edge, the Input Capture Flag (ICFn) must be cleared by software (writing a logical one to the I/O bit location). For measuring frequency only, the clearing of the ICFn Flag is not required (if an interrupt handler is used).

17.7 Output Compare Units

The 16-bit comparator continuously compares TCNTn with the *Output Compare Register* (OCRnx). If TCNT equals OCRnx the comparator signals a match. A match will set the *Output Compare Flag* (OCFnx) at the next timer clock cycle. If enabled (OCIEnx = 1), the Output Compare Flag generates an Output Compare interrupt. The OCFnx Flag is automatically cleared when the interrupt is executed. Alternatively the OCFnx Flag can be cleared by software by writing a logical one to its I/O bit location. The Waveform Generator uses the match signal to generate an output according to operating mode set by the *Waveform Generation mode* (WGMn3:0) bits and *Compare Output mode* (COMnx1:0) bits. The TOP and BOTTOM signals are used by the Waveform Generator for handling the special cases of the extreme values in some modes of operation. See "Modes of Operation" on page 144.

A special feature of Output Compare unit A allows it to define the Timer/Counter TOP value (that is, counter resolution). In addition to the counter resolution, the TOP value defines the period time for waveforms generated by the Waveform Generator.

Figure 17-4 shows a block diagram of the Output Compare unit. The small “n” in the register and bit names indicates the device number (n = n for Timer/Counter n), and the “x” indicates Output Compare unit (A/B/C). The elements of the block diagram that are not directly a part of the Output Compare unit are gray shaded.

Figure 17-4. Output Compare Unit, Block Diagram

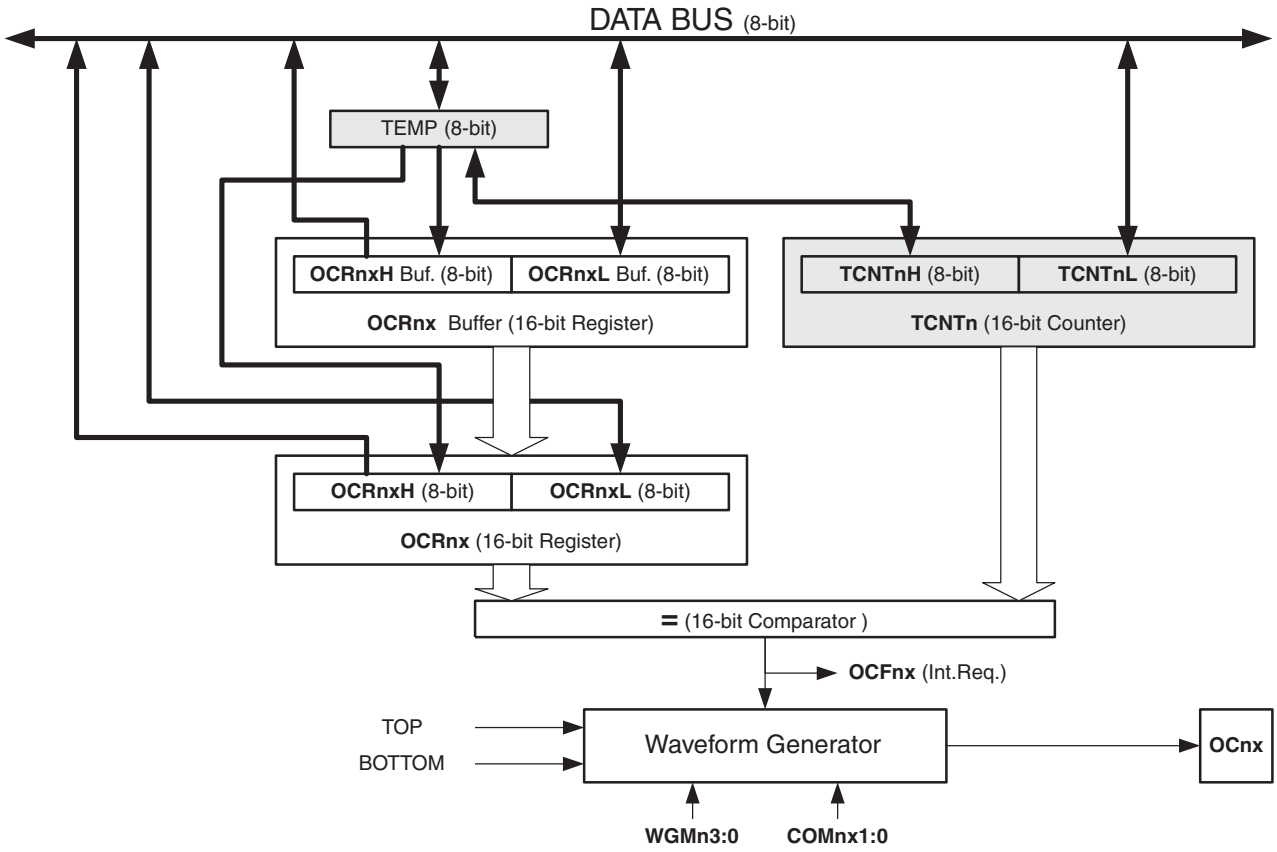

The OCRnx Register is double buffered when using any of the twelve *Pulse Width Modulation* (PWM) modes. For the Normal and *Clear Timer on Compare* (CTC) modes of operation, the double buffering is disabled. The double buffering synchronizes the update of the OCRnx Compare Register to either TOP or BOTTOM of the counting sequence. The synchronization prevents the occurrence of odd-length, non-symmetrical PWM pulses, thereby making the output glitch-free.

The OCRnx Register access may seem complex, but this is not case. When the double buffering is enabled, the CPU has access to the OCRnx Buffer Register, and if double buffering is disabled the CPU will access the OCRnx directly. The content of the OCR1x (Buffer or Compare) Register is only changed by a write operation (the Timer/Counter does not update this register automatically as the TCNT1 and ICR1 Register). Therefore OCR1x is not read via the high byte temporary register (TEMP). However, it is a good practice to read the low byte first as when accessing other 16-bit registers. Writing the OCRnx Registers must be done via the TEMP Register since the compare of all 16 bits is done continuously. The high byte (OCRnxH) has to be written first. When the high byte I/O location is written by the CPU, the TEMP Register will be updated by the value written. Then when the low byte (OCRnxL) is written to the lower eight bits, the high byte will be copied into the upper 8-bits of either the OCRnx buffer or OCRnx Compare Register in the same system clock cycle.

For more information of how to access the 16-bit registers refer to “Accessing 16-bit Registers” on page 135.

17.7.1 Force Output Compare

In non-PWM Waveform Generation modes, the match output of the comparator can be forced by writing a one to the *Force Output Compare* (FOCnx) bit. Forcing compare match will not set the OCFnx Flag or reload/clear the timer, but the OCnx pin will be updated as if a real compare match had occurred (the COMn1:0 bits settings define whether the OCnx pin is set, cleared or toggled).

17.7.2 Compare Match Blocking by TCNTn Write

All CPU writes to the TCNTn Register will block any compare match that occurs in the next timer clock cycle, even when the timer is stopped. This feature allows OCRnx to be initialized to the same value as TCNTn without triggering an interrupt when the Timer/Counter clock is enabled.

17.7.3 Using the Output Compare Unit

Since writing TCNTn in any mode of operation will block all compare matches for one timer clock cycle, there are risks involved when changing TCNTn when using any of the Output Compare channels, independent of whether the Timer/Counter is running or not. If the value written to TCNTn equals the OCRnx value, the compare match will be missed, resulting in incorrect waveform generation. Do not write the TCNTn equal to TOP in PWM modes with variable TOP values. The compare match for the TOP will be ignored and the counter will continue to 0xFFFF. Similarly, do not write the TCNTn value equal to BOTTOM when the counter is downcounting.

The setup of the OCnx should be performed before setting the Data Direction Register for the port pin to output. The easiest way of setting the OCnx value is to use the Force Output Compare (FOCnx) strobe bits in Normal mode. The OCnx Register keeps its value even when changing between Waveform Generation modes.

Be aware that the COMnx1:0 bits are not double buffered together with the compare value. Changing the COMnx1:0 bits will take effect immediately.

17.8 Compare Match Output Unit

The Compare Output mode (COMnx1:0) bits have two functions. The Waveform Generator uses the COMnx1:0 bits for defining the Output Compare (OCnx) state at the next compare match. Secondly the COMnx1:0 bits control the OCnx pin output source. Figure 17-5 on page 144 shows a simplified schematic of the logic affected by the COMnx1:0 bit setting. The I/O Registers, I/O bits, and I/O pins in the figure are shown in bold. Only the parts of the general I/O Port Control Registers (DDR and PORT) that are affected by the COMnx1:0 bits are shown. When referring to the OCnx state, the reference is for the internal OCnx Register, not the OCnx pin. If a system reset occur, the OCnx Register is reset to “0”.

Figure 17-5. Compare Match Output Unit, Schematic

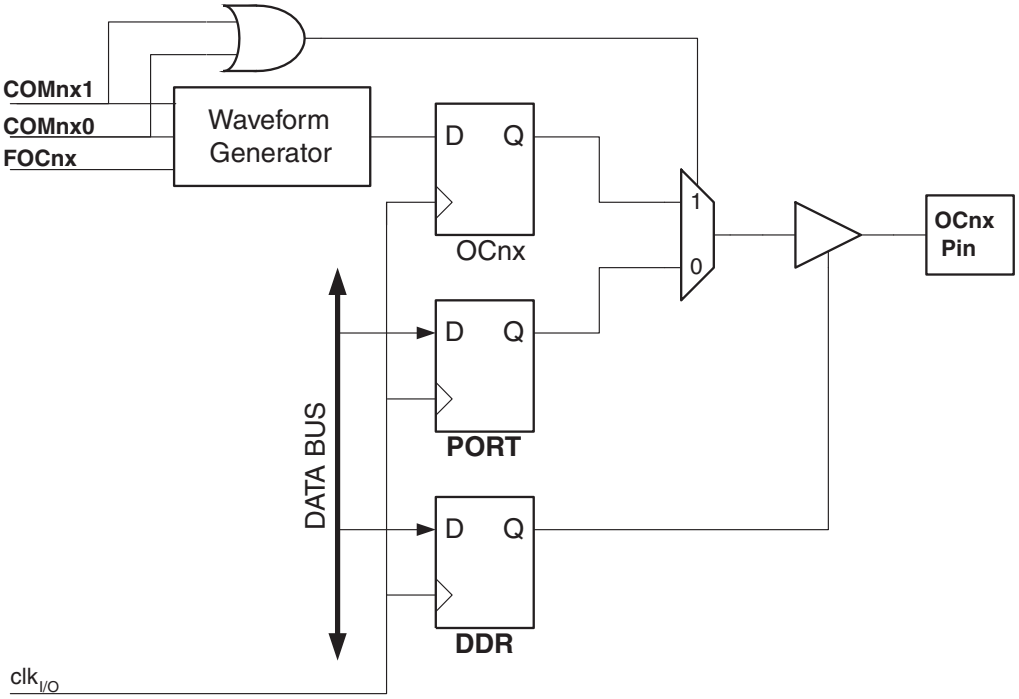

The general I/O port function is overridden by the Output Compare (OCnx) from the Waveform Generator if either of the COMnx1:0 bits are set. However, the OCnx pin direction (input or output) is still controlled by the *Data Direction Register* (DDR) for the port pin. The Data Direction Register bit for the OCnx pin (DDR_OCnx) must be set as output before the OCnx value is visible on the pin. The port override function is generally independent of the Waveform Generation mode, but there are some exceptions. Refer to Table 17-3 on page 155, Table 17-4 on page 155 and Table 17-5 on page 155 for details.

The design of the Output Compare pin logic allows initialization of the OCnx state before the output is enabled. Note that some COMnx1:0 bit settings are reserved for certain modes of operation. See “Register Description” on page 154.

The COMnx1:0 bits have no effect on the Input Capture unit.

17.8.1 Compare Output Mode and Waveform Generation

The Waveform Generator uses the COMnx1:0 bits differently in normal, CTC, and PWM modes. For all modes, setting the COMnx1:0 = 0 tells the Waveform Generator that no action on the OCnx Register is to be performed on the next compare match. For compare output actions in the non-PWM modes refer to Table 17-3 on page 155. For fast PWM mode refer to Table 17-4 on page 155, and for phase correct and phase and frequency correct PWM refer to Table 17-5 on page 155.

A change of the COMnx1:0 bits state will have effect at the first compare match after the bits are written. For non-PWM modes, the action can be forced to have immediate effect by using the FOCnx strobe bits.

17.9 Modes of Operation

The mode of operation, that is, the behavior of the Timer/Counter and the Output Compare pins, is defined by the combination of the *Waveform Generation mode* (WGMn3:0) and *Compare Output mode* (COMnx1:0) bits. The Compare Output mode bits do not affect the counting sequence, while the Waveform Generation mode bits do. The COMnx1:0 bits control whether the PWM output generated should be inverted or not (inverted or non-inverted PWM). For non-PWM modes the COMnx1:0 bits control whether the output should be set, cleared or toggle at a compare match. See “Compare Match Output Unit” on page 143.

Table 17-2. Waveform Generation Mode Bit Description[1]

Mode	WGMn3	WGMn2 (CTCn)	WGMn1 (PWMn1)	WGMn0 (PWMn0)	Timer/Counter Mode of Operation	TOP	Update of OCRnx at	TOVn Flag Set on
0	0	0	0	0	Normal	0xFFFF	Immediate	MAX
1	0	0	0	1	PWM, Phase Correct, 8-bit	0x00FF	TOP	BOTTOM
2	0	0	1	0	PWM, Phase Correct, 9-bit	0x01FF	TOP	BOTTOM
3	0	0	1	1	PWM, Phase Correct, 10-bit	0x03FF	TOP	BOTTOM
4	0	1	0	0	CTC	OCRnA	Immediate	MAX
5	0	1	0	1	Fast PWM, 8-bit	0x00FF	BOTTOM	TOP
6	0	1	1	0	Fast PWM, 9-bit	0x01FF	BOTTOM	TOP
7	0	1	1	1	Fast PWM, 10-bit	0x03FF	BOTTOM	TOP
8	1	0	0	0	PWM, Phase and Frequency Correct	ICRn	BOTTOM	BOTTOM
9	1	0	0	1	PWM,Phase and Frequency Correct	OCRnA	BOTTOM	BOTTOM
10	1	0	1	0	PWM, Phase Correct	ICRn	TOP	BOTTOM
11	1	0	1	1	PWM, Phase Correct	OCRnA	TOP	BOTTOM
12	1	1	0	0	CTC	ICRn	Immediate	MAX
13	1	1	0	1	(Reserved)	–	–	–
14	1	1	1	0	Fast PWM	ICRn	BOTTOM	TOP
15	1	1	1	1	Fast PWM	OCRnA	BOTTOM	TOP

Note: 1. The CTCn and PWMn1:0 bit definition names are obsolete. Use the WGMn2:0 definitions. However, the functionality and location of these bits are compatible with previous versions of the timer.

For detailed timing information refer to "Timer/Counter Timing Diagrams" on page 152.

17.9.1 Normal Mode

The simplest mode of operation is the *Normal mode* (WGMn3:0 = 0). In this mode the counting direction is always up (incrementing), and no counter clear is performed. The counter simply overruns when it passes its maximum 16-bit value (MAX = 0xFFFF) and then restarts from the BOTTOM (0x0000). In normal operation the *Timer/Counter Overflow Flag* (TOVn) will be set in the same timer clock cycle as the TCNTn becomes zero. The TOVn Flag in this case behaves like a 17th bit, except that it is only set, not cleared. However, combined with the timer overflow interrupt that automatically clears the TOVn Flag, the timer resolution can be increased by software. There are no special cases to consider in the Normal mode, a new counter value can be written anytime.

The Input Capture unit is easy to use in Normal mode. However, observe that the maximum interval between the external events must not exceed the resolution of the counter. If the interval between events are too long, the timer overflow interrupt or the prescaler must be used to extend the resolution for the capture unit.

The Output Compare units can be used to generate interrupts at some given time. Using the Output Compare to generate waveforms in Normal mode is not recommended, since this will occupy too much of the CPU time.

17.9.2 Clear Timer on Compare Match (CTC) Mode

In *Clear Timer on Compare* or CTC mode (WGMn3:0 = 4 or 12), the OCRnA or ICRn Register are used to manipulate the counter resolution. In CTC mode the counter is cleared to zero when the counter value (TCNTn) matches either the OCRnA (WGMn3:0 = 4) or the ICRn (WGMn3:0 = 12). The OCRnA or ICRn define the top value for the

counter, hence also its resolution. This mode allows greater control of the compare match output frequency. It also simplifies the operation of counting external events.

The timing diagram for the CTC mode is shown in Figure 17-6. The counter value (TCNTn) increases until a compare match occurs with either OCRnA or ICRn, and then counter (TCNTn) is cleared.

Figure 17-6. CTC Mode, Timing Diagram

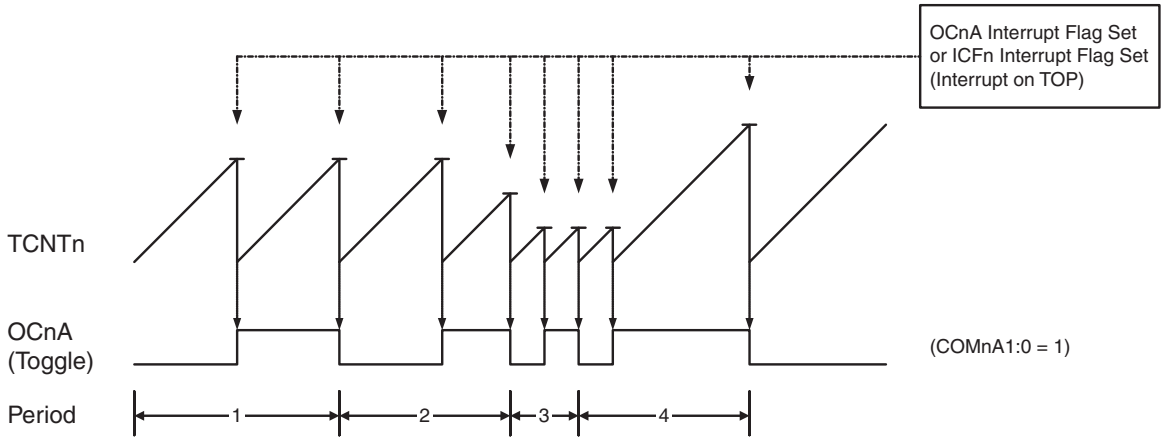

An interrupt can be generated at each time the counter value reaches the TOP value by either using the OCFnA or ICFn Flag according to the register used to define the TOP value. If the interrupt is enabled, the interrupt handler routine can be used for updating the TOP value. However, changing the TOP to a value close to BOTTOM when the counter is running with none or a low prescaler value must be done with care since the CTC mode does not have the double buffering feature. If the new value written to OCRnA or ICRn is lower than the current value of TCNTn, the counter will miss the compare match. The counter will then have to count to its maximum value (0xFFFF) and wrap around starting at 0x0000 before the compare match can occur. In many cases this feature is not desirable. An alternative will then be to use the fast PWM mode using OCRnA for defining TOP (WGMn3:0 = 15) since the OCRnA then will be double buffered.

For generating a waveform output in CTC mode, the OCnA output can be set to toggle its logical level on each compare match by setting the Compare Output mode bits to toggle mode (COMnA1:0 = 1). The OCnA value will not be visible on the port pin unless the data direction for the pin is set to output (DDR_OCnA = 1). The waveform generated will have a maximum frequency of $f_{OCnA} = f_{clk_I/O}/2$ when OCRnA is set to zero (0x0000). The waveform frequency is defined by the following equation:

$$f_{OCnA} = \frac{f_{clk_I/O}}{2 \cdot N \cdot (1 + OCRnA)}$$

The *N* variable represents the prescaler factor (1, 8, 64, 256, or 1024).

As for the Normal mode of operation, the TOVn Flag is set in the same timer clock cycle that the counter counts from MAX to 0x0000.

17.9.3 Fast PWM Mode

The *fast Pulse Width Modulation* or fast PWM mode (WGMn3:0 = 5, 6, 7, 14, or 15) provides a high frequency PWM waveform generation option. The fast PWM differs from the other PWM options by its single-slope operation. The counter counts from BOTTOM to TOP then restarts from BOTTOM. In non-inverting Compare Output mode, the Output Compare (OCnx) is cleared on the compare match between TCNTn and OCRnx, and set at BOTTOM. In inverting Compare Output mode output is set on compare match and cleared at BOTTOM. Due to the single-slope operation, the operating frequency of the fast PWM mode can be twice as high as the phase correct and phase and frequency correct PWM modes that use dual-slope operation. This high frequency makes the fast PWM

mode well suited for power regulation, rectification, and DAC applications. High frequency allows physically small sized external components (coils, capacitors), hence reduces total system cost.

The PWM resolution for fast PWM can be fixed to 8-bit, 9-bit, or 10-bit, or defined by either ICRn or OCRnA. The minimum resolution allowed is 2-bit (ICRn or OCRnA set to 0x0003), and the maximum resolution is 16-bit (ICRn or OCRnA set to MAX). The PWM resolution in bits can be calculated by using the following equation:

$$R_{FPWM} = \frac{\log(TOP+1)}{\log(2)}$$

In fast PWM mode the counter is incremented until the counter value matches either one of the fixed values 0x00FF, 0x01FF, or 0x03FF (WGMn3:0 = 5, 6, or 7), the value in ICRn (WGMn3:0 = 14), or the value in OCRnA (WGMn3:0 = 15). The counter is then cleared at the following timer clock cycle. The timing diagram for the fast PWM mode is shown in Figure 17-7 on page 147. The figure shows fast PWM mode when OCRnA or ICRn is used to define TOP. The TCNTn value is in the timing diagram shown as a histogram for illustrating the single-slope operation. The diagram includes non-inverted and inverted PWM outputs. The small horizontal line marks on the TCNTn slopes represent compare matches between OCRnx and TCNTn. The OCnx Interrupt Flag will be set when a compare match occurs.

Figure 17-7. Fast PWM Mode, Timing Diagram

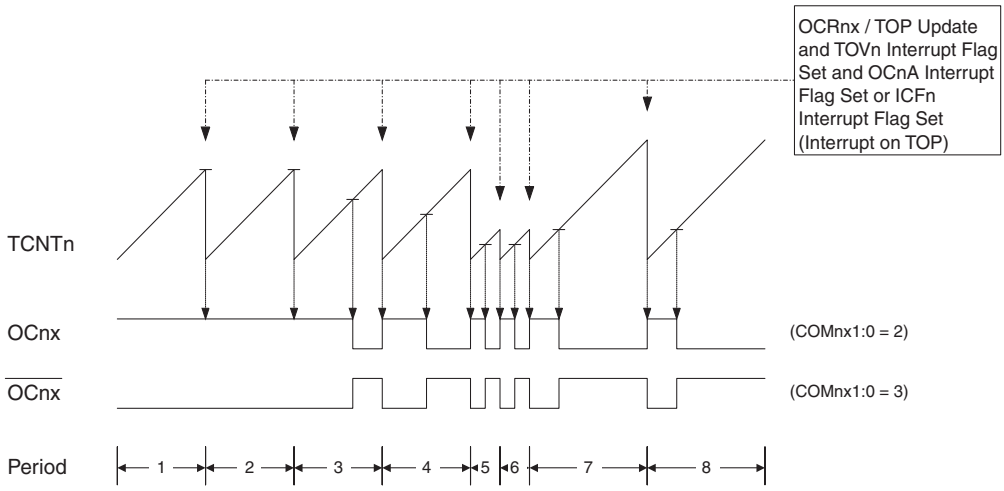

The Timer/Counter Overflow Flag (TOVn) is set each time the counter reaches TOP. In addition the OCnA or ICFn Flag is set at the same timer clock cycle as TOVn is set when either OCRnA or ICRn is used for defining the TOP value. If one of the interrupts are enabled, the interrupt handler routine can be used for updating the TOP and compare values.

When changing the TOP value the program must ensure that the new TOP value is higher or equal to the value of all of the Compare Registers. If the TOP value is lower than any of the Compare Registers, a compare match will never occur between the TCNTn and the OCRnx. Note that when using fixed TOP values the unused bits are masked to zero when any of the OCRnx Registers are written.

The procedure for updating ICRn differs from updating OCRnA when used for defining the TOP value. The ICRn Register is not double buffered. This means that if ICRn is changed to a low value when the counter is running with none or a low prescaler value, there is a risk that the new ICRn value written is lower than the current value of TCNTn. The result will then be that the counter will miss the compare match at the TOP value. The counter will then have to count to the MAX value (0xFFFF) and wrap around starting at 0x0000 before the compare match can occur. The OCRnA Register however, is double buffered. This feature allows the OCRnA I/O location to be written anytime. When the OCRnA I/O location is written the value written will be put into the OCRnA Buffer Register. The OCRnA Compare Register will then be updated with the value in the Buffer Register at the next timer clock cycle

the TCNTn matches TOP. The update is done at the same timer clock cycle as the TCNTn is cleared and the TOVn Flag is set.

Using the ICRn Register for defining TOP works well when using fixed TOP values. By using ICRn, the OCRnA Register is free to be used for generating a PWM output on OCnA. However, if the base PWM frequency is actively changed (by changing the TOP value), using the OCRnA as TOP is clearly a better choice due to its double buffer feature.

In fast PWM mode, the compare units allow generation of PWM waveforms on the OCnx pins. Setting the COMnx1:0 bits to two will produce a non-inverted PWM and an inverted PWM output can be generated by setting the COMnx1:0 to three (see Table on page 155). The actual OCnx value will only be visible on the port pin if the data direction for the port pin is set as output (DDR_OCnx). The PWM waveform is generated by setting (or clearing) the OCnx Register at the compare match between OCRnx and TCNTn, and clearing (or setting) the OCnx Register at the timer clock cycle the counter is cleared (changes from TOP to BOTTOM).

The PWM frequency for the output can be calculated by the following equation:

$$f_{OCnxPWM} = \frac{f_{\text{clk_I/O}}}{N \cdot (1 + TOP)}$$

The N variable represents the prescaler divider (1, 8, 64, 256, or 1024).

The extreme values for the OCRnx Register represents special cases when generating a PWM waveform output in the fast PWM mode. If the OCRnx is set equal to BOTTOM (0x0000) the output will be a narrow spike for each TOP+1 timer clock cycle. Setting the OCRnx equal to TOP will result in a constant high or low output (depending on the polarity of the output set by the COMnx1:0 bits).

A frequency (with 50% duty cycle) waveform output in fast PWM mode can be achieved by setting OCnA to toggle its logical level on each compare match (COMnA1:0 = 1). This applies only if OCR1A is used to define the TOP value (WGM13:0 = 15). The waveform generated will have a maximum frequency of $f_{OCnA} = f_{clk_I/O}/2$ when OCRnA is set to zero (0x0000). This feature is similar to the OCnA toggle in CTC mode, except the double buffer feature of the Output Compare unit is enabled in the fast PWM mode.

17.9.4 Phase Correct PWM Mode

The *phase correct Pulse Width Modulation* or phase correct PWM mode (WGMn3:0 = 1, 2, 3, 10, or 11) provides a high resolution phase correct PWM waveform generation option. The phase correct PWM mode is, like the phase and frequency correct PWM mode, based on a dual-slope operation. The counter counts repeatedly from BOTTOM (0x0000) to TOP and then from TOP to BOTTOM. In non-inverting Compare Output mode, the Output Compare (OCnx) is cleared on the compare match between TCNTn and OCRnx while upcounting, and set on the compare match while downcounting. In inverting Output Compare mode, the operation is inverted. The dual-slope operation has lower maximum operation frequency than single slope operation. However, due to the symmetric feature of the dual-slope PWM modes, these modes are preferred for motor control applications.

The PWM resolution for the phase correct PWM mode can be fixed to 8-bit, 9-bit, or 10-bit, or defined by either ICRn or OCRnA. The minimum resolution allowed is 2-bit (ICRn or OCRnA set to 0x0003), and the maximum resolution is 16-bit (ICRn or OCRnA set to MAX). The PWM resolution in bits can be calculated by using the following equation:

$$R_{PCPWM} = \frac{\log(TOP + 1)}{\log(2)}$$

In phase correct PWM mode the counter is incremented until the counter value matches either one of the fixed values 0x00FF, 0x01FF, or 0x03FF (WGMn3:0 = 1, 2, or 3), the value in ICRn (WGMn3:0 = 10), or the value in OCRnA (WGMn3:0 = 11). The counter has then reached the TOP and changes the count direction. The TCNTn value will be equal to TOP for one timer clock cycle. The timing diagram for the phase correct PWM mode is shown

on Figure 17-8 on page 149. The figure shows phase correct PWM mode when OCRnA or ICRn is used to define TOP. The TCNTn value is in the timing diagram shown as a histogram for illustrating the dual-slope operation. The diagram includes non-inverted and inverted PWM outputs. The small horizontal line marks on the TCNTn slopes represent compare matches between OCRnx and TCNTn. The OCnx Interrupt Flag will be set when a compare match occurs.

Figure 17-8. Phase Correct PWM Mode, Timing Diagram

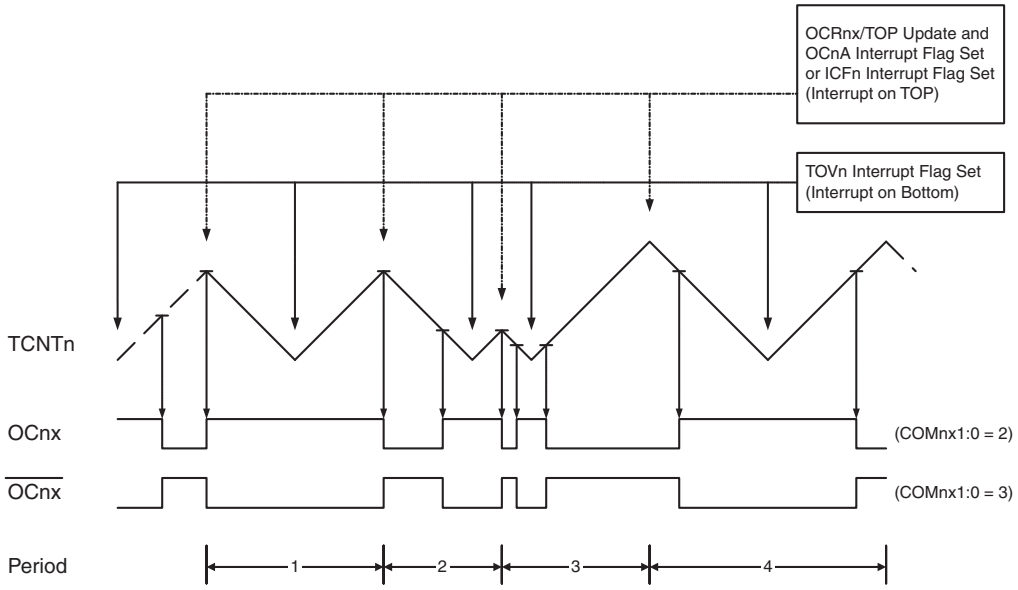

The Timer/Counter Overflow Flag (TOVn) is set each time the counter reaches BOTTOM. When either OCRnA or ICRn is used for defining the TOP value, the OCnA or ICFn Flag is set accordingly at the same timer clock cycle as the OCRnx Registers are updated with the double buffer value (at TOP). The Interrupt Flags can be used to generate an interrupt each time the counter reaches the TOP or BOTTOM value.

When changing the TOP value the program must ensure that the new TOP value is higher or equal to the value of all of the Compare Registers. If the TOP value is lower than any of the Compare Registers, a compare match will never occur between the TCNTn and the OCRnx. Note that when using fixed TOP values, the unused bits are masked to zero when any of the OCRnx Registers are written. As the third period shown in Figure 17-8 illustrates, changing the TOP actively while the Timer/Counter is running in the phase correct mode can result in an unsymmetrical output. The reason for this can be found in the time of update of the OCRnx Register. Since the OCRnx update occurs at TOP, the PWM period starts and ends at TOP. This implies that the length of the falling slope is determined by the previous TOP value, while the length of the rising slope is determined by the new TOP value. When these two values differ the two slopes of the period will differ in length. The difference in length gives the unsymmetrical result on the output.

It is recommended to use the phase and frequency correct mode instead of the phase correct mode when changing the TOP value while the Timer/Counter is running. When using a static TOP value there are practically no differences between the two modes of operation.

In phase correct PWM mode, the compare units allow generation of PWM waveforms on the OCnx pins. Setting the COMnx1:0 bits to two will produce a non-inverted PWM and an inverted PWM output can be generated by setting the COMnx1:0 to three (see Table 17-5 on page 155). The actual OCnx value will only be visible on the port pin if the data direction for the port pin is set as output (DDR_OCnx). The PWM waveform is generated by setting (or clearing) the OCnx Register at the compare match between OCRnx and TCNTn when the counter increments, and clearing (or setting) the OCnx Register at compare match between OCRnx and TCNTn when the counter dec-

rements. The PWM frequency for the output when using phase correct PWM can be calculated by the following equation:

$$f_{OCnxPCPWM} = \frac{f_{\text{clk_I/O}}}{2 \cdot N \cdot TOP}$$

The N variable represents the prescaler divider (1, 8, 64, 256, or 1024).

The extreme values for the OCRnx Register represent special cases when generating a PWM waveform output in the phase correct PWM mode. If the OCRnx is set equal to BOTTOM the output will be continuously low and if set equal to TOP the output will be continuously high for non-inverted PWM mode. For inverted PWM the output will have the opposite logic values. If OCR1A is used to define the TOP value (WGM13:0 = 11) and COM1A1:0 = 1, the OC1A output will toggle with a 50% duty cycle.

17.9.5 Phase and Frequency Correct PWM Mode

The *phase and frequency correct Pulse Width Modulation,* or phase and frequency correct PWM mode (WGMn3:0 = 8 or 9) provides a high resolution phase and frequency correct PWM waveform generation option. The phase and frequency correct PWM mode is, like the phase correct PWM mode, based on a dual-slope operation. The counter counts repeatedly from BOTTOM (0x0000) to TOP and then from TOP to BOTTOM. In non-inverting Compare Output mode, the Output Compare (OCnx) is cleared on the compare match between TCNTn and OCRnx while upcounting, and set on the compare match while downcounting. In inverting Compare Output mode, the operation is inverted. The dual-slope operation gives a lower maximum operation frequency compared to the single-slope operation. However, due to the symmetric feature of the dual-slope PWM modes, these modes are preferred for motor control applications.

The main difference between the phase correct, and the phase and frequency correct PWM mode is the time the OCRnx Register is updated by the OCRnx Buffer Register, see Figure 17-8 on page 149 and Figure 17-9 on page 151.

The PWM resolution for the phase and frequency correct PWM mode can be defined by either ICRn or OCRnA. The minimum resolution allowed is 2-bit (ICRn or OCRnA set to 0x0003), and the maximum resolution is 16-bit (ICRn or OCRnA set to MAX). The PWM resolution in bits can be calculated using the following equation:

$$R_{PFCPWM} = \frac{\log(TOP + 1)}{\log(2)}$$

In phase and frequency correct PWM mode the counter is incremented until the counter value matches either the value in ICRn (WGMn3:0 = 8), or the value in OCRnA (WGMn3:0 = 9). The counter has then reached the TOP and changes the count direction. The TCNTn value will be equal to TOP for one timer clock cycle. The timing diagram for the phase correct and frequency correct PWM mode is shown on Figure 17-9 on page 151. The figure shows phase and frequency correct PWM mode when OCRnA or ICRn is used to define TOP. The TCNTn value is in the timing diagram shown as a histogram for illustrating the dual-slope operation. The diagram includes non-inverted and inverted PWM outputs. The small horizontal line marks on the TCNTn slopes represent compare matches between OCRnx and TCNTn. The OCnx Interrupt Flag will be set when a compare match occurs.

Figure 17-9. Phase and Frequency Correct PWM Mode, Timing Diagram

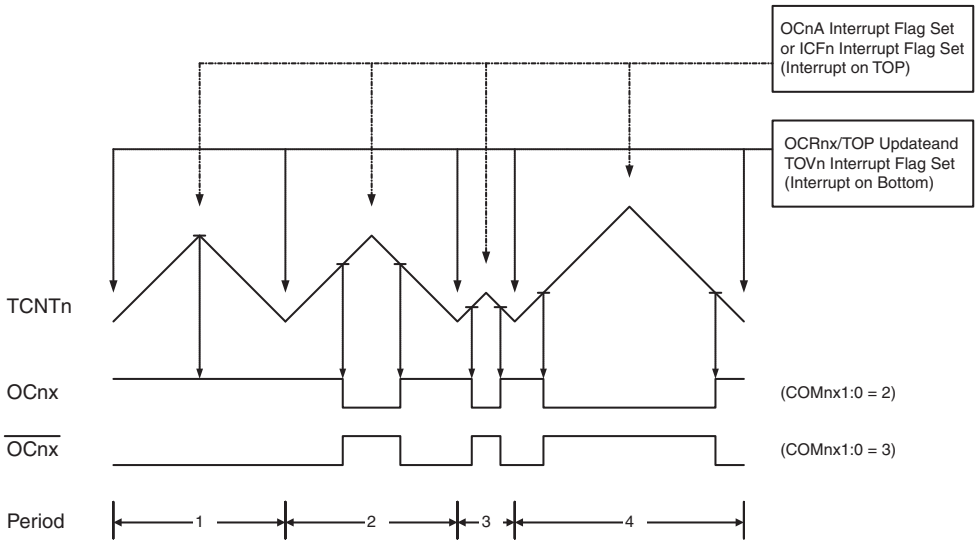

The Timer/Counter Overflow Flag (TOVn) is set at the same timer clock cycle as the OCRnx Registers are updated with the double buffer value (at BOTTOM). When either OCRnA or ICRn is used for defining the TOP value, the OCnA or ICFn Flag set when TCNTn has reached TOP. The Interrupt Flags can then be used to generate an interrupt each time the counter reaches the TOP or BOTTOM value.

When changing the TOP value the program must ensure that the new TOP value is higher or equal to the value of all of the Compare Registers. If the TOP value is lower than any of the Compare Registers, a compare match will never occur between the TCNTn and the OCRnx.

As Figure 17-9 shows the output generated is, in contrast to the phase correct mode, symmetrical in all periods. Since the OCRnx Registers are updated at BOTTOM, the length of the rising and the falling slopes will always be equal. This gives symmetrical output pulses and is therefore frequency correct.

Using the ICRn Register for defining TOP works well when using fixed TOP values. By using ICRn, the OCRnA Register is free to be used for generating a PWM output on OCnA. However, if the base PWM frequency is actively changed by changing the TOP value, using the OCRnA as TOP is clearly a better choice due to its double buffer feature.

In phase and frequency correct PWM mode, the compare units allow generation of PWM waveforms on the OCnx pins. Setting the COMnx1:0 bits to two will produce a non-inverted PWM and an inverted PWM output can be generated by setting the COMnx1:0 to three (see Table 17-5 on page 155). The actual OCnx value will only be visible on the port pin if the data direction for the port pin is set as output (DDR_OCnx). The PWM waveform is generated by setting (or clearing) the OCnx Register at the compare match between OCRnx and TCNTn when the counter increments, and clearing (or setting) the OCnx Register at compare match between OCRnx and TCNTn when the counter decrements. The PWM frequency for the output when using phase and frequency correct PWM can be calculated by the following equation:

$$f_{OCnxPFCPWM} = \frac{f_{\text{clk_I/O}}}{2 \cdot N \cdot TOP}$$

The N variable represents the prescaler divider (1, 8, 64, 256, or 1024).

The extreme values for the OCRnx Register represents special cases when generating a PWM waveform output in the phase correct PWM mode. If the OCRnx is set equal to BOTTOM the output will be continuously low and if set equal to TOP the output will be set to high for non-inverted PWM mode. For inverted PWM the output will have the opposite logic values. If OCR1A is used to define the TOP value (WGM13:0 = 9) and COM1A1:0 = 1, the OC1A output will toggle with a 50% duty cycle.

17.10 Timer/Counter Timing Diagrams

The Timer/Counter is a synchronous design and the timer clock (clk_{Tn}) is therefore shown as a clock enable signal in the following figures. The figures include information on when Interrupt Flags are set, and when the OCRnx Register is updated with the OCRnx buffer value (only for modes utilizing double buffering). Figure 17-10 shows a timing diagram for the setting of OCFnx.

Figure 17-10. Timer/Counter Timing Diagram, Setting of OCFnx, no Prescaling

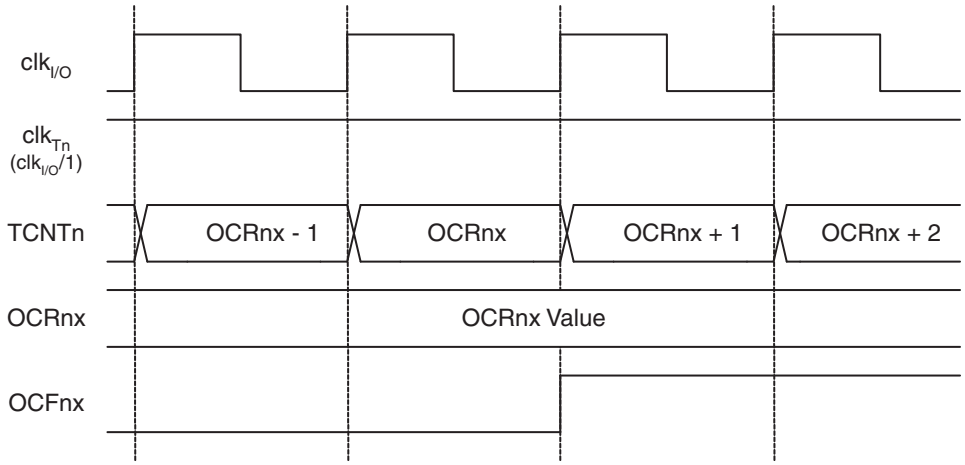

Figure 17-11 shows the same timing data, but with the prescaler enabled.

Figure 17-11. Timer/Counter Timing Diagram, Setting of OCFnx, with Prescaler ($f_{clk_I/O}/8$)

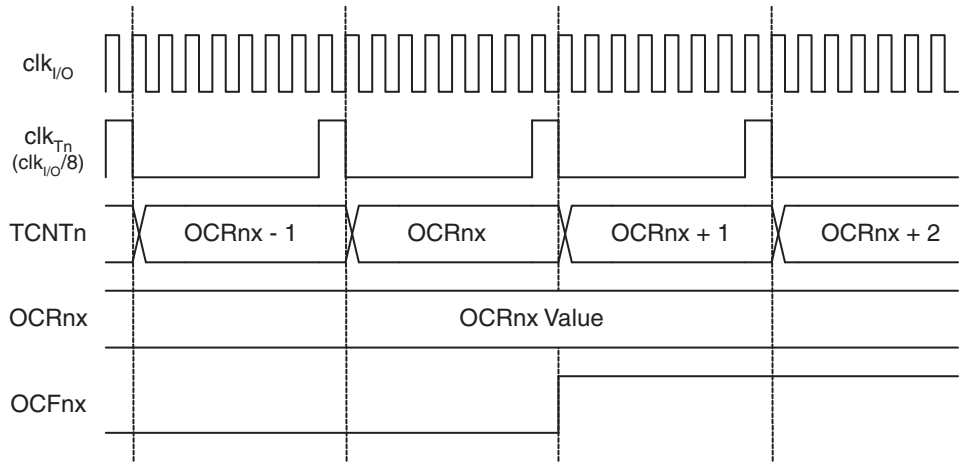

Figure 17-12 shows the count sequence close to TOP in various modes. When using phase and frequency correct PWM mode the OCRnx Register is updated at BOTTOM. The timing diagrams will be the same, but TOP should be replaced by BOTTOM, TOP-1 by BOTTOM+1 and so on. The same renaming applies for modes that set the TOVn Flag at BOTTOM.

Figure 17-12. Timer/Counter Timing Diagram, no Prescaling

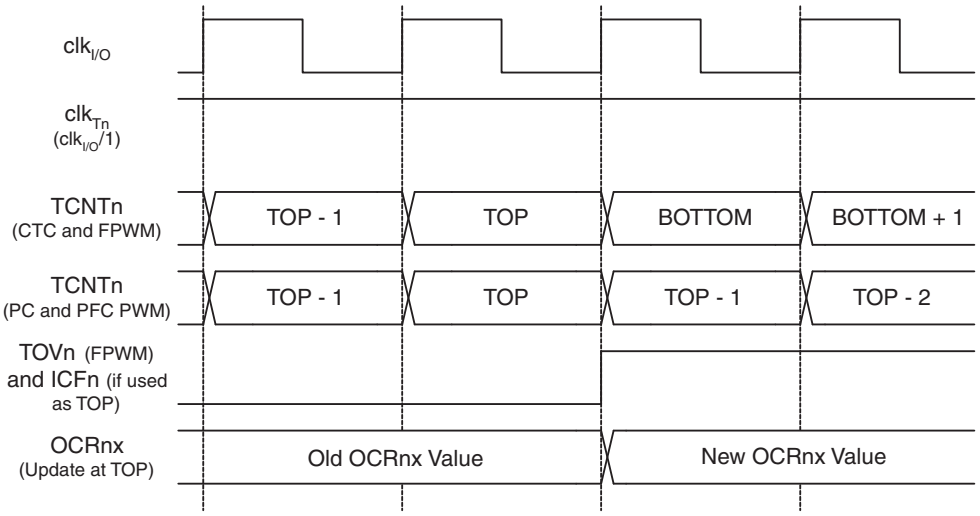

Figure 17-13 shows the same timing data, but with the prescaler enabled.

Figure 17-13. Timer/Counter Timing Diagram, with Prescaler ($f_{clk_I/O}/8$)

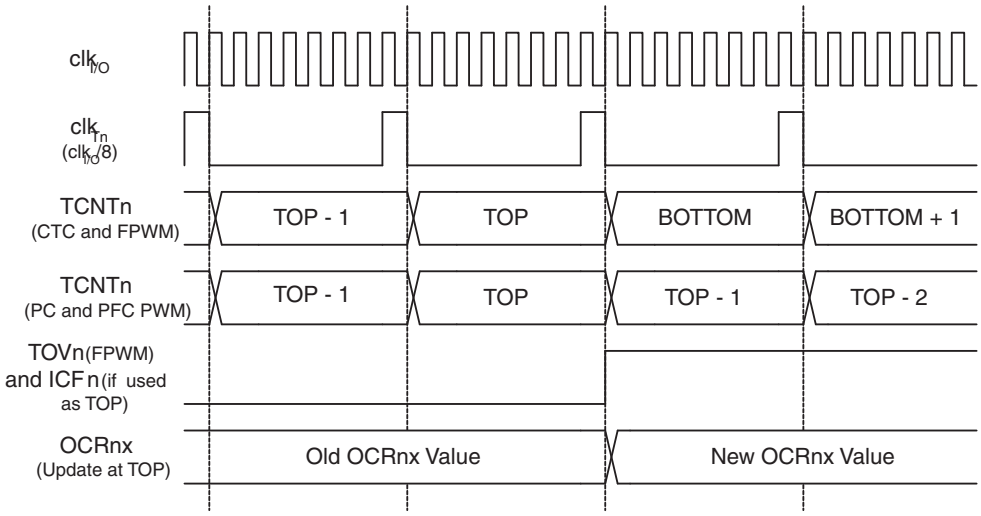

17.11 Register Description

17.11.1 TCCR1A – Timer/Counter 1 Control Register A

Bit	7	6	5	4	3	2	1	0	
(0x80)	COM1A1	COM1A0	COM1B1	COM1B0	COM1C1	COM1C0	WGM11	WGM10	TCCR1A
Read/Write	R/W	R/W	R/W	R/W	R/W	R/W	R/W	R/W	
Initial Value	0	0	0	0	0	0	0	0	

17.11.2 TCCR3A – Timer/Counter 3 Control Register A

Bit	7	6	5	4	3	2	1	0	
(0x90)	COM3A1	COM3A0	COM3B1	COM3B0	COM3C1	COM3C0	WGM31	WGM30	TCCR3A
Read/Write	R/W	R/W	R/W	R/W	R/W	R/W	R/W	R/W	
Initial Value	0	0	0	0	0	0	0	0	

17.11.3 TCCR4A – Timer/Counter 4 Control Register A

Bit	7	6	5	4	3	2	1	0	
(0xA0)	COM4A1	COM4A0	COM4B1	COM4B0	COM4C1	COM4C0	WGM41	WGM40	TCCR4A
Read/Write	R/W	R/W	R/W	R/W	R/W	R/W	R/W	R/W	
Initial Value	0	0	0	0	0	0	0	0	

17.11.4 TCCR5A – Timer/Counter 5 Control Register A

Bit	7	6	5	4	3	2	1	0	
(0x120)	COM5A1	COM5A0	COM5B1	COM5B0	COM5C1	COM5C0	WGM51	WGM50	TCCR5A
Read/Write	R/W	R/W	R/W	R/W	R/W	R/W	R/W	R/W	
Initial Value	0	0	0	0	0	0	0	0	

- **Bit 7:6 – COMnA1:0: Compare Output Mode for Channel A**
- **Bit 5:4 – COMnB1:0: Compare Output Mode for Channel B**
- **Bit 3:2 – COMnC1:0: Compare Output Mode for Channel C**

The COMnA1:0, COMnB1:0, and COMnC1:0 control the output compare pins (OCnA, OCnB, and OCnC respectively) behavior. If one or both of the COMnA1:0 bits are written to one, the OCnA output overrides the normal port functionality of the I/O pin it is connected to. If one or both of the COMnB1:0 bits are written to one, the OCnB output overrides the normal port functionality of the I/O pin it is connected to. If one or both of the COMnC1:0 bits are written to one, the OCnC output overrides the normal port functionality of the I/O pin it is connected to. However, note that the Data Direction Register (DDR) bit corresponding to the OCnA, OCnB or OCnC pin must be set in order to enable the output driver.

When the OCnA, OCnB or OCnC is connected to the pin, the function of the COMnx1:0 bits is dependent of the WGMn3:0 bits setting. Table 17-3 on page 155 shows the COMnx1:0 bit functionality when the WGMn3:0 bits are set to a normal or a CTC mode (non-PWM).

- **Bit 1:0 – WGMn1:0: Waveform Generation Mode**

Combined with the WGMn3:2 bits found in the TCCRnB Register, these bits control the counting sequence of the counter, the source for maximum (TOP) counter value, and what type of waveform generation to be used, see Table 17-2 on page 145. Modes of operation supported by the Timer/Counter unit are: Normal mode (counter), Clear Timer on Compare match (CTC) mode, and three types of Pulse Width Modulation (PWM) modes. For more information on the different modes, see "Modes of Operation" on page 144.

Table 17-3. Compare Output Mode, non-PWM

COMnA1 COMnB1 COMnC1	COMnA0 COMnB0 COMnC0	Description
0	0	Normal port operation, OCnA/OCnB/OCnC disconnected
0	1	Toggle OCnA/OCnB/OCnC on compare match
1	0	Clear OCnA/OCnB/OCnC on compare match (set output to low level)
1	1	Set OCnA/OCnB/OCnC on compare match (set output to high level)

Table 17-4 shows the COMnx1:0 bit functionality when the WGMn3:0 bits are set to the fast PWM mode.

Table 17-4. Compare Output Mode, Fast PWM

COMnA1 COMnB1 COMnC1	COMnA0 COMnB0 COMnC0	Description
0	0	Normal port operation, OCnA/OCnB/OCnC disconnected
0	1	WGM13:0 = 14 or 15: Toggle OC1A on Compare Match, OC1B and OC1C disconnected (normal port operation). For all other WGM1 settings, normal port operation, OC1A/OC1B/OC1C disconnected
1	0	Clear OCnA/OCnB/OCnC on compare match, set OCnA/OCnB/OCnC at BOTTOM (non-inverting mode)
1	1	Set OCnA/OCnB/OCnC on compare match, clear OCnA/OCnB/OCnC at BOTTOM (inverting mode)

Note: A special case occurs when OCRnA/OCRnB/OCRnC equals TOP and COMnA1/COMnB1/COMnC1 is set. In this case the compare match is ignored, but the set or clear is done at BOTTOM. See "Fast PWM Mode" on page 146. for more details.

Table 17-5 shows the COMnx1:0 bit functionality when the WGMn3:0 bits are set to the phase correct and frequency correct PWM mode.

Table 17-5. Compare Output Mode, Phase Correct and Phase and Frequency Correct PWM

COMnA1 COMnB1 COMnC1	COMnA0 COMnB0 COMnC0	Description
0	0	Normal port operation, OCnA/OCnB/OCnC disconnected
0	1	WGM13:0 =9 or 11: Toggle OC1A on Compare Match, OC1B and OC1C disconnected (normal port operation). For all other WGM1 settings, normal port operation, OC1A/OC1B/OC1C disconnected
1	0	Clear OCnA/OCnB/OCnC on compare match when up-counting Set OCnA/OCnB/OCnC on compare match when downcounting
1	1	Set OCnA/OCnB/OCnC on compare match when up-counting Clear OCnA/OCnB/OCnC on compare match when downcounting

Note: A special case occurs when OCRnA/OCRnB/OCRnC equals TOP and COMnA1/COMnB1//COMnC1 is set. See "Phase Correct PWM Mode" on page 148. for more details.

17.11.5 TCCR1B – Timer/Counter 1 Control Register B

Bit	7	6	5	4	3	2	1	0	
(0x81)	ICNC1	ICES1	–	WGM13	WGM12	CS12	CS11	CS10	TCCR1B
Read/Write	R/W	R/W	R	R/W	R/W	R/W	R/W	R/W	
Initial Value	0	0	0	0	0	0	0	0	

17.11.6 TCCR3B – Timer/Counter 3 Control Register B

Bit	7	6	5	4	3	2	1	0	
(0x91)	ICNC3	ICES3	–	WGM33	WGM32	CS32	CS31	CS30	TCCR3B
Read/Write	R/W	R/W	R	R/W	R/W	R/W	R/W	R/W	
Initial Value	0	0	0	0	0	0	0	0	

17.11.7 TCCR4B – Timer/Counter 4 Control Register B

Bit	7	6	5	4	3	2	1	0	
(0xA1)	ICNC4	ICES4	–	WGM43	WGM42	CS42	CS41	CS40	TCCR4B
Read/Write	R/W	R/W	R	R/W	R/W	R/W	R/W	R/W	
Initial Value	0	0	0	0	0	0	0	0	

17.11.8 TCCR5B – Timer/Counter 5 Control Register B

Bit	7	6	5	4	3	2	1	0	
(0x121)	ICNC5	ICES5	–	WGM53	WGM52	CS52	CS51	CS50	TCCR5B
Read/Write	R/W	R/W	R	R/W	R/W	R/W	R/W	R/W	
Initial Value	0	0	0	0	0	0	0	0	

- **Bit 7 – ICNCn: Input Capture Noise Canceler**

Setting this bit (to one) activates the Input Capture Noise Canceler. When the Noise Canceler is activated, the input from the Input Capture Pin (ICPn) is filtered. The filter function requires four successive equal valued samples of the ICPn pin for changing its output. The input capture is therefore delayed by four Oscillator cycles when the noise canceler is enabled.

- **Bit 6 – ICESn: Input Capture Edge Select**

This bit selects which edge on the Input Capture Pin (ICPn) that is used to trigger a capture event. When the ICESn bit is written to zero, a falling (negative) edge is used as trigger, and when the ICESn bit is written to one, a rising (positive) edge will trigger the capture.

When a capture is triggered according to the ICESn setting, the counter value is copied into the Input Capture Register (ICRn). The event will also set the Input Capture Flag (ICFn), and this can be used to cause an Input Capture Interrupt, if this interrupt is enabled.

When the ICRn is used as TOP value (see description of the WGMn3:0 bits located in the TCCRnA and the TCCRnB Register), the ICPn is disconnected and consequently the input capture function is disabled.

- **Bit 5 – Reserved Bit**

This bit is reserved for future use. For ensuring compatibility with future devices, this bit must be written to zero when TCCRnB is written.

- **Bit 4:3 – WGMn3:2: Waveform Generation Mode**

See TCCRnA Register description.

- **Bit 2:0 – CSn2:0: Clock Select**

The three clock select bits select the clock source to be used by the Timer/Counter, see Figure 17-10 and Figure 17-11 on page 152.

Table 17-6. Clock Select Bit Description

CSn2	CSn1	CSn0	Description
0	0	0	No clock source. (Timer/Counter stopped)
0	0	1	$clk_{I/O}/1$ (No prescaling
0	1	0	$clk_{I/O}/8$ (From prescaler)
0	1	1	$clk_{I/O}/64$ (From prescaler)
1	0	0	$clk_{I/O}/256$ (From prescaler)
1	0	1	$clk_{I/O}/1024$ (From prescaler)
1	1	0	External clock source on Tn pin. Clock on falling edge
1	1	1	External clock source on Tn pin. Clock on rising edge

If external pin modes are used for the Timer/Countern, transitions on the Tn pin will clock the counter even if the pin is configured as an output. This feature allows software control of the counting.

17.11.9 TCCR1C – Timer/Counter 1 Control Register C

Bit	7	6	5	4	3	2	1	0	
(0x82)	FOC1A	FOC1B	FOC1C	–	–	–	–	–	TCCR1C
Read/Write	W	W	W	R	R	R	R	R	
Initial Value	0	0	0	0	0	0	0	0	

17.11.10 TCCR3C – Timer/Counter 3 Control Register C

Bit	7	6	5	4	3	2	1	0	
(0x92)	FOC3A	FOC3B	FOC3C	–	–	–	–	–	TCCR3C
Read/Write	W	W	W	R	R	R	R	R	
Initial Value	0	0	0	0	0	0	0	0	

17.11.11 TCCR4C – Timer/Counter 4 Control Register C

Bit	7	6	5	4	3	2	1	0	
(0xA2)	FOC4A	FOC4B	FOC4C	–	–	–	–	–	TCCR4C
Read/Write	W	W	W	R	R	R	R	R	
Initial Value	0	0	0	0	0	0	0	0	

17.11.12 TCCR5C – Timer/Counter 5 Control Register C

Bit	7	6	5	4	3	2	1	0	
(0x122)	FOC5A	FOC5B	FOC3C	–	–	–	–	–	TCCR5C
Read/Write	W	W	W	R	R	R	R	R	
Initial Value	0	0	0	0	0	0	0	0	

- **Bit 7 – FOCnA: Force Output Compare for Channel A**
- **Bit 6 – FOCnB: Force Output Compare for Channel B**
- **Bit 5 – FOCnC: Force Output Compare for Channel C**

The FOCnA/FOCnB/FOCnC bits are only active when the WGMn3:0 bits specifies a non-PWM mode. When writing a logical one to the FOCnA/FOCnB/FOCnC bit, an immediate compare match is forced on the waveform generation unit. The OCnA/OCnB/OCnC output is changed according to its COMnx1:0 bits setting. Note that the

FOCnA/FOCnB/FOCnC bits are implemented as strobes. Therefore it is the value present in the COMnx1:0 bits that determine the effect of the forced compare.

A FOCnA/FOCnB/FOCnC strobe will not generate any interrupt nor will it clear the timer in Clear Timer on Compare Match (CTC) mode using OCRnA as TOP.

The FOCnA/FOCnB/FOCnB bits are always read as zero.

- **Bit 4:0 – Reserved Bits**

These bits are reserved for future use. For ensuring compatibility with future devices, these bits must be written to zero when TCCRnC is written.

17.11.13 TCNT1H and TCNT1L – Timer/Counter 1

Bit	7	6	5	4	3	2	1	0	
(0x85)	TCNT1[15:8]								TCNT1H
(0x84)	TCNT1[7:0]								TCNT1L
Read/Write	R/W	R/W	R/W	R/W	R/W	R/W	R/W	R/W	
Initial Value	0	0	0	0	0	0	0	0	

17.11.14 TCNT3H and TCNT3L – Timer/Counter 3

Bit	7	6	5	4	3	2	1	0	
(0x95)	TCNT3[15:8]								TCNT3H
(0x94)	TCNT3[7:0]								TCNT3L
Read/Write	R/W	R/W	R/W	R/W	R/W	R/W	R/W	R/W	
Initial Value	0	0	0	0	0	0	0	0	

17.11.15 TCNT4H and TCNT4L –Timer/Counter 4

Bit	7	6	5	4	3	2	1	0	
(0xA5)	TCNT4[15:8]								TCNT4H
(0xA4)	TCNT4[7:0]								TCNT4L
Read/Write	R/W	R/W	R/W	R/W	R/W	R/W	R/W	R/W	
Initial Value	0	0	0	0	0	0	0	0	

17.11.16 TCNT5H and TCNT5L –Timer/Counter 5

Bit	7	6	5	4	3	2	1	0	
(0x125)	TCNT5[15:8]								TCNT5H
(0x124)	TCNT5[7:0]								TCNT5L
Read/Write	R/W	R/W	R/W	R/W	R/W	R/W	R/W	R/W	
Initial Value	0	0	0	0	0	0	0	0	

The two *Timer/Counter* I/O locations (TCNTnH and TCNTnL, combined TCNTn) give direct access, both for read and for write operations, to the Timer/Counter unit 16-bit counter. To ensure that both the high and low bytes are read and written simultaneously when the CPU accesses these registers, the access is performed using an 8-bit temporary High Byte Register (TEMP). This temporary register is shared by all the other 16-bit registers. See “Accessing 16-bit Registers” on page 135.

Modifying the counter (TCNTn) while the counter is running introduces a risk of missing a compare match between TCNTn and one of the OCRnx Registers.

Writing to the TCNTn Register blocks (removes) the compare match on the following timer clock for all compare units.

17.11.17 OCR1AH and OCR1AL – Output Compare Register 1 A

Bit	7	6	5	4	3	2	1	0	
(0x89)	OCR1A[15:8]								OCR1AH
(0x88)	OCR1A[7:0]								OCR1AL
Read/Write	R/W	R/W	R/W	R/W	R/W	R/W	R/W	R/W	
Initial Value	0	0	0	0	0	0	0	0	

17.11.18 OCR1BH and OCR1BL – Output Compare Register 1 B

Bit	7	6	5	4	3	2	1	0	
(0x8B)	OCR1B[15:8]								OCR1BH
(0x8A)	OCR1B[7:0]								OCR1BL
Read/Write	R/W	R/W	R/W	R/W	R/W	R/W	R/W	R/W	
Initial Value	0	0	0	0	0	0	0	0	

17.11.19 OCR1CH and OCR1CL – Output Compare Register 1 C

Bit	7	6	5	4	3	2	1	0	
(0x8D)	OCR1C[15:8]								OCR1CH
(0x8C)	OCR1C[7:0]								OCR1CL
Read/Write	R/W	R/W	R/W	R/W	R/W	R/W	R/W	R/W	
Initial Value	0	0	0	0	0	0	0	0	

17.11.20 OCR3AH and OCR3AL – Output Compare Register 3 A

Bit	7	6	5	4	3	2	1	0	
(0x99)	OCR3A[15:8]								OCR3AH
(0x98)	OCR3A[7:0]								OCR3AL
Read/Write	R/W	R/W	R/W	R/W	R/W	R/W	R/W	R/W	
Initial Value	0	0	0	0	0	0	0	0	

17.11.21 OCR3BH and OCR3BL – Output Compare Register 3 B

Bit	7	6	5	4	3	2	1	0	
(0x9B)	OCR3B[15:8]								OCR3BH
(0x9A)	OCR3B[7:0]								OCR3BL
Read/Write	R/W	R/W	R/W	R/W	R/W	R/W	R/W	R/W	
Initial Value	0	0	0	0	0	0	0	0	

17.11.22 OCR3CH and OCR3CL – Output Compare Register 3 C

Bit	7	6	5	4	3	2	1	0	
(0x9D)	OCR3C[15:8]								OCR3CH
(0x9C)	OCR3C[7:0]								OCR3CL
Read/Write	R/W	R/W	R/W	R/W	R/W	R/W	R/W	R/W	
Initial Value	0	0	0	0	0	0	0	0	

17.11.23 OCR4AH and OCR4AL – Output Compare Register 4 A

Bit	7	6	5	4	3	2	1	0	
(0xA9)	OCR4A[15:8]								OCR4AH
(0xA8)	OCR4A[7:0]								OCR4AL
Read/Write	R/W	R/W	R/W	R/W	R/W	R/W	R/W	R/W	
Initial Value	0	0	0	0	0	0	0	0	

17.11.24 OCR4BH and OCR4BL – Output Compare Register 4 B

Bit	7	6	5	4	3	2	1	0	
(0xAA)	OCR4B[15:8]								OCR4BH
(0xAB)	OCR4B[7:0]								OCR4BL
Read/Write	R/W	R/W	R/W	R/W	R/W	R/W	R/W	R/W	
Initial Value	0	0	0	0	0	0	0	0	

17.11.25 OCR4CH and OCR4CL –Output Compare Register 4 C

Bit	7	6	5	4	3	2	1	0	
(0xAD)	OCR4C[15:8]								OCR4CH
(0xAC)	OCR4C[7:0]								OCR4CL
Read/Write	R/W	R/W	R/W	R/W	R/W	R/W	R/W	R/W	
Initial Value	0	0	0	0	0	0	0	0	

17.11.26 OCR5AH and OCR5AL – Output Compare Register 5 A

Bit	7	6	5	4	3	2	1	0	
(0x129)	OCR5A[15:8]								OCR5AH
(0x128)	OCR5A[7:0]								OCR5AL
Read/Write	R/W	R/W	R/W	R/W	R/W	R/W	R/W	R/W	
Initial Value	0	0	0	0	0	0	0	0	

17.11.27 OCR5BH and OCR5BL – Output Compare Register 5 B

Bit	7	6	5	4	3	2	1	0	
(0x12B)	OCR5B[15:8]								OCR5BH
(0x12A)	OCR5B[7:0]								OCR5BL
Read/Write	R/W	R/W	R/W	R/W	R/W	R/W	R/W	R/W	
Initial Value	0	0	0	0	0	0	0	0	

17.11.28 OCR5CH and OCR5CL –Output Compare Register 5 C

Bit	7	6	5	4	3	2	1	0	
(0x12D)	OCR5C[15:8]								OCR5CH
(0x12C)	OCR5C[7:0]								OCR5CL
Read/Write	R/W	R/W	R/W	R/W	R/W	R/W	R/W	R/W	
Initial Value	0	0	0	0	0	0	0	0	

The Output Compare Registers contain a 16-bit value that is continuously compared with the counter value (TCNTn). A match can be used to generate an Output Compare interrupt, or to generate a waveform output on the OCnx pin.

The Output Compare Registers are 16-bit in size. To ensure that both the high and low bytes are written simultaneously when the CPU writes to these registers, the access is performed using an 8-bit temporary High Byte Register (TEMP). This temporary register is shared by all the other 16-bit registers. See “Accessing 16-bit Registers” on page 135.

17.11.29 ICR1H and ICR1L – Input Capture Register 1

Bit	7	6	5	4	3	2	1	0	
(0x87)	ICR1[15:8]								ICR1H
(0x86)	ICR1[7:0]								ICR1L
Read/Write	R/W	R/W	R/W	R/W	R/W	R/W	R/W	R/W	
Initial Value	0	0	0	0	0	0	0	0	

17.11.30 ICR3H and ICR3L – Input Capture Register 3

Bit	7	6	5	4	3	2	1	0	
(0x97)	ICR3[15:8]								ICR3H
(0x96)	ICR3[7:0]								ICR3L
Read/Write	R/W	R/W	R/W	R/W	R/W	R/W	R/W	R/W	
Initial Value	0	0	0	0	0	0	0	0	

17.11.31 ICR4H and ICR4L – Input Capture Register 4

Bit	7	6	5	4	3	2	1	0	
(0xA7)	ICR4[15:8]								ICR4H
(0xA6)	ICR4[7:0]								ICR4L
Read/Write	R/W	R/W	R/W	R/W	R/W	R/W	R/W	R/W	
Initial Value	0	0	0	0	0	0	0	0	

17.11.32 ICR5H and ICR5L – Input Capture Register 5

Bit	7	6	5	4	3	2	1	0	
(0x127)	ICR5[15:8]								ICR5H
(0x126)	ICR5[7:0]								ICR5L
Read/Write	R/W	R/W	R/W	R/W	R/W	R/W	R/W	R/W	
Initial Value	0	0	0	0	0	0	0	0	

The Input Capture is updated with the counter (TCNTn) value each time an event occurs on the ICPn pin (or optionally on the Analog Comparator output for Timer/Counter1). The Input Capture can be used for defining the counter TOP value.

The Input Capture Register is 16-bit in size. To ensure that both the high and low bytes are read simultaneously when the CPU accesses these registers, the access is performed using an 8-bit temporary High Byte Register (TEMP). This temporary register is shared by all the other 16-bit registers. See “Accessing 16-bit Registers” on page 135.

17.11.33 TIMSK1 – Timer/Counter 1 Interrupt Mask Register

Bit	7	6	5	4	3	2	1	0	
(0x6F)	–	–	ICIE1	–	OCIE1C	OCIE1B	OCIE1A	TOIE1	TIMSK1
Read/Write	R	R	R/W	R	R/W	R/W	R/W	R/W	
Initial Value	0	0	0	0	0	0	0	0	

17.11.34 TIMSK3 – Timer/Counter 3 Interrupt Mask Register

Bit	7	6	5	4	3	2	1	0	
(0x71)	–	–	ICIE3	–	OCIE3C	OCIE3B	OCIE3A	TOIE3	TIMSK3
Read/Write	R	R	R/W	R	R/W	R/W	R/W	R/W	
Initial Value	0	0	0	0	0	0	0	0	

17.11.35 TIMSK4 – Timer/Counter 4 Interrupt Mask Register

Bit	7	6	5	4	3	2	1	0	
(0x72)	–	–	ICIE4	–	OCIE4C	OCIE4B	OCIE4A	TOIE4	TIMSK4
Read/Write	R	R	R/W	R	R/W	R/W	R/W	R/W	
Initial Value	0	0	0	0	0	0	0	0	

17.11.36 TIMSK5 – Timer/Counter 5 Interrupt Mask Register

Bit	7	6	5	4	3	2	1	0	
(0x73)	–	–	ICIE5	–	OCIE5C	OCIE5B	OCIE5A	TOIE5	TIMSK5
Read/Write	R	R	R/W	R	R/W	R/W	R/W	R/W	
Initial Value	0	0	0	0	0	0	0	0	

- **Bit 5 – ICIEn: Timer/Countern, Input Capture Interrupt Enable**

When this bit is written to one, and the I-flag in the Status Register is set (interrupts globally enabled), the Timer/Countern Input Capture interrupt is enabled. The corresponding Interrupt Vector (see “Interrupts” on page 101) is executed when the ICFn Flag, located in TIFRn, is set.

- **Bit 3 – OCIEnC: Timer/Countern, Output Compare C Match Interrupt Enable**

When this bit is written to one, and the I-flag in the Status Register is set (interrupts globally enabled), the Timer/Countern Output Compare C Match interrupt is enabled. The corresponding Interrupt Vector (see “Interrupts” on page 101) is executed when the OCFnC Flag, located in TIFRn, is set.

- **Bit 2 – OCIEnB: Timer/Countern, Output Compare B Match Interrupt Enable**

When this bit is written to one, and the I-flag in the Status Register is set (interrupts globally enabled), the Timer/Countern Output Compare B Match interrupt is enabled. The corresponding Interrupt Vector (see “Interrupts” on page 101) is executed when the OCFnB Flag, located in TIFRn, is set.

- **Bit 1 – OCIEnA: Timer/Countern, Output Compare A Match Interrupt Enable**

When this bit is written to one, and the I-flag in the Status Register is set (interrupts globally enabled), the Timer/Countern Output Compare A Match interrupt is enabled. The corresponding Interrupt Vector (see “Interrupts” on page 101) is executed when the OCFnA Flag, located in TIFRn, is set.

- **Bit 0 – TOIEn: Timer/Countern, Overflow Interrupt Enable**

When this bit is written to one, and the I-flag in the Status Register is set (interrupts globally enabled), the Timer/Countern Overflow interrupt is enabled. The corresponding Interrupt Vector (see “Interrupts” on page 101) is executed when the TOVn Flag, located in TIFRn, is set.

17.11.37 TIFR1 – Timer/Counter1 Interrupt Flag Register

Bit	7	6	5	4	3	2	1	0	
0x16 (0x36)	–	–	ICF1	–	OCF1C	OCF1B	OCF1A	TOV1	TIFR1
Read/Write	R	R	R/W	R	R/W	R/W	R/W	R/W	
Initial Value	0	0	0	0	0	0	0	0	

17.11.38 TIFR3 – Timer/Counter3 Interrupt Flag Register

Bit	7	6	5	4	3	2	1	0	
0x18 (0x38)	–	–	ICF3	–	OCF3C	OCF3B	OCF3A	TOV3	TIFR3
Read/Write	R	R	R/W	R	R/W	R/W	R/W	R/W	
Initial Value	0	0	0	0	0	0	0	0	

17.11.39 TIFR4 – Timer/Counter4 Interrupt Flag Register

Bit	7	6	5	4	3	2	1	0	
0x19 (0x39)	–	–	ICF4	–	OCF4C	OCF4B	OCF4A	TOV4	TIFR4
Read/Write	R	R	R/W	R	R/W	R/W	R/W	R/W	
Initial Value	0	0	0	0	0	0	0	0	

17.11.40 TIFR5 – Timer/Counter5 Interrupt Flag Register

Bit	7	6	5	4	3	2	1	0	
0x1A (0x3A)	–	–	ICF5	–	OCF5C	OCF5B	OCF5A	TOV5	TIFR5
Read/Write	R	R	R/W	R	R/W	R/W	R/W	R/W	
Initial Value	0	0	0	0	0	0	0	0	

- **Bit 5 – ICFn: Timer/Countern, Input Capture Flag**

This flag is set when a capture event occurs on the ICPn pin. When the Input Capture Register (ICRn) is set by the WGMn3:0 to be used as the TOP value, the ICFn Flag is set when the counter reaches the TOP value.

ICFn is automatically cleared when the Input Capture Interrupt Vector is executed. Alternatively, ICFn can be cleared by writing a logic one to its bit location.

- **Bit 3– OCFnC: Timer/Countern, Output Compare C Match Flag**

This flag is set in the timer clock cycle after the counter (TCNTn) value matches the Output Compare Register C (OCRnC).

Note that a Forced Output Compare (FOCnC) strobe will not set the OCFnC Flag.

OCFnC is automatically cleared when the Output Compare Match C Interrupt Vector is executed. Alternatively, OCFnC can be cleared by writing a logic one to its bit location.

- **Bit 2 – OCFnB: Timer/Counter1, Output Compare B Match Flag**

This flag is set in the timer clock cycle after the counter (TCNTn) value matches the Output Compare Register B (OCRnB).

Note that a Forced Output Compare (FOCnB) strobe will not set the OCFnB Flag.

OCFnB is automatically cleared when the Output Compare Match B Interrupt Vector is executed. Alternatively, OCFnB can be cleared by writing a logic one to its bit location.

- **Bit 1 – OCF1A: Timer/Counter1, Output Compare A Match Flag**

This flag is set in the timer clock cycle after the counter (TCNTn value matches the Output Compare Register A (OCRnA).

Note that a Forced Output Compare (FOCnA) strobe will not set the OCFnA Flag.

OCFnA is automatically cleared when the Output Compare Match A Interrupt Vector is executed. Alternatively, OCFnA can be cleared by writing a logic one to its bit location.

- **Bit 0 – TOVn: Timer/Countern, Overflow Flag**

The setting of this flag is dependent of the WGMn3:0 bits setting. In Normal and CTC modes, the TOVn Flag is set when the timer overflows. Refer to Table 17-2 on page 145 for the TOVn Flag behavior when using another WGMn3:0 bit setting.

TOVn is automatically cleared when the Timer/Countern Overflow Interrupt Vector is executed. Alternatively, TOVn can be cleared by writing a logic one to its bit location.

18. Timer/Counter 0, 1, 3, 4, and 5 Prescaler

Timer/Counter 0, 1, 3, 4, and 5 share the same prescaler module, but the Timer/Counters can have different prescaler settings. The description below applies to all Timer/Counters. Tn is used as a general name, n = 0, 1, 3, 4, or 5.

18.1 Internal Clock Source

The Timer/Counter can be clocked directly by the system clock (by setting the CSn2:0 = 1). This provides the fastest operation, with a maximum Timer/Counter clock frequency equal to system clock frequency ($f_{CLK_I/O}$). Alternatively, one of four taps from the prescaler can be used as a clock source. The prescaled clock has a frequency of either $f_{CLK_I/O}/8$, $f_{CLK_I/O}/64$, $f_{CLK_I/O}/256$, or $f_{CLK_I/O}/1024$.

18.2 Prescaler Reset

The prescaler is free running, that is, operates independently of the Clock Select logic of the Timer/Counter, and it is shared by the Timer/Counter Tn. Since the prescaler is not affected by the Timer/Counter's clock select, the state of the prescaler will have implications for situations where a prescaled clock is used. One example of prescaling artifacts occurs when the timer is enabled and clocked by the prescaler (6 > CSn2:0 > 1). The number of system clock cycles from when the timer is enabled to the first count occurs can be from 1 to N+1 system clock cycles, where N equals the prescaler divisor (8, 64, 256, or 1024).

It is possible to use the prescaler reset for synchronizing the Timer/Counter to program execution. However, care must be taken if the other Timer/Counter that shares the same prescaler also uses prescaling. A prescaler reset will affect the prescaler period for all Timer/Counters it is connected to.

18.3 External Clock Source

An external clock source applied to the Tn pin can be used as Timer/Counter clock (clk_{Tn}). The Tn pin is sampled once every system clock cycle by the pin synchronization logic. The synchronized (sampled) signal is then passed through the edge detector. Figure 18-1 shows a functional equivalent block diagram of the Tn synchronization and edge detector logic. The registers are clocked at the positive edge of the internal system clock ($clk_{I/O}$). The latch is transparent in the high period of the internal system clock.

The edge detector generates one clk_{Tn} pulse for each positive (CSn2:0 = 7) or negative (CSn2:0 = 6) edge it detects.

Figure 18-1. Tn/T0 Pin Sampling

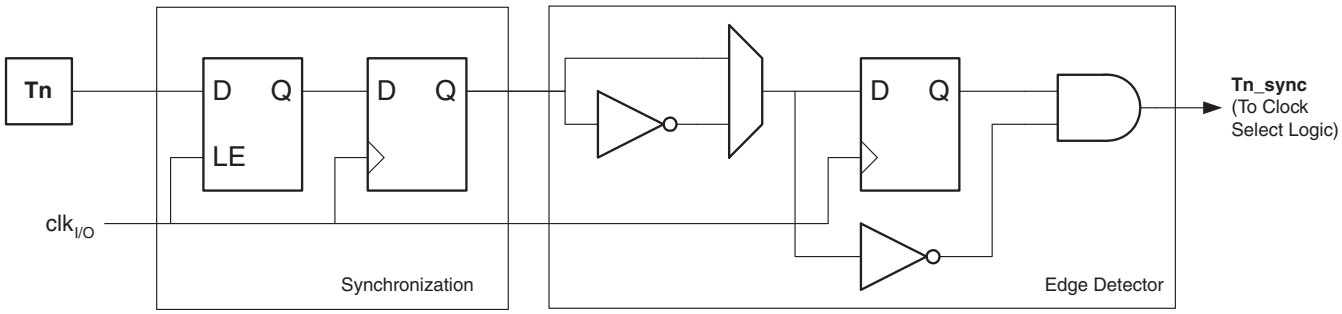

The synchronization and edge detector logic introduces a delay of 2.5 to 3.5 system clock cycles from an edge has been applied to the Tn pin to the counter is updated.

Enabling and disabling of the clock input must be done when Tn has been stable for at least one system clock cycle, otherwise it is a risk that a false Timer/Counter clock pulse is generated.

Each half period of the external clock applied must be longer than one system clock cycle to ensure correct sampling. The external clock must be guaranteed to have less than half the system clock frequency ($f_{ExtClk} < f_{clk_I/O}/2$) given a 50/50% duty cycle. Since the edge detector uses sampling, the maximum frequency of an external clock it can detect is half the sampling frequency (Nyquist sampling theorem). However, due to variation of the system clock frequency and duty cycle caused by Oscillator source (crystal, resonator, and capacitors) tolerances, it is recommended that maximum frequency of an external clock source is less than $f_{clk_I/O}/2.5$.

An external clock source can not be prescaled.

Figure 18-2. Prescaler for synchronous Timer/Counters

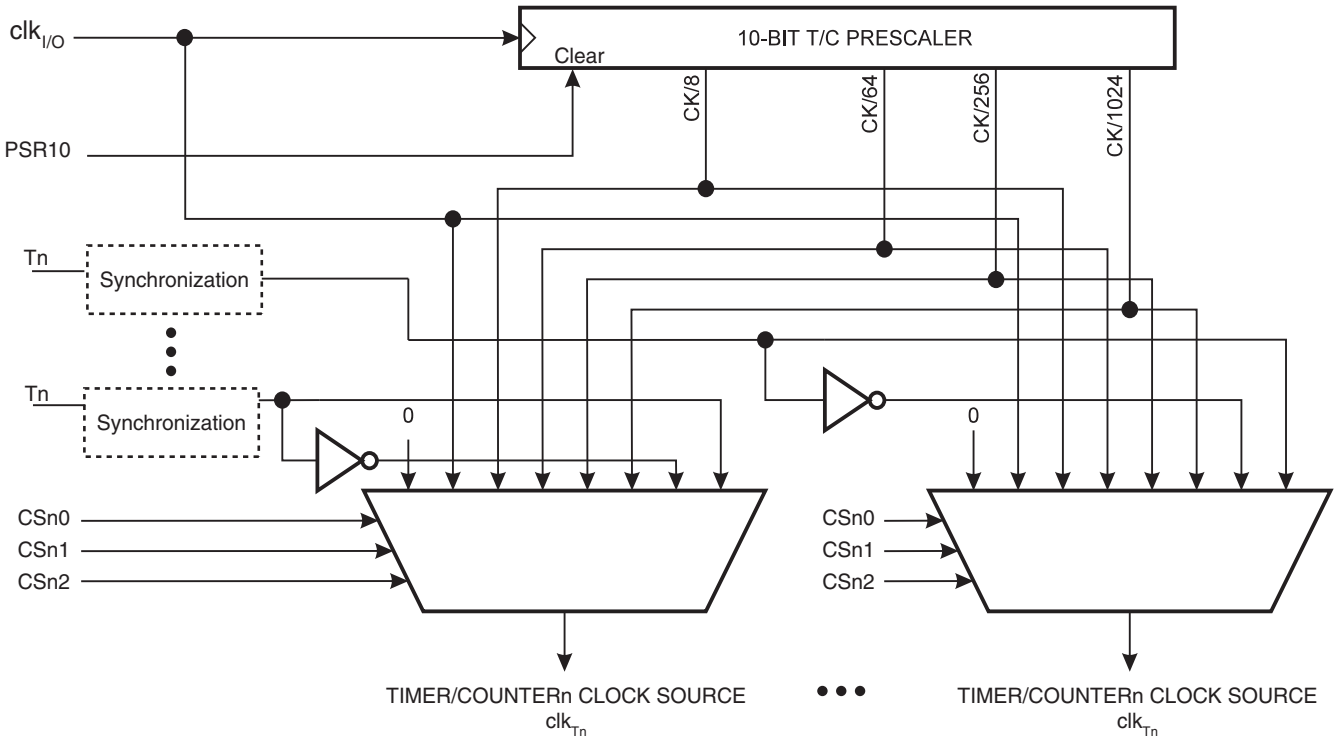

18.4 Register Description

18.4.1 GTCCR – General Timer/Counter Control Register

Bit	7	6	5	4	3	2	1	0	
0x23 (0x43)	**TSM**	–	–	–	–	–	**PSRASY**	**PSRSYNC**	**GTCCR**
Read/Write	R/W	R	R	R	R	R	R/W	R/W	
Initial Value	0	0	0	0	0	0	0	0	

- **Bit 7 – TSM: Timer/Counter Synchronization Mode**

Writing the TSM bit to one activates the Timer/Counter Synchronization mode. In this mode, the value that is written to the PSRASY and PSRSYNC bits is kept, hence keeping the corresponding prescaler reset signals asserted. This ensures that the corresponding Timer/Counters are halted and can be configured to the same value without the risk of one of them advancing during configuration. When the TSM bit is written to zero, the PSRASY and PSRSYNC bits are cleared by hardware, and the Timer/Counters start counting simultaneously.

- **Bit 0 – PSRSYNC: Prescaler Reset for Synchronous Timer/Counters**

When this bit is one, Timer/Counter0, Timer/Counter1, Timer/Counter3, Timer/Counter4 and Timer/Counter5 prescaler will be Reset. This bit is normally cleared immediately by hardware, except if the TSM bit is set. Note that Timer/Counter0, Timer/Counter1, Timer/Counter3, Timer/Counter4 and Timer/Counter5 share the same prescaler and a reset of this prescaler will affect all timers.

19. Output Compare Modulator (OCM1C0A)

19.1 Overview

The Output Compare Modulator (OCM) allows generation of waveforms modulated with a carrier frequency. The modulator uses the outputs from the Output Compare Unit C of the 16-bit Timer/Counter1 and the Output Compare Unit of the 8-bit Timer/Counter0. For more details about these Timer/Counters see "Timer/Counter 0, 1, 3, 4, and 5 Prescaler" on page 164 and "8-bit Timer/Counter2 with PWM and Asynchronous Operation" on page 169.

Figure 19-1. Output Compare Modulator, Block Diagram

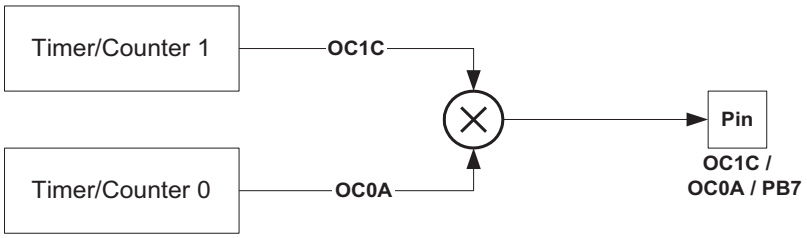

When the modulator is enabled, the two output compare channels are modulated together as shown in the block diagram (see Figure 19-1).

19.2 Description

The Output Compare unit 1C and Output Compare unit 2 shares the PB7 port pin for output. The outputs of the Output Compare units (OC1C and OC0A) overrides the normal PORTB7 Register when one of them is enabled (that is, when COMnx1:0 is not equal to zero). When both OC1C and OC0A are enabled at the same time, the modulator is automatically enabled.

The functional equivalent schematic of the modulator is shown on Figure 19-2. The schematic includes part of the Timer/Counter units and the port B pin 7 output driver circuit.

Figure 19-2. Output Compare Modulator, Schematic

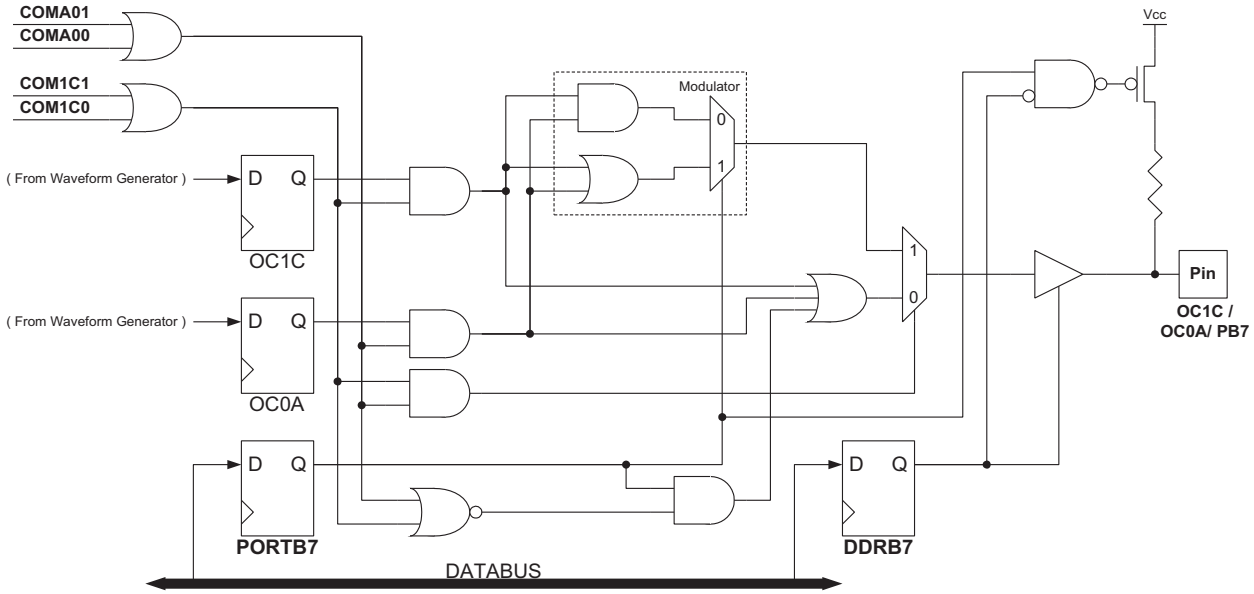

When the modulator is enabled the type of modulation (logical AND or OR) can be selected by the PORTB7 Register. Note that the DDRB7 controls the direction of the port independent of the COMnx1:0 bit setting.

19.2.1 Timing example

Figure 19-3 illustrates the modulator in action. In this example the Timer/Counter1 is set to operate in fast PWM mode (non-inverted) and Timer/Counter0 uses CTC waveform mode with toggle Compare Output mode (COMnx1:0 = 1).

Figure 19-3. Output Compare Modulator, Timing Diagram

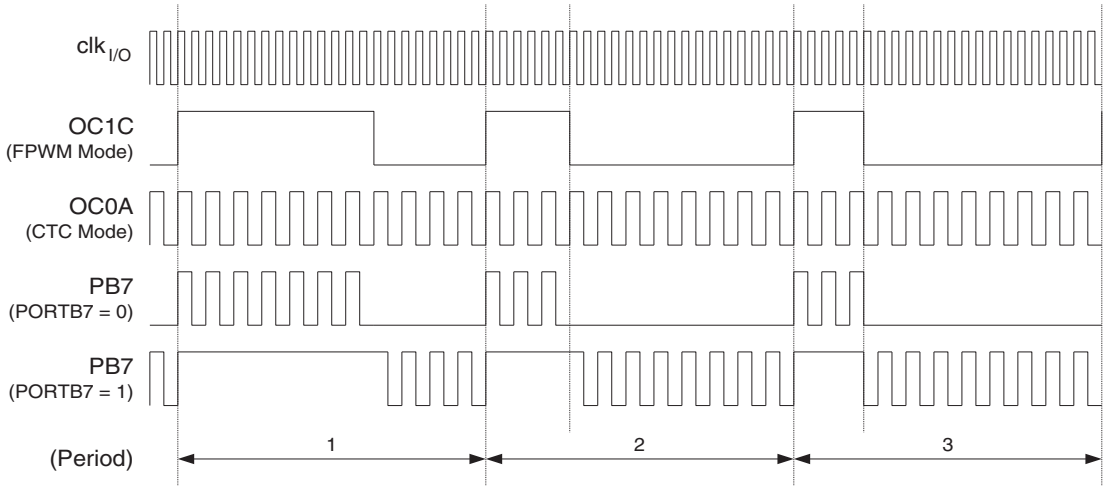

In this example, Timer/Counter2 provides the carrier, while the modulating signal is generated by the Output Compare unit C of the Timer/Counter1.

The resolution of the PWM signal (OC1C) is reduced by the modulation. The reduction factor is equal to the number of system clock cycles of one period of the carrier (OC0A). In this example the resolution is reduced by a factor of two. The reason for the reduction is illustrated in Figure 19-3 at the second and third period of the PB7 output when PORTB7 equals zero. The period 2 high time is one cycle longer than the period 3 high time, but the result on the PB7 output is equal in both periods.

20. 8-bit Timer/Counter2 with PWM and Asynchronous Operation

Timer/Counter2 is a general purpose, single channel, 8-bit Timer/Counter module. The main features are:

- **Single Channel Counter**
- **Clear Timer on Compare Match (Auto Reload)**
- **Glitch-free, Phase Correct Pulse Width Modulator (PWM)**
- **Frequency Generator**
- **10-bit Clock Prescaler**
- **Overflow and Compare Match Interrupt Sources (TOV2, OCF2A and OCF2B)**
- **Allows Clocking from External 32kHz Watch Crystal Independent of the I/O Clock**

20.1 Overview

A simplified block diagram of the 8-bit Timer/Counter is shown in Figure 17-12 on page 153 For the actual placement of I/O pins, see "Pin Configurations" on page 2. CPU accessible I/O Registers, including I/O bits and I/O pins, are shown in bold. The device-specific I/O Register and bit locations are listed in the "Register Description" on page 182.

The Power Reduction Timer/Counter2 bit, PRTIM2, in "PRR0 – Power Reduction Register 0" on page 55 must be written to zero to enable Timer/Counter2 module.

Figure 20-1. 8-bit Timer/Counter Block Diagram

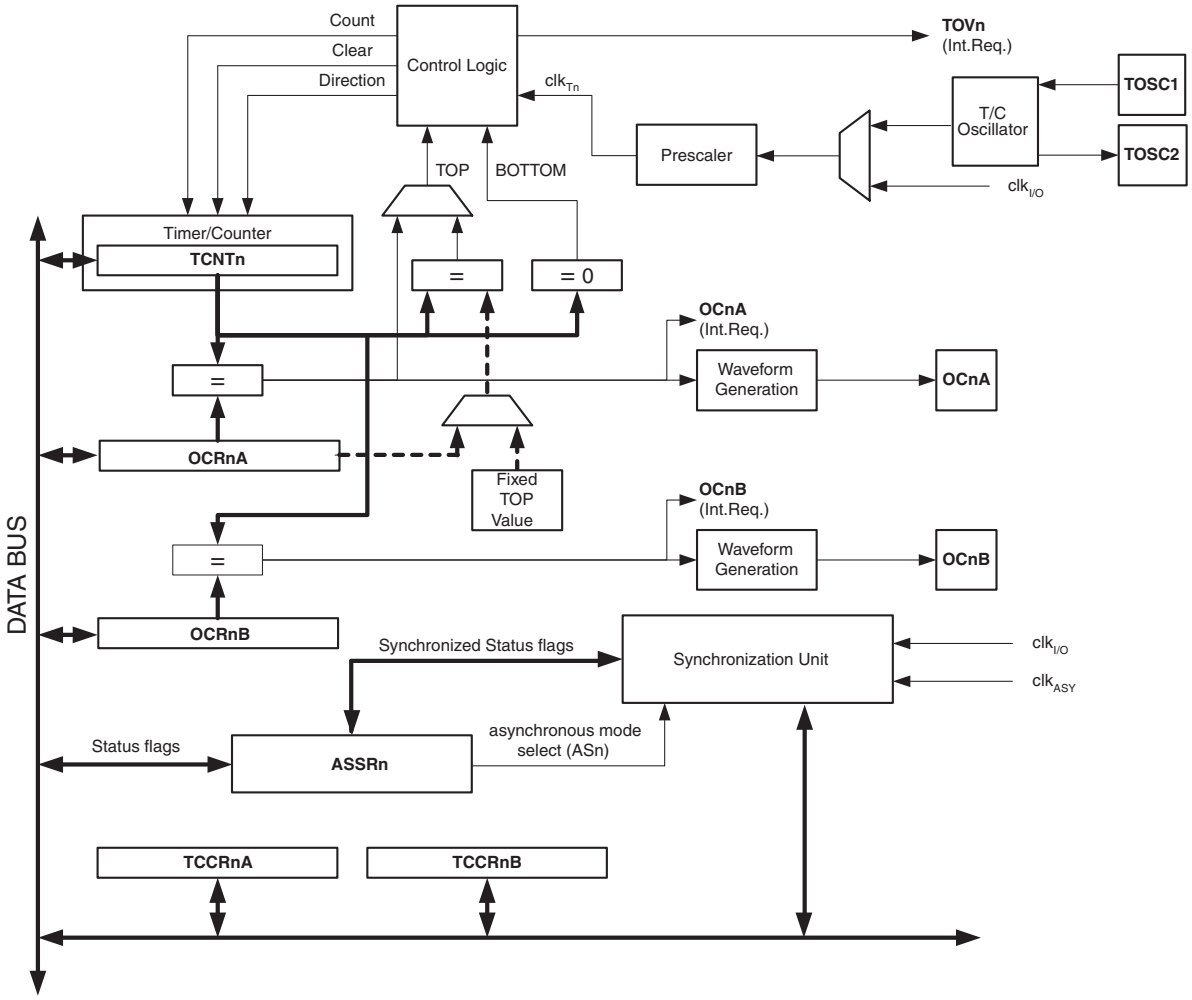

20.1.1 Registers

The Timer/Counter (TCNT2) and Output Compare Register (OCR2A and OCR2B) are 8-bit registers. Interrupt request (abbreviated to Int.Req.) signals are all visible in the Timer Interrupt Flag Register (TIFR2). All interrupts are individually masked with the Timer Interrupt Mask Register (TIMSK2). TIFR2 and TIMSK2 are not shown in the figure.

The Timer/Counter can be clocked internally, via the prescaler, or asynchronously clocked from the TOSC1/2 pins, as detailed later in this section. The asynchronous operation is controlled by the Asynchronous Status Register (ASSR). The Clock Select logic block controls which clock source the Timer/Counter uses to increment (or decrement) its value. The Timer/Counter is inactive when no clock source is selected. The output from the Clock Select logic is referred to as the timer clock (clk_{T2}).

The double buffered Output Compare Register (OCR2A and OCR2B) are compared with the Timer/Counter value at all times. The result of the compare can be used by the Waveform Generator to generate a PWM or variable frequency output on the Output Compare pins (OC2A and OC2B). See “Output Compare Unit” on page 175 for details. The compare match event will also set the Compare Flag (OCF2A or OCF2B) which can be used to generate an Output Compare interrupt request.

20.1.2 Definitions

Many register and bit references in this document are written in general form. A lower case “n” replaces the Timer/Counter number, in this case 2. However, when using the register or bit defines in a program, the precise form must be used, that is, TCNT2 for accessing Timer/Counter2 counter value and so on.

The definitions in Table 20-1 are also used extensively throughout the section.

Table 20-1. Definitions

BOTTOM	The counter reaches the BOTTOM when it becomes zero (0x00)
MAX	The counter reaches its MAXimum when it becomes 0xFF (decimal 255)
TOP	The counter reaches the TOP when it becomes equal to the highest value in the count sequence. The TOP value can be assigned to be the fixed value 0xFF (MAX) or the value stored in the OCR2A Register. The assignment is dependent on the mode of operation

20.2 Timer/Counter Clock Sources

The Timer/Counter can be clocked by an internal synchronous or an external asynchronous clock source. The clock source clk_{T2} is by default equal to the MCU clock, $clk_{I/O}$. When the AS2 bit in the ASSR Register is written to logic one, the clock source is taken from the Timer/Counter Oscillator connected to TOSC1 and TOSC2. For details on asynchronous operation, see “Asynchronous Operation of Timer/Counter2” on page 179. For details on clock sources and prescaler, see “Timer/Counter Prescaler” on page 180.

20.3 Counter Unit

The main part of the 8-bit Timer/Counter is the programmable bi-directional counter unit. Figure 20-2 on page 171 shows a block diagram of the counter and its surrounding environment.

Figure 20-2. Counter Unit Block Diagram

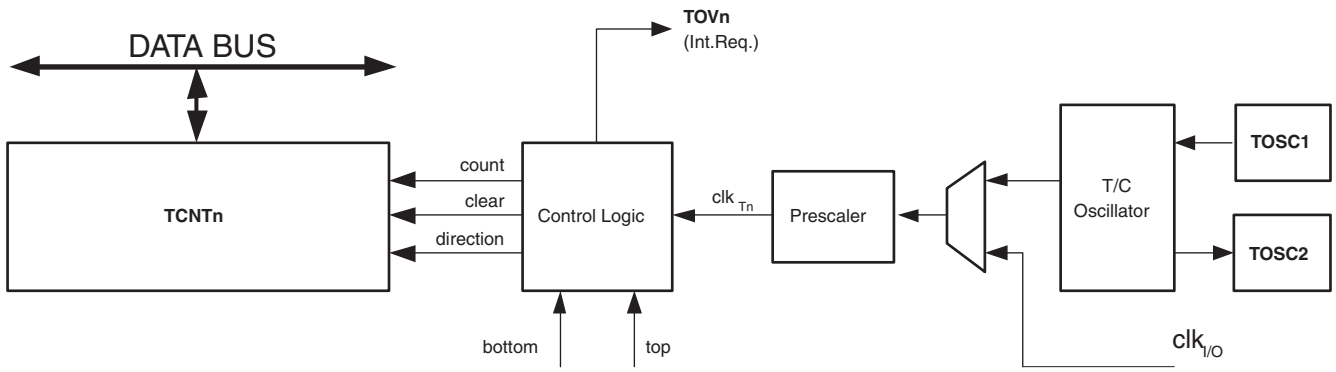

Signal description (internal signals):

count	Increment or decrement TCNT2 by 1.
direction	Selects between increment and decrement.
clear	Clear TCNT2 (set all bits to zero).
clk_{Tn}	Timer/Counter clock, referred to as clk_{T2} in the following.
top	Signalizes that TCNT2 has reached maximum value.
bottom	Signalizes that TCNT2 has reached minimum value (zero).

Depending on the mode of operation used, the counter is cleared, incremented, or decremented at each timer clock (clk_{T2}). clk_{T2} can be generated from an external or internal clock source, selected by the Clock Select bits (CS22:0). When no clock source is selected (CS22:0 = 0) the timer is stopped. However, the TCNT2 value can be accessed by the CPU, regardless of whether clk_{T2} is present or not. A CPU write overrides (has priority over) all counter clear or count operations.

The counting sequence is determined by the setting of the WGM21 and WGM20 bits located in the Timer/Counter Control Register (TCCR2A) and the WGM22 located in the Timer/Counter Control Register B (TCCR2B). There are close connections between how the counter behaves (counts) and how waveforms are generated on the Output Compare outputs OC2A and OC2B. For more details about advanced counting sequences and waveform generation, see “Modes of Operation” .

The Timer/Counter Overflow Flag (TOV2) is set according to the mode of operation selected by the WGM22:0 bits. TOV2 can be used for generating a CPU interrupt.

20.4 Modes of Operation

The mode of operation, that is, the behavior of the Timer/Counter and the Output Compare pins, is defined by the combination of the Waveform Generation mode (WGM22:0) and Compare Output mode (COM2x1:0) bits. The Compare Output mode bits do not affect the counting sequence, while the Waveform Generation mode bits do. The COM2x1:0 bits control whether the PWM output generated should be inverted or not (inverted or non-inverted PWM). For non-PWM modes the COM2x1:0 bits control whether the output should be set, cleared, or toggled at a compare match. See “Compare Match Output Unit” on page 176.

For detailed timing information refer to “Timer/Counter Timing Diagrams” on page 177.

20.4.1 Normal Mode

The simplest mode of operation is the Normal mode (WGM22:0 = 0). In this mode the counting direction is always up (incrementing), and no counter clear is performed. The counter simply overruns when it passes its maximum 8-bit value (TOP = 0xFF) and then restarts from the bottom (0x00). In normal operation the Timer/Counter Overflow Flag (TOV2) will be set in the same timer clock cycle as the TCNT2 becomes zero. The TOV2 Flag in this case behaves like a ninth bit, except that it is only set, not cleared. However, combined with the timer overflow interrupt that automatically clears the TOV2 Flag, the timer resolution can be increased by software. There are no special cases to consider in the Normal mode, a new counter value can be written anytime.

The Output Compare unit can be used to generate interrupts at some given time. Using the Output Compare to generate waveforms in Normal mode is not recommended, since this will occupy too much of the CPU time.

20.4.2 Clear Timer on Compare Match (CTC) Mode

In Clear Timer on Compare or CTC mode (WGM22:0 = 2), the OCR2A Register is used to manipulate the counter resolution. In CTC mode the counter is cleared to zero when the counter value (TCNT2) matches the OCR2A. The OCR2A defines the top value for the counter, hence also its resolution. This mode allows greater control of the compare match output frequency. It also simplifies the operation of counting external events.

The timing diagram for the CTC mode is shown in Figure 20-3. The counter value (TCNT2) increases until a compare match occurs between TCNT2 and OCR2A, and then counter (TCNT2) is cleared.

Figure 20-3. CTC Mode, Timing Diagram

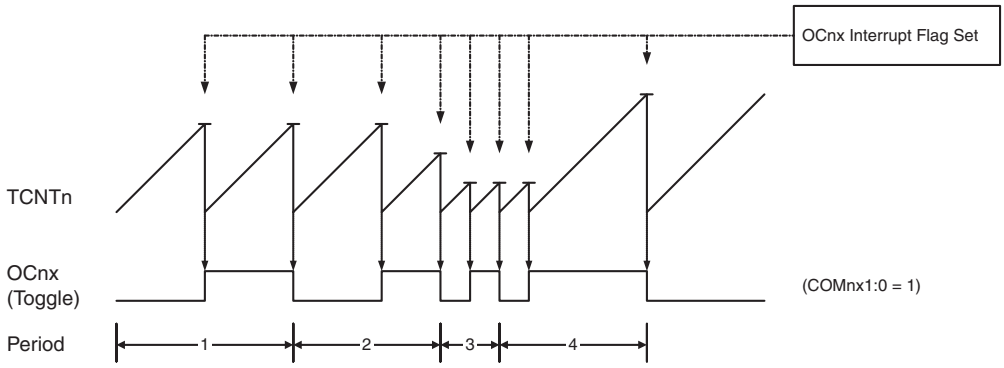

An interrupt can be generated each time the counter value reaches the TOP value by using the OCF2A Flag. If the interrupt is enabled, the interrupt handler routine can be used for updating the TOP value. However, changing TOP to a value close to BOTTOM when the counter is running with none or a low prescaler value must be done with care since the CTC mode does not have the double buffering feature. If the new value written to OCR2A is lower than the current value of TCNT2, the counter will miss the compare match. The counter will then have to count to its maximum value (0xFF) and wrap around starting at 0x00 before the compare match can occur.

For generating a waveform output in CTC mode, the OC2A output can be set to toggle its logical level on each compare match by setting the Compare Output mode bits to toggle mode (COM2A1:0 = 1). The OC2A value will not be visible on the port pin unless the data direction for the pin is set to output. The waveform generated will have a maximum frequency of $f_{OC2A} = f_{clk_I/O}/2$ when OCR2A is set to zero (0x00). The waveform frequency is defined by the following equation:

$$f_{OCnx} = \frac{f_{\text{clk_I/O}}}{2 \cdot N \cdot (1 + OCRnx)}$$

The *N* variable represents the prescale factor (1, 8, 32, 64, 128, 256, or 1024).

As for the Normal mode of operation, the TOV2 Flag is set in the same timer clock cycle that the counter counts from MAX to 0x00.

20.4.3 Fast PWM Mode

Figure 20-4. Fast PWM Mode, Timing Diagram

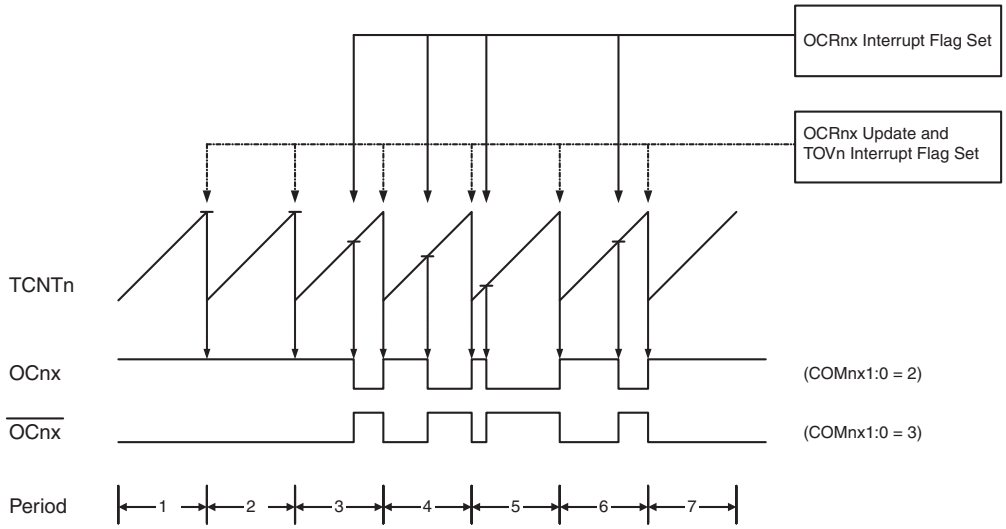

The Timer/Counter Overflow Flag (TOV2) is set each time the counter reaches TOP. If the interrupt is enabled, the interrupt handler routine can be used for updating the compare value.

In fast PWM mode, the compare unit allows generation of PWM waveforms on the OC2x pin. Setting the COM2x1:0 bits to two will produce a non-inverted PWM and an inverted PWM output can be generated by setting the COM2x1:0 to three. TOP is defined as 0xFF when WGM2:0 = 3, and OCR2A when WGM2:0 = 7 (see Table 20-3 on page 182). The actual OC2x value will only be visible on the port pin if the data direction for the port pin is set as output. The PWM waveform is generated by setting (or clearing) the OC2x Register at the compare match between OCR2x and TCNT2, and clearing (or setting) the OC2x Register at the timer clock cycle the counter is cleared (changes from TOP to BOTTOM).

The PWM frequency for the output can be calculated by the following equation:

$$f_{OCnxPWM} = \frac{f_{\text{clk_I/O}}}{N \cdot 256}$$

The *N* variable represents the prescale factor (1, 8, 32, 64, 128, 256, or 1024).

The extreme values for the OCR2A Register represent special cases when generating a PWM waveform output in the fast PWM mode. If the OCR2A is set equal to BOTTOM, the output will be a narrow spike for each MAX+1 timer clock cycle. Setting the OCR2A equal to MAX will result in a constantly high or low output (depending on the polarity of the output set by the COM2A1:0 bits).

A frequency (with 50% duty cycle) waveform output in fast PWM mode can be achieved by setting OC2x to toggle its logical level on each compare match (COM2x1:0 = 1). The waveform generated will have a maximum frequency of $f_{oc2} = f_{clk_I/O}/2$ when OCR2A is set to zero. This feature is similar to the OC2A toggle in CTC mode, except the double buffer feature of the Output Compare unit is enabled in the fast PWM mode.

20.4.4 Phase Correct PWM Mode

The phase correct PWM mode (WGM22:0 = 1 or 5) provides a high resolution phase correct PWM waveform generation option. The phase correct PWM mode is based on a dual-slope operation. The counter counts repeatedly from BOTTOM to TOP and then from TOP to BOTTOM. TOP is defined as 0xFF when WGM22:0 = 1, and OCR2A when MGM22:0 = 5. In non-inverting Compare Output mode, the Output Compare (OC2x) is cleared on the compare match between TCNT2 and OCR2x while upcounting, and set on the compare match while downcounting. In inverting Output Compare mode, the operation is inverted. The dual-slope operation has lower maximum operation

frequency than single slope operation. However, due to the symmetric feature of the dual-slope PWM modes, these modes are preferred for motor control applications.

In phase correct PWM mode the counter is incremented until the counter value matches TOP. When the counter reaches TOP, it changes the count direction. The TCNT2 value will be equal to TOP for one timer clock cycle. The timing diagram for the phase correct PWM mode is shown on Figure 20-5. The TCNT2 value is in the timing diagram shown as a histogram for illustrating the dual-slope operation. The diagram includes non-inverted and inverted PWM outputs. The small horizontal line marks on the TCNT2 slopes represent compare matches between OCR2x and TCNT2.

Figure 20-5. Phase Correct PWM Mode, Timing Diagram

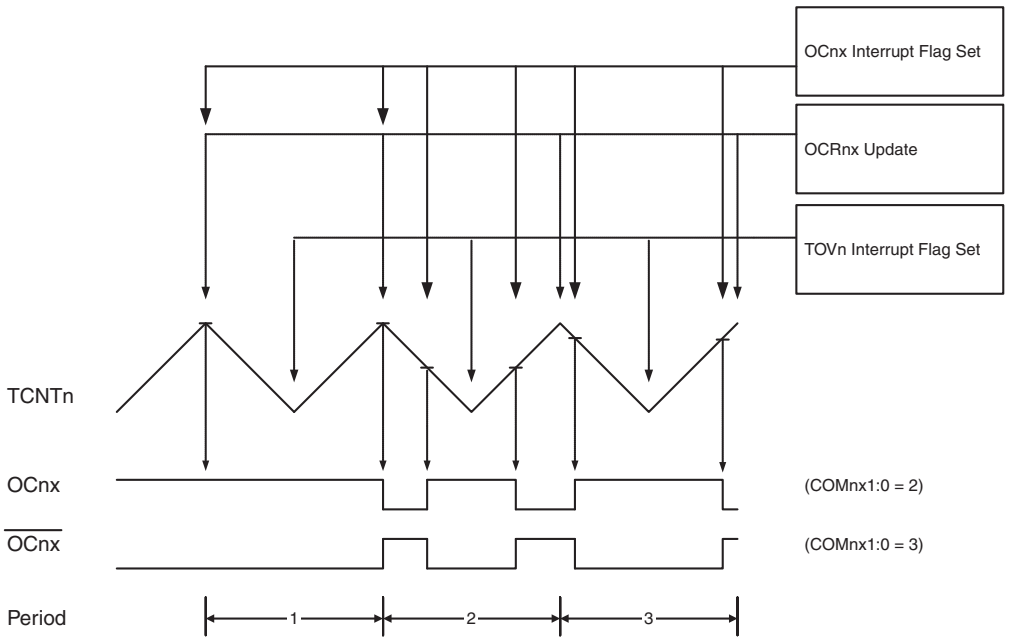

The Timer/Counter Overflow Flag (TOV2) is set each time the counter reaches BOTTOM. The Interrupt Flag can be used to generate an interrupt each time the counter reaches the BOTTOM value.

In phase correct PWM mode, the compare unit allows generation of PWM waveforms on the OC2x pin. Setting the COM2x1:0 bits to two will produce a non-inverted PWM. An inverted PWM output can be generated by setting the COM2x1:0 to three. TOP is defined as 0xFF when WGM2:0 = 3, and OCR2A when MGM2:0 = 7 (see Table 20-4 on page 183). The actual OC2x value will only be visible on the port pin if the data direction for the port pin is set as output. The PWM waveform is generated by clearing (or setting) the OC2x Register at the compare match between OCR2x and TCNT2 when the counter increments, and setting (or clearing) the OC2x Register at compare match between OCR2x and TCNT2 when the counter decrements. The PWM frequency for the output when using phase correct PWM can be calculated by the following equation:

$$f_{OCnxPCPWM} = \frac{f_{\text{clk_I/O}}}{N \cdot 510}$$

The *N* variable represents the prescale factor (1, 8, 32, 64, 128, 256, or 1024).

The extreme values for the OCR2A Register represent special cases when generating a PWM waveform output in the phase correct PWM mode. If the OCR2A is set equal to BOTTOM, the output will be continuously low and if set equal to MAX the output will be continuously high for non-inverted PWM mode. For inverted PWM the output will have the opposite logic values.

At the very start of period 2 in Figure 20-5 on page 174 OCnx has a transition from high to low even though there is no Compare Match. The point of this transition is to guarantee symmetry around BOTTOM. There are two cases that give a transition without Compare Match.

- OCR2A changes its value from MAX, like in Figure 20-5 on page 174. When the OCR2A value is MAX the OCn pin value is the same as the result of a down-counting compare match. To ensure symmetry around BOTTOM the OCn value at MAX must correspond to the result of an up-counting Compare Match.
- The timer starts counting from a value higher than the one in OCR2A, and for that reason misses the Compare Match and hence the OCn change that would have happened on the way up.

20.5 Output Compare Unit

The 8-bit comparator continuously compares TCNT2 with the Output Compare Register (OCR2A and OCR2B). Whenever TCNT2 equals OCR2A or OCR2B, the comparator signals a match. A match will set the Output Compare Flag (OCF2A or OCF2B) at the next timer clock cycle. If the corresponding interrupt is enabled, the Output Compare Flag generates an Output Compare interrupt. The Output Compare Flag is automatically cleared when the interrupt is executed. Alternatively, the Output Compare Flag can be cleared by software by writing a logical one to its I/O bit location. The Waveform Generator uses the match signal to generate an output according to operating mode set by the WGM22:0 bits and Compare Output mode (COM2x1:0) bits. The max and bottom signals are used by the Waveform Generator for handling the special cases of the extreme values in some modes of operation (see "Modes of Operation" on page 171).

Figure 20-6 shows a block diagram of the Output Compare unit.

Figure 20-6. Output Compare Unit, Block Diagram

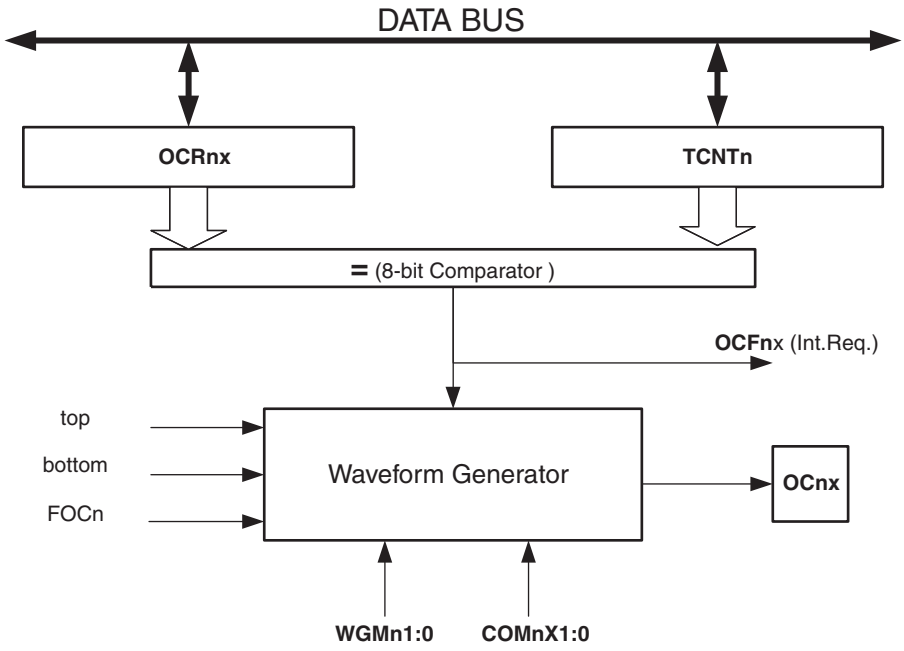

The OCR2x Register is double buffered when using any of the Pulse Width Modulation (PWM) modes. For the Normal and Clear Timer on Compare (CTC) modes of operation, the double buffering is disabled. The double buffering synchronizes the update of the OCR2x Compare Register to either top or bottom of the counting sequence. The synchronization prevents the occurrence of odd-length, non-symmetrical PWM pulses, thereby making the output glitch-free.

The OCR2x Register access may seem complex, but this is not case. When the double buffering is enabled, the CPU has access to the OCR2x Buffer Register, and if double buffering is disabled the CPU will access the OCR2x directly.

20.5.1 Force Output Compare

In non-PWM waveform generation modes, the match output of the comparator can be forced by writing a one to the Force Output Compare (FOC2x) bit. Forcing compare match will not set the OCF2x Flag or reload/clear the timer, but the OC2x pin will be updated as if a real compare match had occurred (the COM2x1:0 bits settings define whether the OC2x pin is set, cleared or toggled).

20.5.2 Compare Match Blocking by TCNT2 Write

All CPU write operations to the TCNT2 Register will block any compare match that occurs in the next timer clock cycle, even when the timer is stopped. This feature allows OCR2x to be initialized to the same value as TCNT2 without triggering an interrupt when the Timer/Counter clock is enabled.

20.5.3 Using the Output Compare Unit

Since writing TCNT2 in any mode of operation will block all compare matches for one timer clock cycle, there are risks involved when changing TCNT2 when using the Output Compare channel, independently of whether the Timer/Counter is running or not. If the value written to TCNT2 equals the OCR2x value, the compare match will be missed, resulting in incorrect waveform generation. Similarly, do not write the TCNT2 value equal to BOTTOM when the counter is downcounting.

The setup of the OC2x should be performed before setting the Data Direction Register for the port pin to output. The easiest way of setting the OC2x value is to use the Force Output Compare (FOC2x) strobe bit in Normal mode. The OC2x Register keeps its value even when changing between Waveform Generation modes.

Be aware that the COM2x1:0 bits are not double buffered together with the compare value. Changing the COM2x1:0 bits will take effect immediately.

20.6 Compare Match Output Unit

The Compare Output mode (COM2x1:0) bits have two functions. The Waveform Generator uses the COM2x1:0 bits for defining the Output Compare (OC2x) state at the next compare match. Also, the COM2x1:0 bits control the OC2x pin output source. Figure 20-7 on page 177 shows a simplified schematic of the logic affected by the COM2x1:0 bit setting. The I/O Registers, I/O bits, and I/O pins in the figure are shown in bold. Only the parts of the general I/O Port Control Registers (DDR and PORT) that are affected by the COM2x1:0 bits are shown. When referring to the OC2x state, the reference is for the internal OC2x Register, not the OC2x pin.

Figure 20-7. Compare Match Output Unit, Schematic

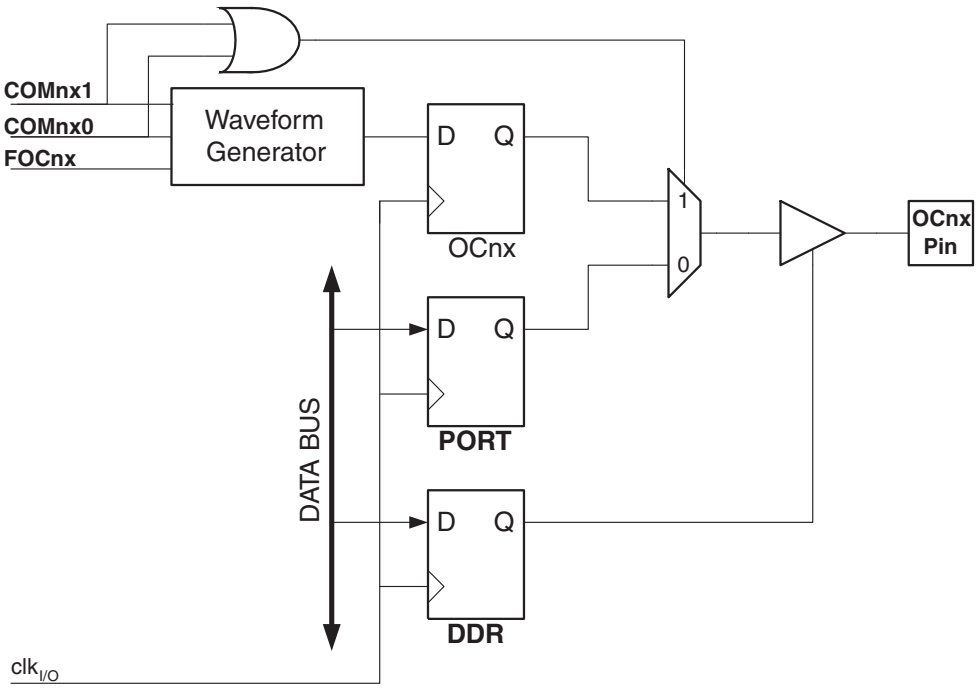

The general I/O port function is overridden by the Output Compare (OC2x) from the Waveform Generator if either of the COM2x1:0 bits are set. However, the OC2x pin direction (input or output) is still controlled by the Data Direction Register (DDR) for the port pin. The Data Direction Register bit for the OC2x pin (DDR_OC2x) must be set as output before the OC2x value is visible on the pin. The port override function is independent of the Waveform Generation mode.

The design of the Output Compare pin logic allows initialization of the OC2x state before the output is enabled. Note that some COM2x1:0 bit settings are reserved for certain modes of operation. See “Register Description” on page 182.

20.6.1 Compare Output Mode and Waveform Generation

The Waveform Generator uses the COM2x1:0 bits differently in normal, CTC, and PWM modes. For all modes, setting the COM2x1:0 = 0 tells the Waveform Generator that no action on the OC2x Register is to be performed on the next compare match. For compare output actions in the non-PWM modes refer to Table 20-5 on page 183. For fast PWM mode, refer to Table 20-6 on page 183, and for phase correct PWM refer to Table 20-7 on page 184.

A change of the COM2x1:0 bits state will have effect at the first compare match after the bits are written. For non-PWM modes, the action can be forced to have immediate effect by using the FOC2x strobe bits.

20.7 Timer/Counter Timing Diagrams

The following figures show the Timer/Counter in synchronous mode, and the timer clock (clk_{T2}) is therefore shown as a clock enable signal. In asynchronous mode, $clk_{I/O}$ should be replaced by the Timer/Counter Oscillator clock. The figures include information on when Interrupt Flags are set. Figure 20-8 on page 178 contains timing data for basic Timer/Counter operation. The figure shows the count sequence close to the MAX value in all modes other than phase correct PWM mode.

Figure 20-8. Timer/Counter Timing Diagram, no Prescaling

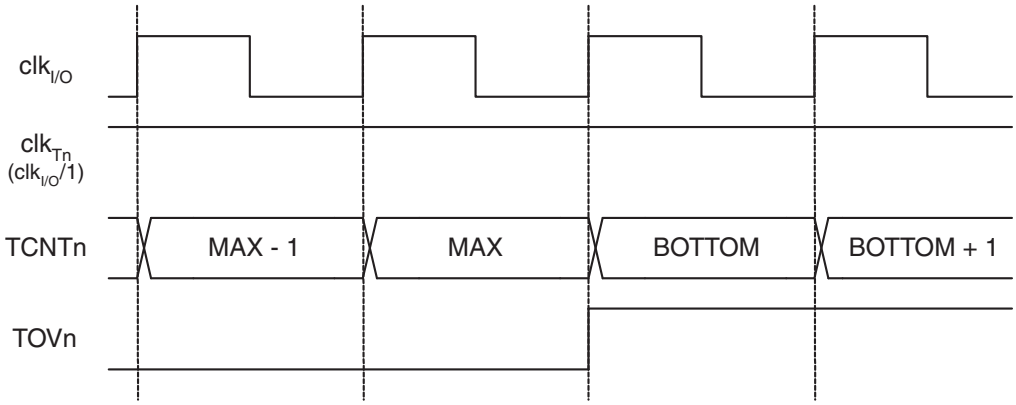

Figure 20-9 shows the same timing data, but with the prescaler enabled.

Figure 20-9. Timer/Counter Timing Diagram, with Prescaler ($f_{clk_I/O}$/8)

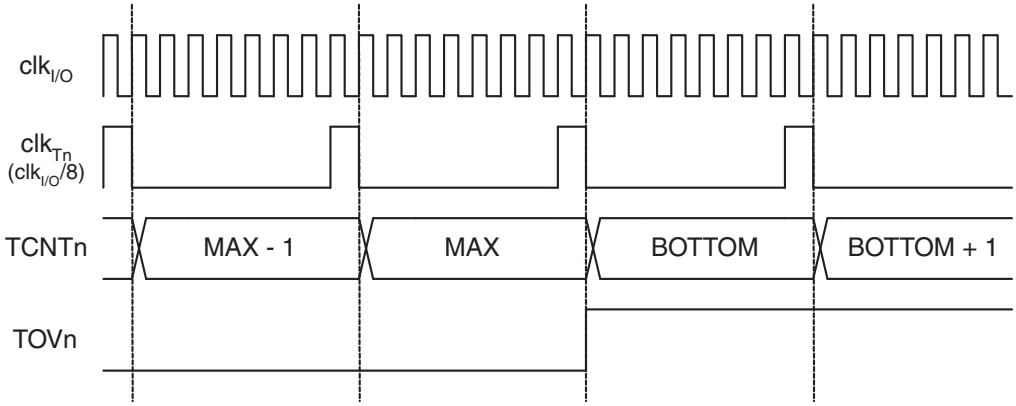

Figure 20-10 shows the setting of OCF2A in all modes except CTC mode.

Figure 20-10. Timer/Counter Timing Diagram, Setting of OCF2A, with Prescaler ($f_{clk_I/O}$/8)

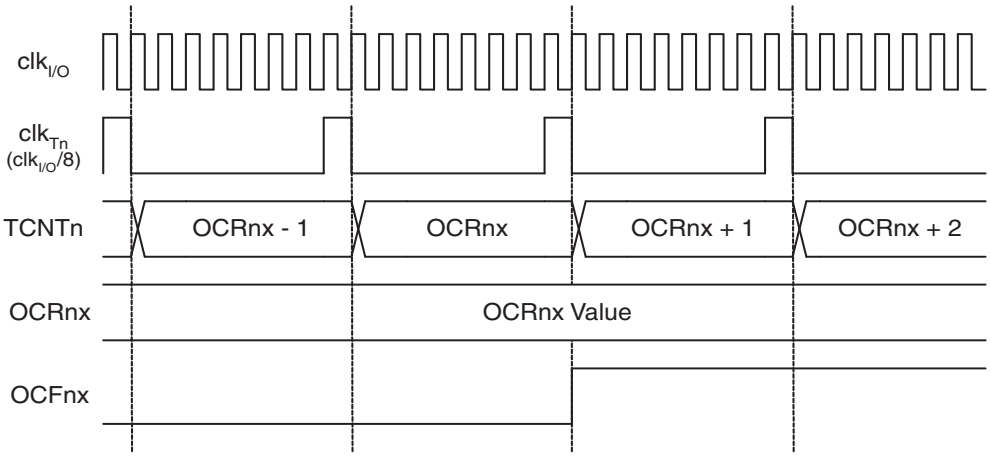

Figure 20-11 shows the setting of OCF2A and the clearing of TCNT2 in CTC mode.

Figure 20-11. Timer/Counter Timing Diagram, Clear Timer on Compare Match mode, with Prescaler ($f_{clk_I/O}/8$)

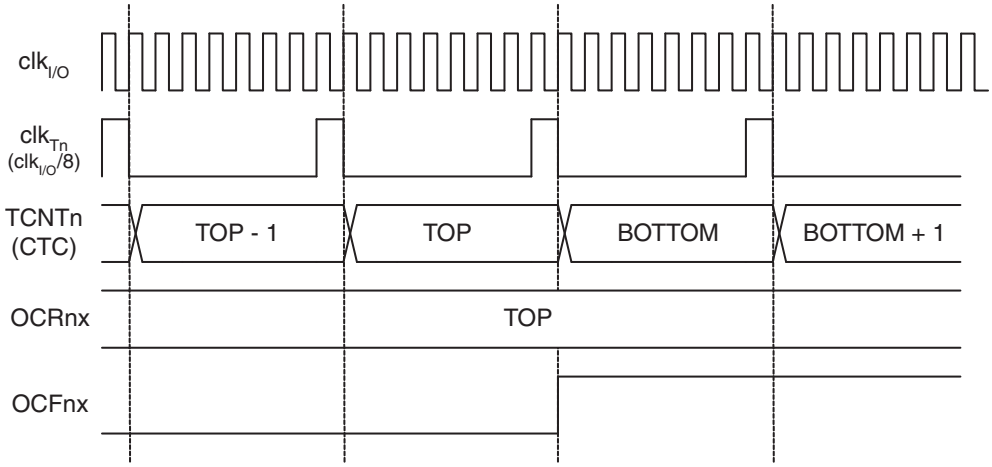

20.8 Asynchronous Operation of Timer/Counter2

When Timer/Counter2 operates asynchronously, some considerations must be taken.

- Warning: When switching between asynchronous and synchronous clocking of Timer/Counter2, the Timer Registers TCNT2, OCR2x, and TCCR2x might be corrupted. A safe procedure for switching clock source is:
  1. Disable the Timer/Counter2 interrupts by clearing OCIE2x and TOIE2.
  2. Select clock source by setting AS2 as appropriate.
  3. Write new values to TCNT2, OCR2x, and TCCR2x.
  4. To switch to asynchronous operation: Wait for TCN2UB, OCR2xUB, and TCR2xUB.
  5. Clear the Timer/Counter2 Interrupt Flags.
  6. Enable interrupts, if needed.
- The CPU main clock frequency must be more than four times the Oscillator frequency.
- When writing to one of the registers TCNT2, OCR2x, or TCCR2x, the value is transferred to a temporary register, and latched after two positive edges on TOSC1. The user should not write a new value before the contents of the temporary register have been transferred to its destination. Each of the five mentioned registers have their individual temporary register, which means that, for example, writing to TCNT2 does not disturb an OCR2x write in progress. To detect that a transfer to the destination register has taken place, the Asynchronous Status Register – ASSR has been implemented.
- When entering Power-save or ADC Noise Reduction mode after having written to TCNT2, OCR2x, or TCCR2x, the user must wait until the written register has been updated if Timer/Counter2 is used to wake up the device. Otherwise, the MCU will enter sleep mode before the changes are effective. This is particularly important if any of the Output Compare2 interrupt is used to wake up the device, since the Output Compare function is disabled during writing to OCR2x or TCNT2. If the write cycle is not finished, and the MCU enters sleep mode before the corresponding OCR2xUB bit returns to zero, the device will never receive a compare match interrupt, and the MCU will not wake up.
- If Timer/Counter2 is used to wake the device up from Power-save or ADC Noise Reduction mode, precautions must be taken if the user wants to re-enter one of these modes: The interrupt logic needs one TOSC1 cycle to be reset. If the time between wake-up and re-entering sleep mode is less than one TOSC1 cycle, the interrupt will not occur, and the device will fail to wake up. If the user is in doubt whether the time before re-entering Power-save or ADC Noise Reduction mode is sufficient, the following algorithm can be used to ensure that one TOSC1 cycle has elapsed:

1. Write a value to TCCR2x, TCNT2, or OCR2x.
2. Wait until the corresponding Update Busy Flag in ASSR returns to zero.
3. Enter Power-save or ADC Noise Reduction mode.

- When the asynchronous operation is selected, the 32.768kHz Oscillator for Timer/Counter2 is always running, except in Power-down and Standby modes. After a Power-up Reset or wake-up from Power-down or Standby mode, the user should be aware of the fact that this Oscillator might take as long as one second to stabilize. The user is advised to wait for at least one second before using Timer/Counter2 after power-up or wake-up from Power-down or Standby mode. The contents of all Timer/Counter2 Registers must be considered lost after a wake-up from Power-down or Standby mode due to unstable clock signal upon start-up, no matter whether the Oscillator is in use or a clock signal is applied to the TOSC1 pin.
- Description of wake up from Power-save or ADC Noise Reduction mode when the timer is clocked asynchronously: When the interrupt condition is met, the wake up process is started on the following cycle of the timer clock, that is, the timer is always advanced by at least one before the processor can read the counter value. After wake-up, the MCU is halted for four cycles, it executes the interrupt routine, and resumes execution from the instruction following SLEEP.
- Reading of the TCNT2 Register shortly after wake-up from Power-save may give an incorrect result. Since TCNT2 is clocked on the asynchronous TOSC clock, reading TCNT2 must be done through a register synchronized to the internal I/O clock domain. Synchronization takes place for every rising TOSC1 edge. When waking up from Power-save mode, and the I/O clock ($clk_{I/O}$) again becomes active, TCNT2 will read as the previous value (before entering sleep) until the next rising TOSC1 edge. The phase of the TOSC clock after waking up from Power-save mode is essentially unpredictable, as it depends on the wake-up time. The recommended procedure for reading TCNT2 is thus as follows:
  1. Write any value to either of the registers OCR2x or TCCR2x.
  2. Wait for the corresponding Update Busy Flag to be cleared.
  3. Read TCNT2.
- During asynchronous operation, the synchronization of the Interrupt Flags for the asynchronous timer takes three processor cycles plus one timer cycle. The timer is therefore advanced by at least one before the processor can read the timer value causing the setting of the Interrupt Flag. The Output Compare pin is changed on the timer clock and is not synchronized to the processor clock.

20.9 Timer/Counter Prescaler

Figure 20-12. Prescaler for Timer/Counter2

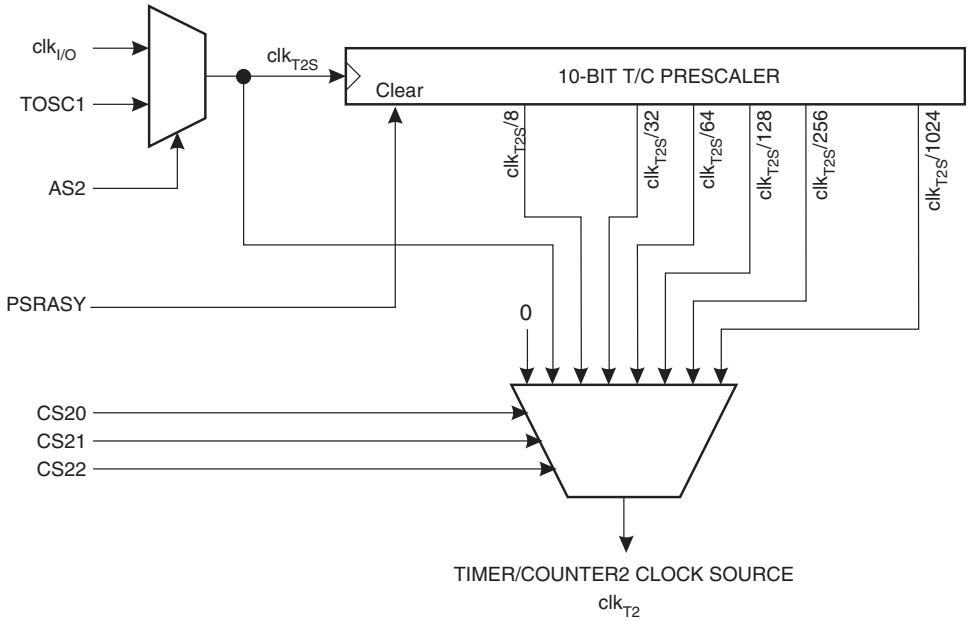

The clock source for Timer/Counter2 is named clk_{T2S}. clk_{T2S} is by default connected to the main system I/O clock clk_{IO}. By setting the AS2 bit in ASSR, Timer/Counter2 is asynchronously clocked from the TOSC1 pin. This enables use of Timer/Counter2 as a Real Time Counter (RTC). When AS2 is set, pins TOSC1 and TOSC2 are disconnected from Port C. A crystal can then be connected between the TOSC1 and TOSC2 pins to serve as an independent clock source for Timer/Counter2. The Oscillator is optimized for use with a 32.768kHz crystal. By setting the EXCLK bit in the ASSR, a 32kHz external clock can be applied. See "ASSR – Asynchronous Status Register" on page 187 for details.

For Timer/Counter2, the possible prescaled selections are: $clk_{T2S}/8$, $clk_{T2S}/32$, $clk_{T2S}/64$, $clk_{T2S}/128$, $clk_{T2S}/256$, and $clk_{T2S}/1024$. Additionally, clk_{T2S} as well as 0 (stop) may be selected. Setting the PSRASY bit in GTCCR resets the prescaler. This allows the user to operate with a predictable prescaler.

20.10 Register Description

20.10.1 TCCR2A –Timer/Counter Control Register A

Bit	7	6	5	4	3	2	1	0	
(0xB0)	COM2A1	COM2A0	COM2B1	COM2B0	–	–	WGM21	WGM20	TCCR2A
Read/Write	R/W	R/W	R/W	R/W	R	R	R/W	R/W	
Initial Value	0	0	0	0	0	0	0	0	

- **Bits 7:6 – COM2A1:0: Compare Match Output A Mode**

These bits control the Output Compare pin (OC2A) behavior. If one or both of the COM2A1:0 bits are set, the OC2A output overrides the normal port functionality of the I/O pin it is connected to. However, note that the Data Direction Register (DDR) bit corresponding to the OC2A pin must be set in order to enable the output driver.

When OC2A is connected to the pin, the function of the COM2A1:0 bits depends on the WGM22:0 bit setting. Table 20-2 shows the COM2A1:0 bit functionality when the WGM22:0 bits are set to a normal or CTC mode (non-PWM).

Table 20-2. Compare Output Mode, non-PWM Mode

COM2A1	COM2A0	Description
0	0	Normal port operation, OC2A disconnected
0	1	Toggle OC2A on Compare Match
1	0	Clear OC2A on Compare Match
1	1	Set OC2A on Compare Match

Table 20-3 shows the COM2A1:0 bit functionality when the WGM21:0 bits are set to fast PWM mode.

Table 20-3. Compare Output Mode, Fast PWM Mode(1)

COM2A1	COM2A0	Description
0	0	Normal port operation, OC2A disconnected
0	1	WGM22 = 0: Normal Port Operation, OC2A Disconnected WGM22 = 1: Toggle OC2A on Compare Match
1	0	Clear OC2A on Compare Match, set OC2A at BOTTOM (non-inverting mode)
1	1	Set OC2A on Compare Match, clear OC2A at BOTTOM (inverting mode)

Note: 1. A special case occurs when OCR2A equals TOP and COM2A1 is set. In this case, the Compare Match is ignored, but the set or clear is done at BOTTOM. See "Fast PWM Mode" on page 173 for more details.

Table 20-4 on page 183 shows the COM2A1:0 bit functionality when the WGM22:0 bits are set to phase correct PWM mode.

Table 20-4. Compare Output Mode, Phase Correct PWM Mode[1]

COM2A1	COM2A0	Description
0	0	Normal port operation, OC2A disconnected
0	1	WGM22 = 0: Normal Port Operation, OC2A Disconnected WGM22 = 1: Toggle OC2A on Compare Match
1	0	Clear OC2A on Compare Match when up-counting Set OC2A on Compare Match when down-counting
1	1	Set OC2A on Compare Match when up-counting Clear OC2A on Compare Match when down-counting

Note: 1. A special case occurs when OCR2A equals TOP and COM2A1 is set. In this case, the Compare Match is ignored, but the set or clear is done at TOP. See "Phase Correct PWM Mode" on page 173 for more details.

- **Bits 5:4 – COM2B1:0: Compare Match Output B Mode**

These bits control the Output Compare pin (OC2B) behavior. If one or both of the COM2B1:0 bits are set, the OC2B output overrides the normal port functionality of the I/O pin it is connected to. However, note that the Data Direction Register (DDR) bit corresponding to the OC2B pin must be set in order to enable the output driver.

When OC2B is connected to the pin, the function of the COM2B1:0 bits depends on the WGM22:0 bit setting. Table 20-5 shows the COM2B1:0 bit functionality when the WGM22:0 bits are set to a normal or CTC mode (non-PWM).

Table 20-5. Compare Output Mode, non-PWM Mode

COM2B1	COM2B0	Description
0	0	Normal port operation, OC2B disconnected
0	1	Toggle OC2B on Compare Match
1	0	Clear OC2B on Compare Match
1	1	Set OC2B on Compare Match

Table 20-6 shows the COM2B1:0 bit functionality when the WGM22:0 bits are set to fast PWM mode.

Table 20-6. Compare Output Mode, Fast PWM Mode[1]

COM2B1	COM2B0	Description
0	0	Normal port operation, OC2B disconnected
0	1	Reserved
1	0	Clear OC2B on Compare Match, set OC2B at BOTTOM (non-inverting mode)
1	1	Set OC2B on Compare Match, clear OC2B at BOTTOM (inverting mode)

Note: 1. A special case occurs when OCR2B equals TOP and COM2B1 is set. In this case, the Compare Match is ignored, but the set or clear is done at BOTTOM. See "Fast PWM Mode" on page 173 for more details.

Table 20-7 shows the COM2B1:0 bit functionality when the WGM22:0 bits are set to phase correct PWM mode.

Table 20-7. Compare Output Mode, Phase Correct PWM Mode[1]

COM2B1	COM2B0	Description
0	0	Normal port operation, OC2B disconnected
0	1	Reserved
1	0	Clear OC2B on Compare Match when up-counting Set OC2B on Compare Match when down-counting
1	1	Set OC2B on Compare Match when up-counting Clear OC2B on Compare Match when down-counting

Note: 1. A special case occurs when OCR2B equals TOP and COM2B1 is set. In this case, the Compare Match is ignored, but the set or clear is done at TOP. See "Phase Correct PWM Mode" on page 173 for more details.

- **Bits 3, 2 – Res: Reserved Bits**

These bits are reserved bits and will always read as zero.

- **Bits 1:0 – WGM21:0: Waveform Generation Mode**

Combined with the WGM22 bit found in the TCCR2B Register, these bits control the counting sequence of the counter, the source for maximum (TOP) counter value, and what type of waveform generation to be used, see Table 20-8. Modes of operation supported by the Timer/Counter unit are: Normal mode (counter), Clear Timer on Compare Match (CTC) mode, and two types of Pulse Width Modulation (PWM) modes (see "Modes of Operation" on page 171).

Table 20-8. Waveform Generation Mode Bit Description

Mode	WGM2	WGM1	WGM0	Timer/Counter Mode of Operation	TOP	Update of OCRx at	TOV Flag Set on[1][2]
0	0	0	0	Normal	0xFF	Immediate	MAX
1	0	0	1	PWM, Phase Correct	0xFF	TOP	BOTTOM
2	0	1	0	CTC	OCRA	Immediate	MAX
3	0	1	1	Fast PWM	0xFF	BOTTOM	MAX
4	1	0	0	Reserved	–	–	–
5	1	0	1	PWM, Phase Correct	OCRA	TOP	BOTTOM
6	1	1	0	Reserved	–	–	–
7	1	1	1	Fast PWM	OCRA	BOTTOM	TOP

Notes: 1. MAX = 0xFF.
2. BOTTOM= 0x00.

20.10.2 TCCR2B – Timer/Counter Control Register B

Bit	7	6	5	4	3	2	1	0	
(0xB1)	FOC2A	FOC2B	–	–	WGM22	CS22	CS21	CS20	TCCR2B
Read/Write	W	W	R	R	R/W	R/W	R/W	R/W	
Initial Value	0	0	0	0	0	0	0	0	

- **Bit 7 – FOC2A: Force Output Compare A**

The FOC2A bit is only active when the WGM bits specify a non-PWM mode.

However, for ensuring compatibility with future devices, this bit must be set to zero when TCCR2B is written when operating in PWM mode. When writing a logical one to the FOC2A bit, an immediate Compare Match is forced on the Waveform Generation unit. The OC2A output is changed according to its COM2A1:0 bits setting. Note that the FOC2A bit is implemented as a strobe. Therefore it is the value present in the COM2A1:0 bits that determines the effect of the forced compare.

A FOC2A strobe will not generate any interrupt, nor will it clear the timer in CTC mode using OCR2A as TOP.

The FOC2A bit is always read as zero.

- **Bit 6 – FOC2B: Force Output Compare B**

The FOC2B bit is only active when the WGM bits specify a non-PWM mode.

However, for ensuring compatibility with future devices, this bit must be set to zero when TCCR2B is written when operating in PWM mode. When writing a logical one to the FOC2B bit, an immediate Compare Match is forced on the Waveform Generation unit. The OC2B output is changed according to its COM2B1:0 bits setting. Note that the FOC2B bit is implemented as a strobe. Therefore it is the value present in the COM2B1:0 bits that determines the effect of the forced compare.

A FOC2B strobe will not generate any interrupt, nor will it clear the timer in CTC mode using OCR2B as TOP.

The FOC2B bit is always read as zero.

- **Bits 5:4 – Res: Reserved Bits**

These bits are reserved bits and will always read as zero.

- **Bit 3 – WGM22: Waveform Generation Mode**

See the description in the "TCCR2A –Timer/Counter Control Register A" on page 182.

- **Bit 2:0 – CS22:0: Clock Select**

The three Clock Select bits select the clock source to be used by the Timer/Counter, see Table 20-9.

Table 20-9. Clock Select Bit Description

CS22	CS21	CS20	Description
0	0	0	No clock source (Timer/Counter stopped)
0	0	1	clk_{T2S}/(No prescaling)
0	1	0	clk_{T2S}/8 (From prescaler)
0	1	1	clk_{T2S}/32 (From prescaler)
1	0	0	clk_{T2S}/64 (From prescaler)

Table 20-9. Clock Select Bit Description (Continued)

CS22	CS21	CS20	Description
1	0	1	clk_{T2S}/128 (From prescaler)
1	1	0	clk_{T2S}/256 (From prescaler)
1	1	1	clk_{T2S}/1024 (From prescaler)

If external pin modes are used for the Timer/Counter0, transitions on the T0 pin will clock the counter even if the pin is configured as an output. This feature allows software control of the counting.

20.10.3 TCNT2 – Timer/Counter Register

Bit	7	6	5	4	3	2	1	0	
(0xB2)	TCNT2[7:0]								TCNT2
Read/Write	R/W	R/W	R/W	R/W	R/W	R/W	R/W	R/W	
Initial Value	0	0	0	0	0	0	0	0	

The Timer/Counter Register gives direct access, both for read and write operations, to the Timer/Counter unit 8-bit counter. Writing to the TCNT2 Register blocks (removes) the Compare Match on the following timer clock. Modifying the counter (TCNT2) while the counter is running, introduces a risk of missing a Compare Match between TCNT2 and the OCR2x Registers.

20.10.4 OCR2A – Output Compare Register A

Bit	7	6	5	4	3	2	1	0	
(0xB3)	OCR2A[7:0]								OCR2A
Read/Write	R/W	R/W	R/W	R/W	R/W	R/W	R/W	R/W	
Initial Value	0	0	0	0	0	0	0	0	

The Output Compare Register A contains an 8-bit value that is continuously compared with the counter value (TCNT2). A match can be used to generate an Output Compare interrupt, or to generate a waveform output on the OC2A pin.

20.10.5 OCR2B – Output Compare Register B

Bit	7	6	5	4	3	2	1	0	
(0xB4)	OCR2B[7:0]								OCR2B
Read/Write	R/W	R/W	R/W	R/W	R/W	R/W	R/W	R/W	
Initial Value	0	0	0	0	0	0	0	0	

The Output Compare Register B contains an 8-bit value that is continuously compared with the counter value (TCNT2). A match can be used to generate an Output Compare interrupt, or to generate a waveform output on the OC2B pin.

20.10.6 ASSR – Asynchronous Status Register

Bit	7	6	5	4	3	2	1	0	
(0xB6)	–	EXCLK	AS2	TCN2UB	OCR2AUB	OCR2BUB	TCR2AUB	TCR2BUB	ASSR
Read/Write	R	R/W	R/W	R	R	R	R	R	
Initial Value	0	0	0	0	0	0	0	0	

- **Bit 6 – EXCLK: Enable External Clock Input**

When EXCLK is written to one, and asynchronous clock is selected, the external clock input buffer is enabled and an external clock can be input on Timer Oscillator 1 (TOSC1) pin instead of a 32kHz crystal. Writing to EXCLK should be done before asynchronous operation is selected. Note that the crystal Oscillator will only run when this bit is zero.

- **Bit 5 – AS2: Asynchronous Timer/Counter2**

When AS2 is written to zero, Timer/Counter2 is clocked from the I/O clock, $clk_{I/O}$. When AS2 is written to one, Timer/Counter2 is clocked from a crystal Oscillator connected to the Timer Oscillator 1 (TOSC1) pin. When the value of AS2 is changed, the contents of TCNT2, OCR2A, OCR2B, TCCR2A and TCCR2B might be corrupted.

- **Bit 4 – TCN2UB: Timer/Counter2 Update Busy**

When Timer/Counter2 operates asynchronously and TCNT2 is written, this bit becomes set. When TCNT2 has been updated from the temporary storage register, this bit is cleared by hardware. A logical zero in this bit indicates that TCNT2 is ready to be updated with a new value.

- **Bit 3 – OCR2AUB: Output Compare Register2 Update Busy**

When Timer/Counter2 operates asynchronously and OCR2A is written, this bit becomes set. When OCR2A has been updated from the temporary storage register, this bit is cleared by hardware. A logical zero in this bit indicates that OCR2A is ready to be updated with a new value.

- **Bit 2 – OCR2BUB: Output Compare Register2 Update Busy**

When Timer/Counter2 operates asynchronously and OCR2B is written, this bit becomes set. When OCR2B has been updated from the temporary storage register, this bit is cleared by hardware. A logical zero in this bit indicates that OCR2B is ready to be updated with a new value.

- **Bit 1 – TCR2AUB: Timer/Counter Control Register2 Update Busy**

When Timer/Counter2 operates asynchronously and TCCR2A is written, this bit becomes set. When TCCR2A has been updated from the temporary storage register, this bit is cleared by hardware. A logical zero in this bit indicates that TCCR2A is ready to be updated with a new value.

- **Bit 0 – TCR2BUB: Timer/Counter Control Register2 Update Busy**

When Timer/Counter2 operates asynchronously and TCCR2B is written, this bit becomes set. When TCCR2B has been updated from the temporary storage register, this bit is cleared by hardware. A logical zero in this bit indicates that TCCR2B is ready to be updated with a new value.

If a write is performed to any of the five Timer/Counter2 Registers while its update busy flag is set, the updated value might get corrupted and cause an unintentional interrupt to occur.

The mechanisms for reading TCNT2, OCR2A, OCR2B, TCCR2A and TCCR2B are different. When reading TCNT2, the actual timer value is read. When reading OCR2A, OCR2B, TCCR2A and TCCR2B the value in the temporary storage register is read.

20.10.7 TIMSK2 – Timer/Counter2 Interrupt Mask Register

Bit	7	6	5	4	3	2	1	0	
(0x70)	–	–	–	–	–	OCIE2B	OCIE2A	TOIE2	TIMSK2
Read/Write	R	R	R	R	R	R/W	R/W	R/W	
Initial Value	0	0	0	0	0	0	0	0	

- **Bit 2 – OCIE2B: Timer/Counter2 Output Compare Match B Interrupt Enable**

When the OCIE2B bit is written to one and the I-bit in the Status Register is set (one), the Timer/Counter2 Compare Match B interrupt is enabled. The corresponding interrupt is executed if a compare match in Timer/Counter2 occurs, that is, when the OCF2B bit is set in the Timer/Counter 2 Interrupt Flag Register – TIFR2.

- **Bit 1 – OCIE2A: Timer/Counter2 Output Compare Match A Interrupt Enable**

When the OCIE2A bit is written to one and the I-bit in the Status Register is set (one), the Timer/Counter2 Compare Match A interrupt is enabled. The corresponding interrupt is executed if a compare match in Timer/Counter2 occurs, that is, when the OCF2A bit is set in the Timer/Counter 2 Interrupt Flag Register – TIFR2.

- **Bit 0 – TOIE2: Timer/Counter2 Overflow Interrupt Enable**

When the TOIE2 bit is written to one and the I-bit in the Status Register is set (one), the Timer/Counter2 Overflow interrupt is enabled. The corresponding interrupt is executed if an overflow in Timer/Counter2 occurs, that is, when the TOV2 bit is set in the Timer/Counter2 Interrupt Flag Register – TIFR2.

20.10.8 TIFR2 – Timer/Counter2 Interrupt Flag Register

Bit	7	6	5	4	3	2	1	0	
0x17 (0x37)	–	–	–	–	–	OCF2B	OCF2A	TOV2	TIFR2
Read/Write	R	R	R	R	R	R/W	R/W	R/W	
Initial Value	0	0	0	0	0	0	0	0	

- **Bit 2 – OCF2B: Output Compare Flag 2 B**

The OCF2B bit is set (one) when a compare match occurs between the Timer/Counter2 and the data in OCR2B – Output Compare Register2. OCF2B is cleared by hardware when executing the corresponding interrupt handling vector. Alternatively, OCF2B is cleared by writing a logic one to the flag. When the I-bit in SREG, OCIE2B (Timer/Counter2 Compare match Interrupt Enable), and OCF2B are set (one), the Timer/Counter2 Compare match Interrupt is executed.

- **Bit 1 – OCF2A: Output Compare Flag 2 A**

The OCF2A bit is set (one) when a compare match occurs between the Timer/Counter2 and the data in OCR2A – Output Compare Register2. OCF2A is cleared by hardware when executing the corresponding interrupt handling vector. Alternatively, OCF2A is cleared by writing a logic one to the flag. When the I-bit in SREG, OCIE2A (Timer/Counter2 Compare match Interrupt Enable), and OCF2A are set (one), the Timer/Counter2 Compare match Interrupt is executed.

- **Bit 0 – TOV2: Timer/Counter2 Overflow Flag**

The TOV2 bit is set (one) when an overflow occurs in Timer/Counter2. TOV2 is cleared by hardware when executing the corresponding interrupt handling vector. Alternatively, TOV2 is cleared by writing a logic one to the flag. When the SREG I-bit, TOIE2A (Timer/Counter2 Overflow Interrupt Enable), and TOV2 are set (one), the Timer/Counter2 Overflow interrupt is executed. In PWM mode, this bit is set when Timer/Counter2 changes counting direction at 0x00.

20.10.9 GTCCR – General Timer/Counter Control Register

Bit	7	6	5	4	3	2	1	0	
0x23 (0x43)	**TSM**	**–**	**–**	**–**	**–**	**–**	**PSRASY**	**PSRSYNC**	**GTCCR**
Read/Write	R/W	R	R	R	R	R	R/W	R/W	
Initial Value	0	0	0	0	0	0	0	0	

- **Bit 1 – PSRASY: Prescaler Reset Timer/Counter2**

When this bit is one, the Timer/Counter2 prescaler will be reset. This bit is normally cleared immediately by hardware. If the bit is written when Timer/Counter2 is operating in asynchronous mode, the bit will remain one until the prescaler has been reset. The bit will not be cleared by hardware if the TSM bit is set. Refer to the description of the "Bit 7 – TSM: Timer/Counter Synchronization Mode" on page 166 for a description of the Timer/Counter Synchronization mode.

21. SPI – Serial Peripheral Interface

The Serial Peripheral Interface (SPI) allows high-speed synchronous data transfer between the ATmega640/1280/1281/2560/2561 and peripheral devices or between several AVR devices. The ATmega640/1280/1281/2560/2561 SPI includes the following features:

- **Full-duplex, Three-wire Synchronous Data Transfer**
- **Master or Slave Operation**
- **LSB First or MSB First Data Transfer**
- **Seven Programmable Bit Rates**
- **End of Transmission Interrupt Flag**
- **Write Collision Flag Protection**
- **Wake-up from Idle Mode**
- **Double Speed (CK/2) Master SPI Mode**

USART can also be used in Master SPI mode, see "USART in SPI Mode" on page 227.

The Power Reduction SPI bit, PRSPI, in "PRR0 – Power Reduction Register 0" on page 55 on page 50 must be written to zero to enable SPI module.

Figure 21-1. SPI Block Diagram[1]

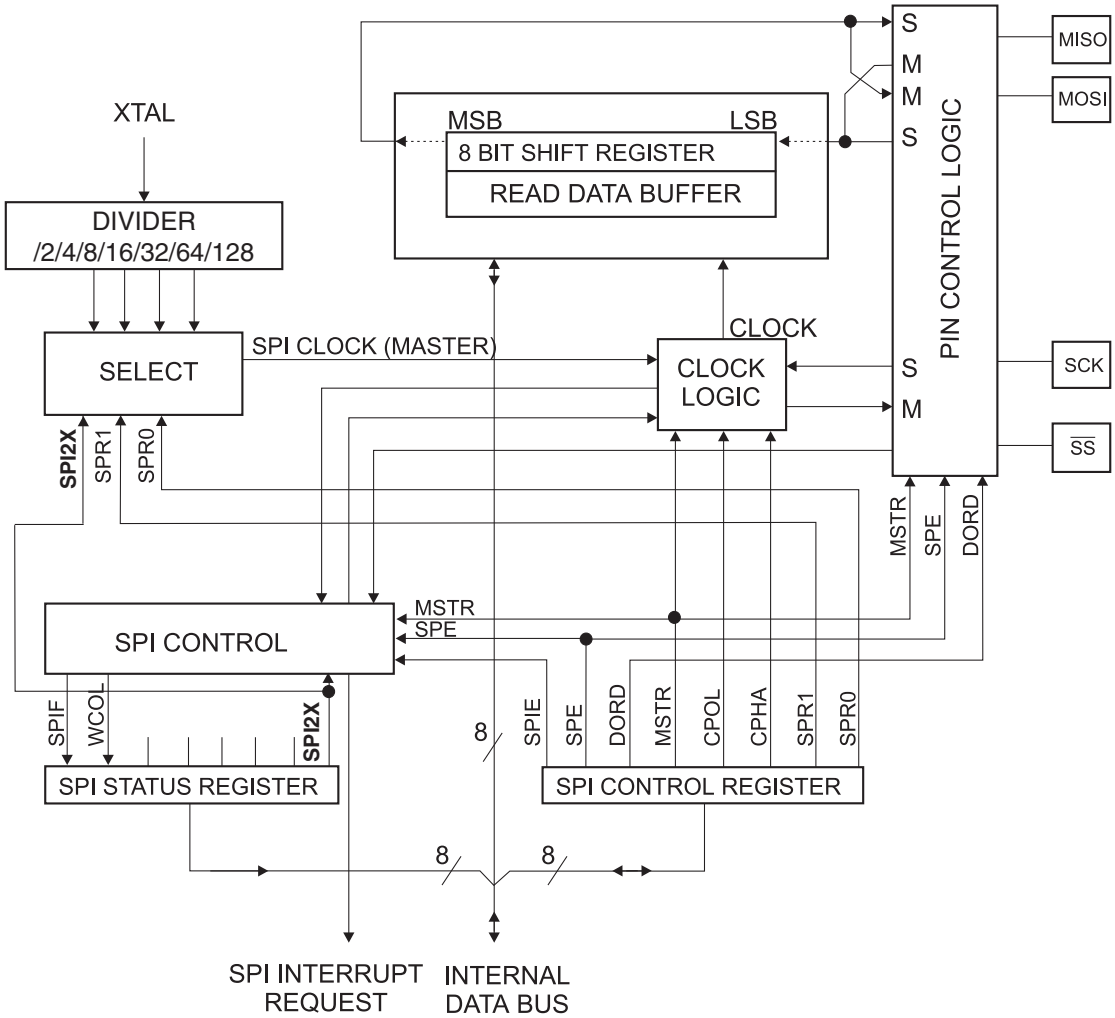

Note: 1. Refer to Figure 1-1 on page 2, and Table 13-6 on page 76 for SPI pin placement.

The interconnection between Master and Slave CPUs with SPI is shown in Figure 21-2. The system consists of two shift Registers, and a Master clock generator. The SPI Master initiates the communication cycle when pulling low the Slave Select $\overline{SS}$ pin of the desired Slave. Master and Slave prepare the data to be sent in their respective shift Registers, and the Master generates the required clock pulses on the SCK line to interchange data. Data is always shifted from Master to Slave on the Master Out – Slave In, MOSI, line, and from Slave to Master on the Master In – Slave Out, MISO, line. After each data packet, the Master will synchronize the Slave by pulling high the Slave Select, $\overline{SS}$, line.

When configured as a Master, the SPI interface has no automatic control of the $\overline{SS}$ line. This must be handled by user software before communication can start. When this is done, writing a byte to the SPI Data Register starts the SPI clock generator, and the hardware shifts the eight bits into the Slave. After shifting one byte, the SPI clock generator stops, setting the end of Transmission Flag (SPIF). If the SPI Interrupt Enable bit (SPIE) in the SPCR Register is set, an interrupt is requested. The Master may continue to shift the next byte by writing it into SPDR, or signal the end of packet by pulling high the Slave Select, $\overline{SS}$ line. The last incoming byte will be kept in the Buffer Register for later use.

When configured as a Slave, the SPI interface will remain sleeping with MISO tri-stated as long as the $\overline{SS}$ pin is driven high. In this state, software may update the contents of the SPI Data Register, SPDR, but the data will not be shifted out by incoming clock pulses on the SCK pin until the $\overline{SS}$ pin is driven low. As one byte has been completely shifted, the end of Transmission Flag, SPIF is set. If the SPI Interrupt Enable bit, SPIE, in the SPCR Register is set, an interrupt is requested. The Slave may continue to place new data to be sent into SPDR before reading the incoming data. The last incoming byte will be kept in the Buffer Register for later use.

Figure 21-2. SPI Master-slave Interconnection

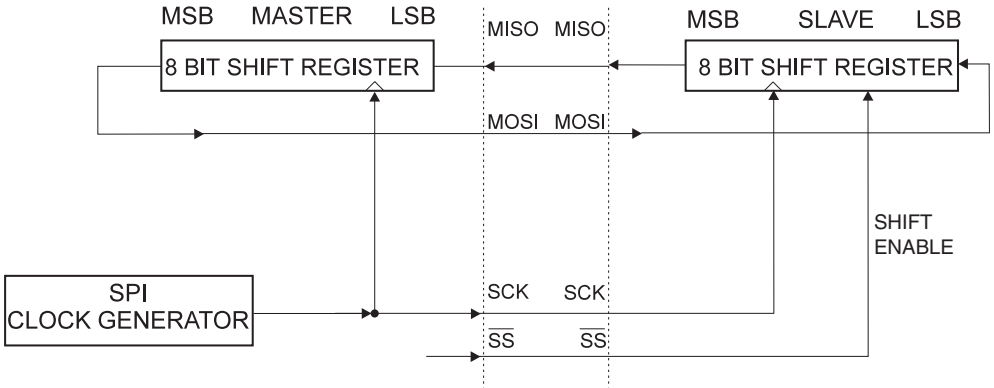

The system is single buffered in the transmit direction and double buffered in the receive direction. This means that bytes to be transmitted cannot be written to the SPI Data Register before the entire shift cycle is completed. When receiving data, however, a received character must be read from the SPI Data Register before the next character has been completely shifted in. Otherwise, the first byte is lost.

In SPI Slave mode, the control logic will sample the incoming signal of the SCK pin. To ensure correct sampling of the clock signal, the minimum low and high periods should be:

Low period: Longer than two CPU clock cycles.

High period: Longer than two CPU clock cycles.

When the SPI is enabled, the data direction of the MOSI, MISO, SCK, and $\overline{SS}$ pins is overridden according to Table 21-1. For more details on automatic port overrides, refer to "Alternate Port Functions" on page 72.

Table 21-1. SPI Pin Overrides[1]

Pin	Direction, Master SPI	Direction, Slave SPI
MOSI	User Defined	Input
MISO	Input	User Defined
SCK	User Defined	Input
$\overline{SS}$	User Defined	Input

Note: 1. See "Alternate Functions of Port B" on page 76 for a detailed description of how to define the direction of the user defined SPI pins.

The following code examples show how to initialize the SPI as a Master and how to perform a simple transmission. DDR_SPI in the examples must be replaced by the actual Data Direction Register controlling the SPI pins. DD_MOSI, DD_MISO and DD_SCK must be replaced by the actual data direction bits for these pins. For example, if MOSI is placed on pin PB5, replace DD_MOSI with DDB5 and DDR_SPI with DDRB.

Assembly Code Example[1]

```
SPI_MasterInit:
  ; Set MOSI and SCK output, all others input
  ldi   r17,(1<<DD_MOSI)|(1<<DD_SCK)
  out   DDR_SPI,r17
  ; Enable SPI, Master, set clock rate fck/16
  ldi   r17,(1<<SPE)|(1<<MSTR)|(1<<SPR0)
  out   SPCR,r17
  ret

SPI_MasterTransmit:
  ; Start transmission of data (r16)
  out   SPDR,r16
Wait_Transmit:
  ; Wait for transmission complete
  sbis SPSR,SPIF
  rjmp Wait_Transmit
  ret
```

C Code Example[1]

```
void SPI_MasterInit(void)
{
  /* Set MOSI and SCK output, all others input */
  DDR_SPI = (1<<DD_MOSI)|(1<<DD_SCK);
  /* Enable SPI, Master, set clock rate fck/16 */
  SPCR = (1<<SPE)|(1<<MSTR)|(1<<SPR0);
}

void SPI_MasterTransmit(char cData)
{
  /* Start transmission */
  SPDR = cData;
  /* Wait for transmission complete */
  while(!(SPSR & (1<<SPIF)))
    ;
}
```

Note: 1. See “About Code Examples” on page 10.

The following code examples show how to initialize the SPI as a Slave and how to perform a simple reception.

Assembly Code Example[1]

```
SPI_SlaveInit:
  ; Set MISO output, all others input
  ldi  r17,(1<<DD_MISO)
  out  DDR_SPI,r17
  ; Enable SPI
  ldi  r17,(1<<SPE)
  out  SPCR,r17
  ret

SPI_SlaveReceive:
  ; Wait for reception complete
  sbis SPSR,SPIF
  rjmp SPI_SlaveReceive
  ; Read received data and return
  in   r16,SPDR
  ret
```

C Code Example[1]

```
void SPI_SlaveInit(void)
{
  /* Set MISO output, all others input */
  DDR_SPI = (1<<DD_MISO);
  /* Enable SPI */
  SPCR = (1<<SPE);
}

char SPI_SlaveReceive(void)
{
  /* Wait for reception complete */
  while(!(SPSR & (1<<SPIF)))
    ;
  /* Return Data Register */
  return SPDR;
}
```

Note: 1. See “About Code Examples” on page 10.

21.1 $\overline{SS}$ Pin Functionality

21.1.1 Slave Mode

When the SPI is configured as a Slave, the Slave Select ($\overline{SS}$) pin is always input. When $\overline{SS}$ is held low, the SPI is activated, and MISO becomes an output if configured so by the user. All other pins are inputs. When $\overline{SS}$ is driven high, all pins are inputs, and the SPI is passive, which means that it will not receive incoming data. Note that the SPI logic will be reset once the $\overline{SS}$ pin is driven high.

The $\overline{SS}$ pin is useful for packet/byte synchronization to keep the slave bit counter synchronous with the master clock generator. When the $\overline{SS}$ pin is driven high, the SPI slave will immediately reset the send and receive logic, and drop any partially received data in the Shift Register.

21.1.2 Master Mode

When the SPI is configured as a Master (MSTR in SPCR is set), the user can determine the direction of the $\overline{SS}$ pin.

If $\overline{SS}$ is configured as an output, the pin is a general output pin which does not affect the SPI system. Typically, the pin will be driving the $\overline{SS}$ pin of the SPI Slave.

If $\overline{SS}$ is configured as an input, it must be held high to ensure Master SPI operation. If the $\overline{SS}$ pin is driven low by peripheral circuitry when the SPI is configured as a Master with the $\overline{SS}$ pin defined as an input, the SPI system interprets this as another master selecting the SPI as a slave and starting to send data to it. To avoid bus contention, the SPI system takes the following actions:

1. The MSTR bit in SPCR is cleared and the SPI system becomes a Slave. As a result of the SPI becoming a Slave, the MOSI and SCK pins become inputs.
2. The SPIF Flag in SPSR is set, and if the SPI interrupt is enabled, and the I-bit in SREG is set, the interrupt routine will be executed.

Thus, when interrupt-driven SPI transmission is used in Master mode, and there exists a possibility that $\overline{SS}$ is driven low, the interrupt should always check that the MSTR bit is still set. If the MSTR bit has been cleared by a slave select, it must be set by the user to re-enable SPI Master mode.

21.1.3 Data Modes

There are four combinations of SCK phase and polarity with respect to serial data, which are determined by control bits CPHA and CPOL. The SPI data transfer formats are shown in Figure 21-3 on page 196 and Figure 21-4 on page 196. Data bits are shifted out and latched in on opposite edges of the SCK signal, ensuring sufficient time for data signals to stabilize. This is clearly seen by summarizing Table 21-3 on page 197 and Table 21-4 on page 197 in Table 21-2.

Table 21-2. CPOL Functionality

	Leading Edge	Trailing Edge	SPI Mode
CPOL=0, CPHA=0	Sample (Rising)	Setup (Falling)	0
CPOL=0, CPHA=1	Setup (Rising)	Sample (Falling)	1
CPOL=1, CPHA=0	Sample (Falling)	Setup (Rising)	2
CPOL=1, CPHA=1	Setup (Falling)	Sample (Rising)	3

Figure 21-3. SPI Transfer Format with CPHA = 0

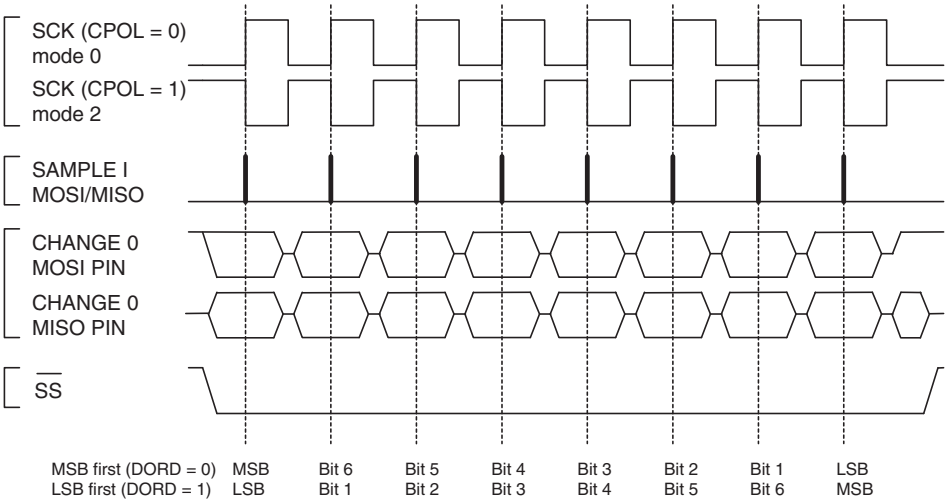

Figure 21-4. SPI Transfer Format with CPHA = 1

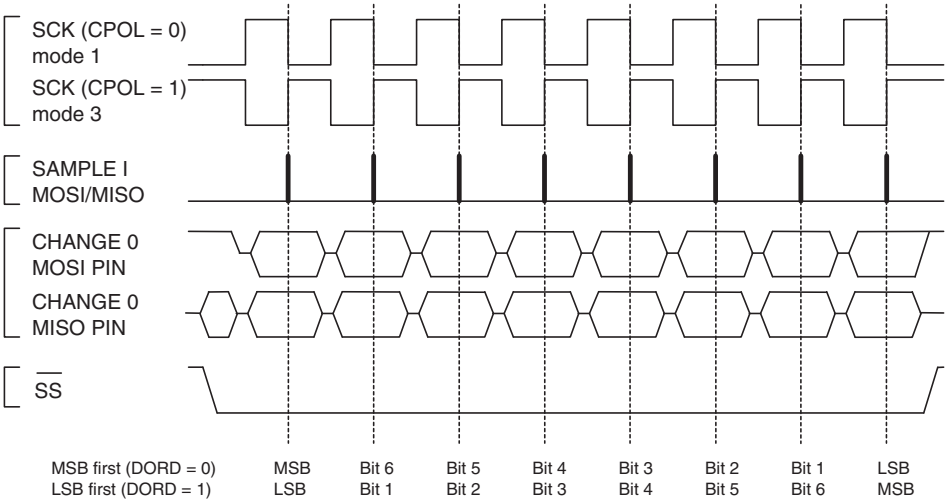

21.2 Register Description

21.2.1 SPCR – SPI Control Register

Bit	7	6	5	4	3	2	1	0	
0x2C (0x4C)	**SPIE**	**SPE**	**DORD**	**MSTR**	**CPOL**	**CPHA**	**SPR1**	**SPR0**	**SPCR**
Read/Write	R/W	R/W	R/W	R/W	R/W	R/W	R/W	R/W	
Initial Value	0	0	0	0	0	0	0	0	

- **Bit 7 – SPIE: SPI Interrupt Enable**

This bit causes the SPI interrupt to be executed if SPIF bit in the SPSR Register is set and the if the Global Interrupt Enable bit in SREG is set.

- **Bit 6 – SPE: SPI Enable**

When the SPE bit is written to one, the SPI is enabled. This bit must be set to enable any SPI operations.

- **Bit 5 – DORD: Data Order**

When the DORD bit is written to one, the LSB of the data word is transmitted first.

When the DORD bit is written to zero, the MSB of the data word is transmitted first.

- **Bit 4 – MSTR: Master/Slave Select**

This bit selects Master SPI mode when written to one, and Slave SPI mode when written logic zero. If $\overline{SS}$ is configured as an input and is driven low while MSTR is set, MSTR will be cleared, and SPIF in SPSR will become set. The user will then have to set MSTR to re-enable SPI Master mode.

- **Bit 3 – CPOL: Clock Polarity**

When this bit is written to one, SCK is high when idle. When CPOL is written to zero, SCK is low when idle. Refer to Figure 21-3 on page 196 and Figure 21-4 on page 196 for an example. The CPOL functionality is summarized in Table 21-3.

Table 21-3. CPOL Functionality

CPOL	Leading Edge	Trailing Edge
0	Rising	Falling
1	Falling	Rising

- **Bit 2 – CPHA: Clock Phase**

The settings of the Clock Phase bit (CPHA) determine if data is sampled on the leading (first) or trailing (last) edge of SCK. Refer to Figure 21-3 on page 196 and Figure 21-4 on page 196 for an example. The CPOL functionality is summarized in Table 21-4.

Table 21-4. CPHA Functionality

CPHA	Leading Edge	Trailing Edge
0	Sample	Setup
1	Setup	Sample

- **Bits 1, 0 – SPR1, SPR0: SPI Clock Rate Select 1 and 0**

These two bits control the SCK rate of the device configured as a Master. SPR1 and SPR0 have no effect on the Slave. The relationship between SCK and the Oscillator Clock frequency f_{osc} is shown in Table 21-5.

Table 21-5. Relationship Between SCK and the Oscillator Frequency

SPI2X	SPR1	SPR0	SCK Frequency
0	0	0	$f_{osc}/4$
0	0	1	$f_{osc}/16$
0	1	0	$f_{osc}/64$
0	1	1	$f_{osc}/128$
1	0	0	$f_{osc}/2$
1	0	1	$f_{osc}/8$
1	1	0	$f_{osc}/32$
1	1	1	$f_{osc}/64$

21.2.2 SPSR – SPI Status Register

Bit	7	6	5	4	3	2	1	0	
0x2D (0x4D)	SPIF	WCOL	–	–	–	–	–	SPI2X	SPSR
Read/Write	R	R	R	R	R	R	R	R/W	
Initial Value	0	0	0	0	0	0	0	0	

- **Bit 7 – SPIF: SPI Interrupt Flag**

When a serial transfer is complete, the SPIF Flag is set. An interrupt is generated if SPIE in SPCR is set and global interrupts are enabled. If $\overline{SS}$ is an input and is driven low when the SPI is in Master mode, this will also set the SPIF Flag. SPIF is cleared by hardware when executing the corresponding interrupt handling vector. Alternatively, the SPIF bit is cleared by first reading the SPI Status Register with SPIF set, then accessing the SPI Data Register (SPDR).

- **Bit 6 – WCOL: Write COLlision Flag**

The WCOL bit is set if the SPI Data Register (SPDR) is written during a data transfer. The WCOL bit (and the SPIF bit) are cleared by first reading the SPI Status Register with WCOL set, and then accessing the SPI Data Register.

- **Bit 5:1 – Res: Reserved Bits**

These bits are reserved bits and will always read as zero.

- **Bit 0 – SPI2X: Double SPI Speed Bit**

When this bit is written logic one the SPI speed (SCK Frequency) will be doubled when the SPI is in Master mode (see Table 21-5). This means that the minimum SCK period will be two CPU clock periods. When the SPI is configured as Slave, the SPI is only guaranteed to work at $f_{osc}/4$ or lower.

The SPI interface on the ATmega640/1280/1281/2560/2561 is also used for program memory and EEPROM downloading or uploading. See "Serial Downloading" on page 338 for serial programming and verification.

21.2.3 SPDR – SPI Data Register

Bit	7	6	5	4	3	2	1	0	
0x2E (0x4E)	**MSB**							**LSB**	**SPDR**
Read/Write	R/W	R/W	R/W	R/W	R/W	R/W	R/W	R/W	
Initial Value	X	X	X	X	X	X	X	X	Undefined

The SPI Data Register is a read/write register used for data transfer between the Register File and the SPI Shift Register. Writing to the register initiates data transmission. Reading the register causes the Shift Register Receive buffer to be read.

22. USART

22.1 Features

- **Full Duplex Operation (Independent Serial Receive and Transmit Registers)**
- **Asynchronous or Synchronous Operation**
- **Master or Slave Clocked Synchronous Operation**
- **High Resolution Baud Rate Generator**
- **Supports Serial Frames with 5, 6, 7, 8, or 9 Data Bits and 1 or 2 Stop Bits**
- **Odd or Even Parity Generation and Parity Check Supported by Hardware**
- **Data OverRun Detection**
- **Framing Error Detection**
- **Noise Filtering Includes False Start Bit Detection and Digital Low Pass Filter**
- **Three Separate Interrupts on TX Complete, TX Data Register Empty and RX Complete**
- **Multi-processor Communication Mode**
- **Double Speed Asynchronous Communication Mode**

22.2 Overview

The Universal Synchronous and Asynchronous serial Receiver and Transmitter (USART) is a highly flexible serial communication device.

The ATmega640/1280/2560 has four USART's, USART0, USART1, USART2, and USART3. The functionality for all four USART's is described below. USART0, USART1, USART2, and USART3 have different I/O registers as shown in "Register Summary" on page 399.

A simplified block diagram of the USART Transmitter is shown in Figure 22-1 on page 201. CPU accessible I/O Registers and I/O pins are shown in bold.

The Power Reducion USART0 bit, PRUSART0, in "PRR0 – Power Reduction Register 0" on page 55 must be disabled by writing a logical zero to it.

The Power Reducion USART1 bit, PRUSART1, in "PRR1 – Power Reduction Register 1" on page 56 must be disabled by writing a logical zero to it.

The Power Reducion USART2 bit, PRUSART2, in "PRR1 – Power Reduction Register 1" on page 56 must be disabled by writing a logical zero to it.

The Power Reducion USART3 bit, PRUSART3, in "PRR1 – Power Reduction Register 1" on page 56 must be disabled by writing a logical zero to it.

Figure 22-1. USART Block Diagram[1]

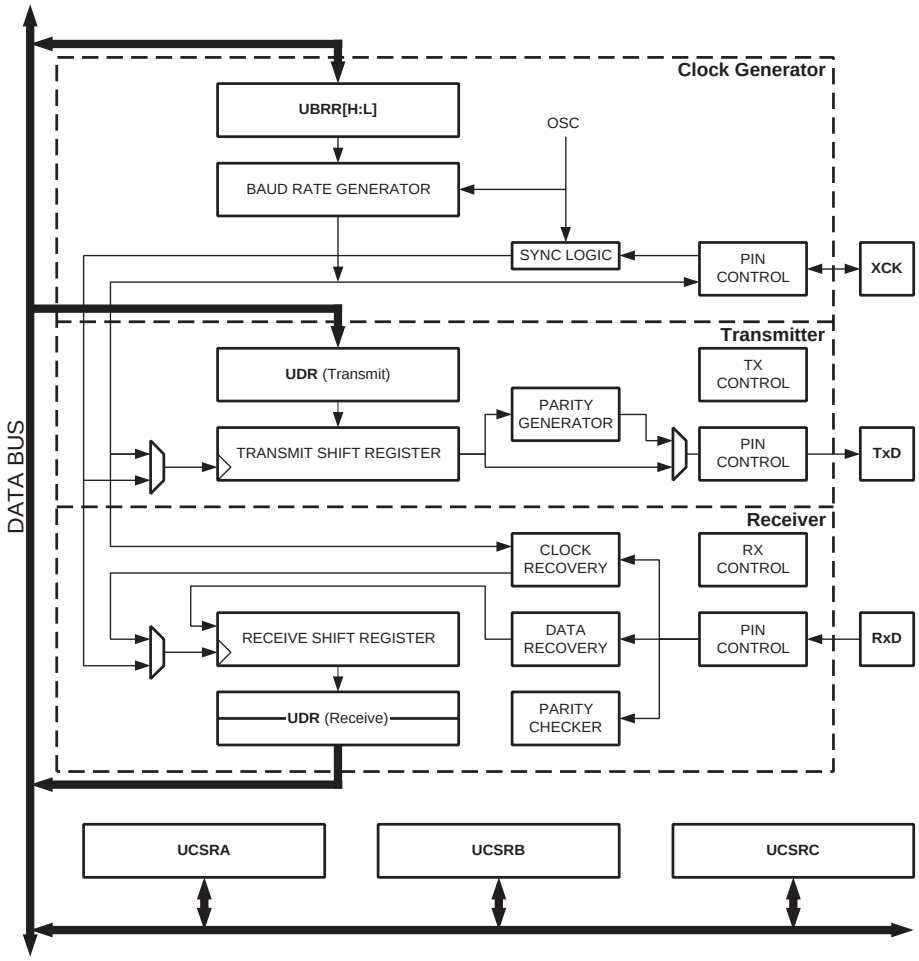

Note: 1. See Figure 1-1 on page 2, Figure 1-3 on page 4, Table 13-12 on page 80, Table 13-15 on page 82, Table 13-24 on page 88 and Table 13-27 on page 90 for USART pin placement.

The dashed boxes in the block diagram separate the three main parts of the USART (listed from the top): Clock Generator, Transmitter and Receiver. Control Registers are shared by all units. The Clock Generation logic consists of synchronization logic for external clock input used by synchronous slave operation, and the baud rate generator. The XCKn (Transfer Clock) pin is only used by synchronous transfer mode. The Transmitter consists of a single write buffer, a serial Shift Register, Parity Generator and Control logic for handling different serial frame formats. The write buffer allows a continuous transfer of data without any delay between frames. The Receiver is the most complex part of the USART module due to its clock and data recovery units. The recovery units are used for asynchronous data reception. In addition to the recovery units, the Receiver includes a Parity Checker, Control logic, a Shift Register and a two level receive buffer (UDRn). The Receiver supports the same frame formats as the Transmitter, and can detect Frame Error, Data OverRun and Parity Errors.

22.3 Clock Generation

The Clock Generation logic generates the base clock for the Transmitter and Receiver. The USARTn supports four modes of clock operation: Normal asynchronous, Double Speed asynchronous, Master synchronous and Slave synchronous mode. The UMSELn bit in USART Control and Status Register C (UCSRnC) selects between asynchronous and synchronous operation. Double Speed (asynchronous mode only) is controlled by the U2Xn found in the UCSRnA Register. When using synchronous mode (UMSELn = 1), the Data Direction Register for the XCKn pin (DDR_XCKn) controls whether the clock source is internal (Master mode) or external (Slave mode). The XCKn pin is only active when using synchronous mode.

Figure 22-2 shows a block diagram of the clock generation logic.

Figure 22-2. Clock Generation Logic, Block Diagram

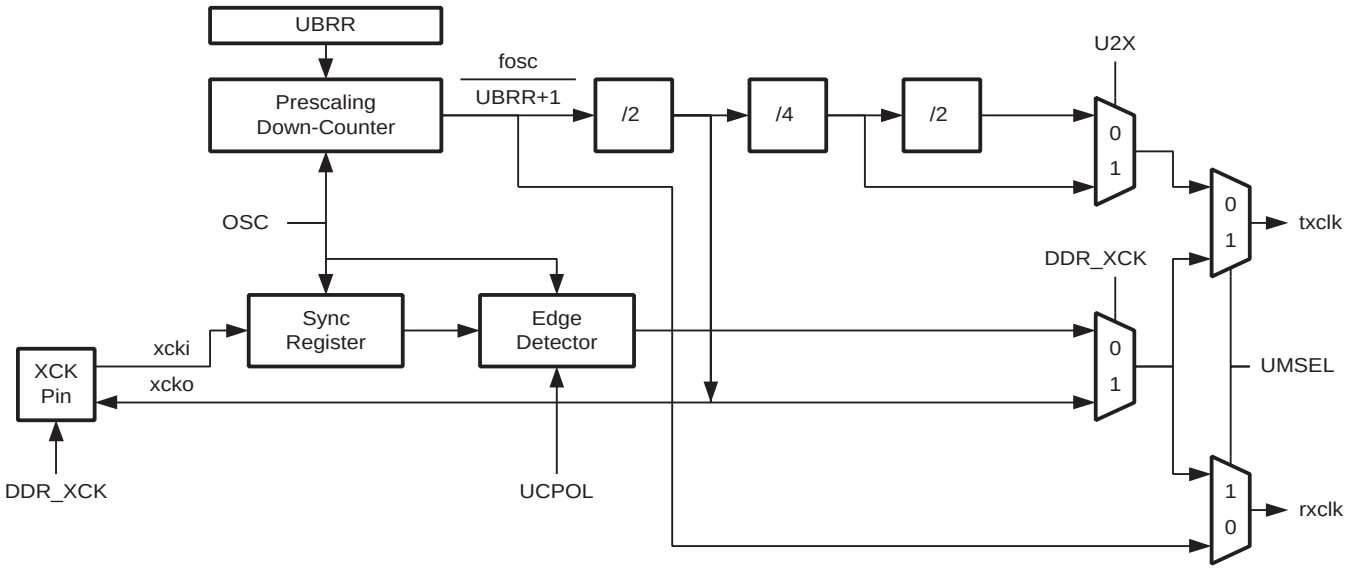

Signal description:

txclk	Transmitter clock (Internal Signal).
rxclk	Receiver base clock (Internal Signal).
xcki	Input from XCK pin (internal Signal). Used for synchronous slave operation.
xcko	Clock output to XCK pin (Internal Signal). Used for synchronous master operation.
f_{osc}	XTAL pin frequency (System Clock).

22.3.1 Internal Clock Generation – The Baud Rate Generator

Internal clock generation is used for the asynchronous and the synchronous master modes of operation. The description in this section refers to Figure 22-2.

The USART Baud Rate Register (UBRRn) and the down-counter connected to it function as a programmable prescaler or baud rate generator. The down-counter, running at system clock (f_{osc}), is loaded with the UBRRn value each time the counter has counted down to zero or when the UBRRLn Register is written. A clock is generated each time the counter reaches zero. This clock is the baud rate generator clock output (= f_{osc}/(UBRRn+1)). The Transmitter divides the baud rate generator clock output by 2, 8, or 16 depending on mode. The baud rate generator output is used directly by the Receiver's clock and data recovery units. However, the recovery units use a state machine that uses 2, 8 or 16 states depending on mode set by the state of the UMSELn, U2Xn and DDR_XCKn bits.

Table 22-1 on page 203 contains equations for calculating the baud rate (in bits per second) and for calculating the UBRRn value for each mode of operation using an internally generated clock source.

Table 22-1. Equations for Calculating Baud Rate Register Setting

Operating Mode	Equation for Calculating Baud Rate[1]	Equation for Calculating UBRR Value
Asynchronous Normal mode (U2Xn = 0)	$BAUD = \frac{f_{OSC}}{16(\boldsymbol{UBRR}n + 1)}$	$\boldsymbol{UBRR}n = \frac{f_{OSC}}{16BAUD} - 1$
Asynchronous Double Speed mode (U2Xn = 1)	$BAUD = \frac{f_{OSC}}{8(\boldsymbol{UBRR}n + 1)}$	$\boldsymbol{UBRR}n = \frac{f_{OSC}}{8BAUD} - 1$
Synchronous Master mode	$BAUD = \frac{f_{OSC}}{2(\boldsymbol{UBRR}n + 1)}$	$\boldsymbol{UBRR}n = \frac{f_{OSC}}{2BAUD} - 1$

Note: 1. The baud rate is defined to be the transfer rate in bit per second (bps).

BAUD Baud rate (in bits per second, bps).

f_{osc} System Oscillator clock frequency.

UBRRn Contents of the UBRRHn and UBRRLn Registers, (0-4095).

Some examples of UBRRn values for some system clock frequencies are found in Table 22-9 on page 223.

22.3.2 Double Speed Operation (U2Xn)

The transfer rate can be doubled by setting the U2Xn bit in UCSRnA. Setting this bit only has effect for the asynchronous operation. Set this bit to zero when using synchronous operation.

Setting this bit will reduce the divisor of the baud rate divider from 16 to 8, effectively doubling the transfer rate for asynchronous communication. Note however that the Receiver will in this case only use half the number of samples (reduced from 16 to 8) for data sampling and clock recovery, and therefore a more accurate baud rate setting and system clock are required when this mode is used. For the Transmitter, there are no downsides.

22.3.3 External Clock

External clocking is used by the synchronous slave modes of operation. The description in this section refers to Figure 22-2 on page 202 for details.

External clock input from the XCKn pin is sampled by a synchronization register to minimize the chance of metastability. The output from the synchronization register must then pass through an edge detector before it can be used by the Transmitter and Receiver. This process introduces a two CPU clock period delay and therefore the maximum external XCKn clock frequency is limited by the following equation:

$$f_{XCK} < \frac{f_{OSC}}{4}$$

Note that f_{osc} depends on the stability of the system clock source. It is therefore recommended to add some margin to avoid possible loss of data due to frequency variations.

22.3.4 Synchronous Clock Operation

When synchronous mode is used (UMSELn = 1), the XCKn pin will be used as either clock input (Slave) or clock output (Master). The dependency between the clock edges and data sampling or data change is the same. The basic principle is that data input (on RxDn) is sampled at the opposite XCKn clock edge of the edge the data output (TxDn) is changed.

Figure 22-3. Synchronous Mode XCKn Timing.

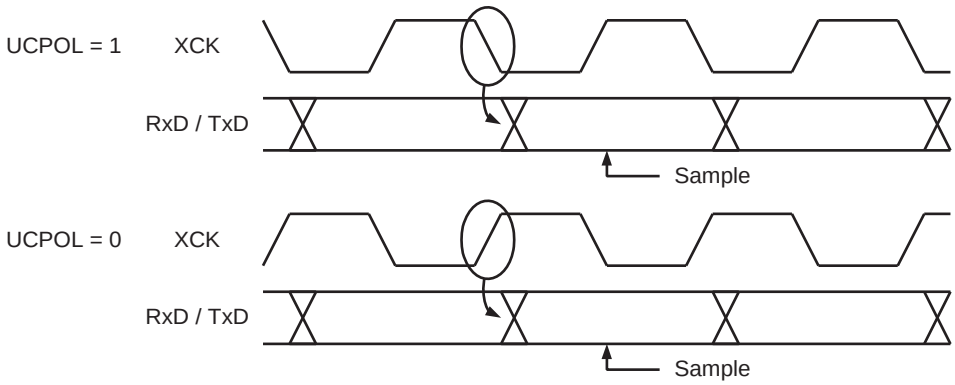

The UCPOLn bit UCRSC selects which XCKn clock edge is used for data sampling and which is used for data change. As Figure 22-3 shows, when UCPOLn is zero the data will be changed at rising XCKn edge and sampled at falling XCKn edge. If UCPOLn is set, the data will be changed at falling XCKn edge and sampled at rising XCKn edge.

22.4 Frame Formats

A serial frame is defined to be one character of data bits with synchronization bits (start and stop bits), and optionally a parity bit for error checking. The USART accepts all 30 combinations of the following as valid frame formats:

- 1 start bit
- 5, 6, 7, 8, or 9 data bits
- no, even or odd parity bit
- 1 or 2 stop bits

A frame starts with the start bit followed by the least significant data bit. Then the next data bits, up to a total of nine, are succeeding, ending with the most significant bit. If enabled, the parity bit is inserted after the data bits, before the stop bits. When a complete frame is transmitted, it can be directly followed by a new frame, or the communication line can be set to an idle (high) state. Figure 22-4 illustrates the possible combinations of the frame formats. Bits inside brackets are optional.

Figure 22-4. Frame Formats

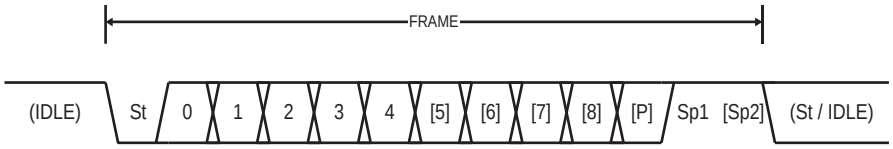

St	Start bit, always low.
(n)	Data bits (0 to 8).
P	Parity bit. Can be odd or even.
Sp	Stop bit, always high.
IDLE	No transfers on the communication line (RxDn or TxDn). An IDLE line must be high.

The frame format used by the USART is set by the UCSZn2:0, UPMn1:0 and USBSn bits in UCSRnB and UCSRnC. The Receiver and Transmitter use the same setting. Note that changing the setting of any of these bits will corrupt all ongoing communication for both the Receiver and Transmitter.

The USART Character SiZe (UCSZn2:0) bits select the number of data bits in the frame. The USART Parity mode (UPMn1:0) bits enable and set the type of parity bit. The selection between one or two stop bits is done by the USART Stop Bit Select (USBSn) bit. The Receiver ignores the second stop bit. An FE (Frame Error) will therefore only be detected in the cases where the first stop bit is zero.

22.4.1 Parity Bit Calculation

The parity bit is calculated by doing an exclusive-or of all the data bits. If odd parity is used, the result of the exclusive or is inverted. The parity bit is located between the last data bit and first stop bit of a serial frame. The relation between the parity bit and data bits is as follows:

$$P_{even} = d_{n-1} \oplus \ldots \oplus d_3 \oplus d_2 \oplus d_1 \oplus d_0 \oplus 0$$
$$P_{odd} = d_{n-1} \oplus \ldots \oplus d_3 \oplus d_2 \oplus d_1 \oplus d_0 \oplus 1$$

P_{even}	Parity bit using even parity.
P^{odd}	Parity bit using odd parity.
d_n	Data bit n of the character.

22.5 USART Initialization

The USART has to be initialized before any communication can take place. The initialization process normally consists of setting the baud rate, setting frame format and enabling the Transmitter or the Receiver depending on the usage. For interrupt driven USART operation, the Global Interrupt Flag should be cleared (and interrupts globally disabled) when doing the initialization.

Before doing a re-initialization with changed baud rate or frame format, be sure that there are no ongoing transmissions during the period the registers are changed. The TXCn Flag can be used to check that the Transmitter has completed all transfers, and the RXC Flag can be used to check that there are no unread data in the receive buffer. Note that the TXCn Flag must be cleared before each transmission (before UDRn is written) if it is used for this purpose.

The following simple USART initialization code examples show one assembly and one C function that are equal in functionality. The examples assume asynchronous operation using polling (no interrupts enabled) and a fixed frame format. The baud rate is given as a function parameter. For the assembly code, the baud rate parameter is assumed to be stored in the r17:r16 Registers.

Assembly Code Example[1]

```
USART_Init:
  ; Set baud rate
  sts  UBRRnH, r17
  sts  UBRRnL, r16
  ldi  r16, (1<<U2Xn)
  sts  UCRnA, r16
  ; Enable receiver and transmitter
  ldi  r16, (1<<RXENn)|(1<<TXENn)
  sts UCSRnB,r16
  ; Set frame format: 8data, 1stop bit
  ldi  r16, (2<<UMSELn)|(3<<UCSZn0)
  sts  UCSRnC,r16
  ret
```

C Code Example[1]

```
#define FOSC 1843200// Clock Speed
#define BAUD 9600
#define (MYUBRR FOSC/16/BAUD-1)
void main( void )
{...
USART_Init ( MYUBRR );
...} // main
void USART_Init( unsigned int ubrr){
/* Set baud rate */
UBRRH = (unsigned char)(ubrr>>8);
UBRRL = (unsigned char)ubrr;
/* Enable receiver and transmitter */
UCSRB = (1<<RXEN)|(1<<TXEN);
/* Set frame format: 8data, 2stop bit */
UCSRC = (1<<USBS)|(3<<UCSZ0);
} // USART_Init
```

Note: 1. See “About Code Examples” on page 10.

More advanced initialization routines can be made that include frame format as parameters, disable interrupts and so on. However, many applications use a fixed setting of the baud and control registers, and for these types of applications the initialization code can be placed directly in the main routine, or be combined with initialization code for other I/O modules.

22.6 Data Transmission – The USART Transmitter

The USART Transmitter is enabled by setting the *Transmit Enable* (TXEN) bit in the UCSRnB Register. When the Transmitter is enabled, the normal port operation of the TxDn pin is overridden by the USART and given the function as the Transmitter's serial output. The baud rate, mode of operation and frame format must be set up once before doing any transmissions. If synchronous operation is used, the clock on the XCKn pin will be overridden and used as transmission clock.

22.6.1 Sending Frames with 5 to 8 Data Bit

A data transmission is initiated by loading the transmit buffer with the data to be transmitted. The CPU can load the transmit buffer by writing to the UDRn I/O location. The buffered data in the transmit buffer will be moved to the Shift Register when the Shift Register is ready to send a new frame. The Shift Register is loaded with new data if it is in idle state (no ongoing transmission) or immediately after the last stop bit of the previous frame is transmitted. When the Shift Register is loaded with new data, it will transfer one complete frame at the rate given by the Baud Register, U2Xn bit or by XCKn depending on mode of operation.

The following code examples show a simple USART transmit function based on polling of the *Data Register Empty* (UDREn) Flag. When using frames with less than eight bits, the most significant bits written to the UDRn are ignored. The USART has to be initialized before the function can be used. For the assembly code, the data to be sent is assumed to be stored in Register R16.

Assembly Code Example[(1)]

```
USART_Transmit:
  ; Wait for empty transmit buffer
  lds  r17, UCSRnA
  sbrs r17, UDREn
  rjmp USART_Transmit
  ; Put data (r16) into buffer, sends the data
  sts  UDRn,r16
  ret
```

C Code Example[(1)]

```
void USART_Transmit( unsigned char data )
{
  /* Wait for empty transmit buffer */
  while ( !( UCSRnA & (1<<UDREn)) )
       ;
  /* Put data into buffer, sends the data */
  UDRn = data;
}
```

Note: 1. See "About Code Examples" on page 10.

The function simply waits for the transmit buffer to be empty by checking the UDREn Flag, before loading it with new data to be transmitted. If the Data Register Empty interrupt is utilized, the interrupt routine writes the data into the buffer.

22.6.2 Sending Frames with 9 Data Bit

If 9-bit characters are used (UCSZn = 7), the ninth bit must be written to the TXB8 bit in UCSRnB before the low byte of the character is written to UDRn. The following code examples show a transmit function that handles 9-bit characters. For the assembly code, the data to be sent is assumed to be stored in registers R17:R16.

Assembly Code Example[(1)(2)]

```
USART_Transmit:
  ; Wait for empty transmit buffer
  sbis UCSRnA,UDREn
  rjmp USART_Transmit
  ; Copy 9th bit from r17 to TXB8
  cbi  UCSRnB,TXB8
  sbrc r17,0
  sbi  UCSRnB,TXB8
  ; Put LSB data (r16) into buffer, sends the data
  sts UDRn,r16
  ret
```

C Code Example[(1)(2)]

```
void USART_Transmit( unsigned int data )
{
  /* Wait for empty transmit buffer */
  while ( !( UCSRnA & (1<<UDREn))) )
        ;
  /* Copy 9th bit to TXB8 */
  UCSRnB &= ~(1<<TXB8);
  if ( data & 0x0100 )
    UCSRnB |= (1<<TXB8);
  /* Put data into buffer, sends the data */
  UDRn = data;
}
```

Notes: 1. These transmit functions are written to be general functions. They can be optimized if the contents of the UCSRnB is static. For example, only the TXB8 bit of the UCSRnB Register is used after initialization.
2. See “About Code Examples” on page 10.

The ninth bit can be used for indicating an address frame when using multi processor communication mode or for other protocol handling as for example synchronization.

22.6.3 Transmitter Flags and Interrupts

The USART Transmitter has two flags that indicate its state: USART Data Register Empty (UDREn) and Transmit Complete (TXCn). Both flags can be used for generating interrupts.

The Data Register Empty (UDREn) Flag indicates whether the transmit buffer is ready to receive new data. This bit is set when the transmit buffer is empty, and cleared when the transmit buffer contains data to be transmitted that has not yet been moved into the Shift Register. For compatibility with future devices, always write this bit to zero when writing the UCSRnA Register.

When the Data Register Empty Interrupt Enable (UDRIEn) bit in UCSRnB is written to one, the USART Data Register Empty Interrupt will be executed as long as UDREn is set (provided that global interrupts are enabled).

UDREn is cleared by writing UDRn. When interrupt-driven data transmission is used, the Data Register Empty interrupt routine must either write new data to UDRn in order to clear UDREn or disable the Data Register Empty interrupt, otherwise a new interrupt will occur once the interrupt routine terminates.

The Transmit Complete (TXCn) Flag bit is set one when the entire frame in the Transmit Shift Register has been shifted out and there are no new data currently present in the transmit buffer. The TXCn Flag bit is automatically cleared when a transmit complete interrupt is executed, or it can be cleared by writing a one to its bit location. The TXCn Flag is useful in half-duplex communication interfaces (like the RS-485 standard), where a transmitting application must enter receive mode and free the communication bus immediately after completing the transmission.

When the Transmit Compete Interrupt Enable (TXCIEn) bit in UCSRnB is set, the USART Transmit Complete Interrupt will be executed when the TXCn Flag becomes set (provided that global interrupts are enabled). When the transmit complete interrupt is used, the interrupt handling routine does not have to clear the TXCn Flag, this is done automatically when the interrupt is executed.

22.6.4 Parity Generator

The Parity Generator calculates the parity bit for the serial frame data. When parity bit is enabled (UPMn1 = 1), the transmitter control logic inserts the parity bit between the last data bit and the first stop bit of the frame that is sent.

22.6.5 Disabling the Transmitter

The disabling of the Transmitter (setting the TXEN to zero) will not become effective until ongoing and pending transmissions are completed, that is, when the Transmit Shift Register and Transmit Buffer Register do not contain data to be transmitted. When disabled, the Transmitter will no longer override the TxDn pin.

22.7 Data Reception – The USART Receiver

The USART Receiver is enabled by writing the Receive Enable (RXENn) bit in the UCSRnB Register to one. When the Receiver is enabled, the normal pin operation of the RxDn pin is overridden by the USART and given the function as the Receiver's serial input. The baud rate, mode of operation and frame format must be set up once before any serial reception can be done. If synchronous operation is used, the clock on the XCKn pin will be used as transfer clock.

22.7.1 Receiving Frames with 5 to 8 Data Bits

The Receiver starts data reception when it detects a valid start bit. Each bit that follows the start bit will be sampled at the baud rate or XCKn clock, and shifted into the Receive Shift Register until the first stop bit of a frame is received. A second stop bit will be ignored by the Receiver. When the first stop bit is received, that is, a complete serial frame is present in the Receive Shift Register, the contents of the Shift Register will be moved into the receive buffer. The receive buffer can then be read by reading the UDRn I/O location.

The following code example shows a simple USART receive function based on polling of the Receive Complete (RXCn) Flag. When using frames with less than eight bits the most significant bits of the data read from the UDRn will be masked to zero. The USART has to be initialized before the function can be used.

Assembly Code Example[1]

```
USART_Receive:
  ; Wait for data to be received
  lds  r17, UCSRnA
  sbrs r17, RXCn
  rjmp USART_Receive
  ; Get and return received data from buffer
  lds  r16, UDRn
  ret
```

C Code Example[1]

```
unsigned char USART_Receive( void )
{
  /* Wait for data to be received */
  while ( !(UCSRnA & (1<<RXCn)) )
        ;
  /* Get and return received data from buffer */
  return UDRn;
}
```

Note: 1. See “About Code Examples” on page 10.

The function simply waits for data to be present in the receive buffer by checking the RXCn Flag, before reading the buffer and returning the value.

22.7.2 Receiving Frames with 9 Data Bits

If 9-bit characters are used (UCSZn=7) the ninth bit must be read from the RXB8n bit in UCSRnB **before** reading the low bits from the UDRn. This rule applies to the FEn, DORn and UPEn Status Flags as well. Read status from UCSRnA, then data from UDRn. Reading the UDRn I/O location will change the state of the receive buffer FIFO and consequently the TXB8n, FEn, DORn and UPEn bits, which all are stored in the FIFO, will change.

The following code example shows a simple USART receive function that handles both nine bit characters and the status bits.

Assembly Code Example[1]

```
USART_Receive:
  ; Wait for data to be received
  lds  r17, UCSRnA
  sbrs r17, RXCn
  rjmp USART_Receive
  ; Get status and 9th bit, then data from buffer
  lds  r18, UCSRnA
  lds  r17, UCSRnB
  lds  r16, UDRn
  ; If error, return -1
  andi r18,(1<<FEn)|(1<<DORn)|(1<<UPEn)
  breq USART_ReceiveNoError
  ldi  r17, HIGH(-1)
  ldi  r16, LOW(-1)
USART_ReceiveNoError:
  ; Filter the 9th bit, then return
  lsr  r17
  andi r17, 0x01
  ret
```

C Code Example[1]

```
unsigned int USART_Receive( void )
{
  unsigned char status, resh, resl;
  /* Wait for data to be received */
  while ( !(UCSRnA & (1<<RXCn)) )
       ;
  /* Get status and 9th bit, then data */
  /* from buffer */
  status = UCSRnA;
  resh = UCSRnB;
  resl = UDRn;
  /* If error, return -1 */
  if ( status & (1<<FEn)|(1<<DORn)|(1<<UPEn) )
    return -1;
  /* Filter the 9th bit, then return */
  resh = (resh >> 1) & 0x01;
  return ((resh << 8) | resl);
}
```

Note: 1. See “About Code Examples” on page 10.

The receive function example reads all the I/O Registers into the Register File before any computation is done. This gives an optimal receive buffer utilization since the buffer location read will be free to accept new data as early as possible.

22.7.3 Receive Compete Flag and Interrupt

The USART Receiver has one flag that indicates the Receiver state.

The Receive Complete (RXCn) Flag indicates if there are unread data present in the receive buffer. This flag is one when unread data exist in the receive buffer, and zero when the receive buffer is empty (that is, does not contain any unread data). If the Receiver is disabled (RXENn = 0), the receive buffer will be flushed and consequently the RXCn bit will become zero.

When the Receive Complete Interrupt Enable (RXCIEn) in UCSRnB is set, the USART Receive Complete interrupt will be executed as long as the RXCn Flag is set (provided that global interrupts are enabled). When interrupt-driven data reception is used, the receive complete routine must read the received data from UDRn in order to clear the RXCn Flag, otherwise a new interrupt will occur once the interrupt routine terminates.

22.7.4 Receiver Error Flags

The USART Receiver has three Error Flags: Frame Error (FEn), Data OverRun (DORn) and Parity Error (UPEn). All can be accessed by reading UCSRnA. Common for the Error Flags is that they are located in the receive buffer together with the frame for which they indicate the error status. Due to the buffering of the Error Flags, the UCSRnA must be read before the receive buffer (UDRn), since reading the UDRn I/O location changes the buffer read location. Another equality for the Error Flags is that they can not be altered by software doing a write to the flag location. However, all flags must be set to zero when the UCSRnA is written for upward compatibility of future USART implementations. None of the Error Flags can generate interrupts.

The Frame Error (FEn) Flag indicates the state of the first stop bit of the next readable frame stored in the receive buffer. The FEn Flag is zero when the stop bit was correctly read (as one), and the FEn Flag will be one when the stop bit was incorrect (zero). This flag can be used for detecting out-of-sync conditions, detecting break conditions and protocol handling. The FEn Flag is not affected by the setting of the USBSn bit in UCSRnC since the Receiver ignores all, except for the first, stop bits. For compatibility with future devices, always set this bit to zero when writing to UCSRnA.

The Data OverRun (DORn) Flag indicates data loss due to a receiver buffer full condition. A Data OverRun occurs when the receive buffer is full (two characters), it is a new character waiting in the Receive Shift Register, and a new start bit is detected. If the DORn Flag is set there was one or more serial frame lost between the frame last read from UDRn, and the next frame read from UDRn. For compatibility with future devices, always write this bit to zero when writing to UCSRnA. The DORn Flag is cleared when the frame received was successfully moved from the Shift Register to the receive buffer.

The Parity Error (UPEn) Flag indicates that the next frame in the receive buffer had a Parity Error when received. If Parity Check is not enabled the UPEn bit will always be read zero. For compatibility with future devices, always set this bit to zero when writing to UCSRnA. For more details see “Parity Bit Calculation” on page 205 and “Parity Checker” .

22.7.5 Parity Checker

The Parity Checker is active when the high USART Parity mode (UPMn1) bit is set. Type of Parity Check to be performed (odd or even) is selected by the UPMn0 bit. When enabled, the Parity Checker calculates the parity of the data bits in incoming frames and compares the result with the parity bit from the serial frame. The result of the check is stored in the receive buffer together with the received data and stop bits. The Parity Error (UPEn) Flag can then be read by software to check if the frame had a Parity Error.

The UPEn bit is set if the next character that can be read from the receive buffer had a Parity Error when received and the Parity Checking was enabled at that point (UPMn1 = 1). This bit is valid until the receive buffer (UDRn) is read.

22.7.6 Disabling the Receiver

In contrast to the Transmitter, disabling of the Receiver will be immediate. Data from ongoing receptions will therefore be lost. When disabled (that is, the RXENn is set to zero) the Receiver will no longer override the normal function of the RxDn port pin. The Receiver buffer FIFO will be flushed when the Receiver is disabled. Remaining data in the buffer will be lost.

22.7.7 Flushing the Receive Buffer

The receiver buffer FIFO will be flushed when the Receiver is disabled, that is, the buffer will be emptied of its contents. Unread data will be lost. If the buffer has to be flushed during normal operation, due to for instance an error condition, read the UDRn I/O location until the RXCn Flag is cleared. The following code example shows how to flush the receive buffer.

Assembly Code Example[1]

```
USART_Flush:
  sbis UCSRnA, RXCn
  ret
  in   r16, UDRn
  rjmp USART_Flush
```

C Code Example[1]

```
void USART_Flush( void )
{
  unsigned char dummy;
  while ( UCSRnA & (1<<RXCn) ) dummy = UDRn;
}
```

Note: 1. See “About Code Examples” on page 10.

22.8 Asynchronous Data Reception

The USART includes a clock recovery and a data recovery unit for handling asynchronous data reception. The clock recovery logic is used for synchronizing the internally generated baud rate clock to the incoming asynchronous serial frames at the RxDn pin. The data recovery logic samples and low pass filters each incoming bit, thereby improving the noise immunity of the Receiver. The asynchronous reception operational range depends on the accuracy of the internal baud rate clock, the rate of the incoming frames, and the frame size in number of bits.

22.8.1 Asynchronous Clock Recovery

The clock recovery logic synchronizes internal clock to the incoming serial frames. Figure 22-5 on page 214 illustrates the sampling process of the start bit of an incoming frame. The sample rate is 16 times the baud rate for Normal mode, and eight times the baud rate for Double Speed mode. The horizontal arrows illustrate the synchronization variation due to the sampling process. Note the larger time variation when using the Double Speed mode (U2Xn = 1) of operation. Samples denoted zero are samples done when the RxDn line is idle (that is, no communication activity).

Figure 22-5. Start Bit Sampling

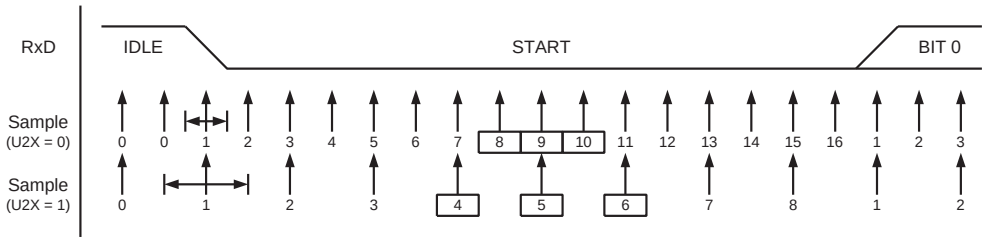

When the clock recovery logic detects a high (idle) to low (start) transition on the RxDn line, the start bit detection sequence is initiated. Let sample 1 denote the first zero-sample as shown in the figure. The clock recovery logic then uses samples 8, 9, and 10 for Normal mode, and samples 4, 5, and 6 for Double Speed mode (indicated with sample numbers inside boxes on the figure), to decide if a valid start bit is received. If two or more of these three samples have logical high levels (the majority wins), the start bit is rejected as a noise spike and the Receiver starts looking for the next high to low-transition. If however, a valid start bit is detected, the clock recovery logic is synchronized and the data recovery can begin. The synchronization process is repeated for each start bit.

22.8.2 Asynchronous Data Recovery

When the receiver clock is synchronized to the start bit, the data recovery can begin. The data recovery unit uses a state machine that has 16 states for each bit in Normal mode and eight states for each bit in Double Speed mode. Figure 22-6 shows the sampling of the data bits and the parity bit. Each of the samples is given a number that is equal to the state of the recovery unit.

Figure 22-6. Sampling of Data and Parity Bit

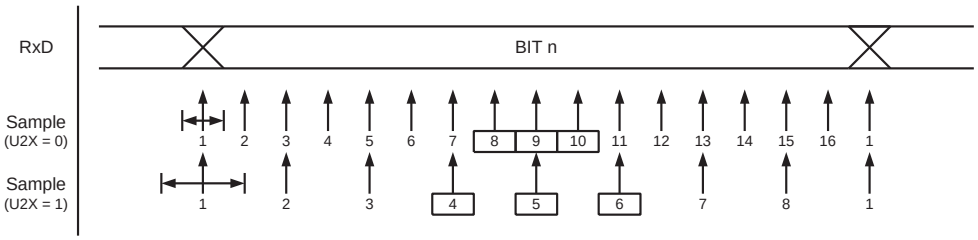

The decision of the logic level of the received bit is taken by doing a majority voting of the logic value to the three samples in the center of the received bit. The center samples are emphasized on the figure by having the sample number inside boxes. The majority voting process is done as follows: If two or all three samples have high levels, the received bit is registered to be a logic 1. If two or all three samples have low levels, the received bit is registered to be a logic 0. This majority voting process acts as a low pass filter for the incoming signal on the RxDn pin. The recovery process is then repeated until a complete frame is received. Including the first stop bit. Note that the Receiver only uses the first stop bit of a frame.

Figure 22-7 shows the sampling of the stop bit and the earliest possible beginning of the start bit of the next frame.

Figure 22-7. Stop Bit Sampling and Next Start Bit Sampling

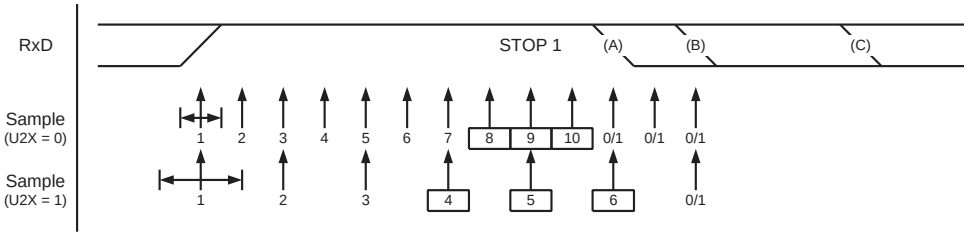

The same majority voting is done to the stop bit as done for the other bits in the frame. If the stop bit is registered to have a logic 0 value, the Frame Error (FEn) Flag will be set.

A new high to low transition indicating the start bit of a new frame can come right after the last of the bits used for majority voting. For Normal Speed mode, the first low level sample can be at point marked (A) in Figure 22-7 on page 214. For Double Speed mode the first low level must be delayed to (B). (C) marks a stop bit of full length. The early start bit detection influences the operational range of the Receiver.

22.8.3 Asynchronous Operational Range

The operational range of the Receiver is dependent on the mismatch between the received bit rate and the internally generated baud rate. If the Transmitter is sending frames at too fast or too slow bit rates, or the internally generated baud rate of the Receiver does not have a similar (see Table 22-2) base frequency, the Receiver will not be able to synchronize the frames to the start bit.

The following equations can be used to calculate the ratio of the incoming data rate and internal receiver baud rate.

$$R_{slow} = \frac{(D+1)S}{S-1+D\cdot S+S_F} \qquad R_{fast} = \frac{(D+2)S}{(D+1)S+S_M}$$

D Sum of character size and parity size (D = 5 to 10 bit).

S Samples per bit. S = 16 for Normal Speed mode and S = 8 for Double Speed mode.

S_F First sample number used for majority voting. S_F = 8 for normal speed and S_F = 4 for Double Speed mode.

S_M Middle sample number used for majority voting. S_M = 9 for normal speed and S_M = 5 for Double Speed mode.

R_{slow} is the ratio of the slowest incoming data rate that can be accepted in relation to the receiver baud rate. R_{fast} is the ratio of the fastest incoming data rate that can be accepted in relation to the receiver baud rate.

Table 22-2 and Table 22-3 on page 216 list the maximum receiver baud rate error that can be tolerated. Note that Normal Speed mode has higher toleration of baud rate variations.

Table 22-2. Recommended Maximum Receiver Baud Rate Error for Normal Speed Mode (U2Xn = 0)

D # (Data+Parity Bit)	R_{slow} (%)	R_{fast} (%)	Max. total error (%)	Recommended max. receiver error (%)
5	93.20	106.67	+6.67/-6.8	±3.0
6	94.12	105.79	+5.79/-5.88	±2.5
7	94.81	105.11	+5.11/-5.19	±2.0
8	95.36	104.58	+4.58/-4.54	±2.0
9	95.81	104.14	+4.14/-4.19	±1.5
10	96.17	103.78	+3.78/-3.83	±1.5

Table 22-3. Recommended Maximum Receiver Baud Rate Error for Double Speed Mode (U2Xn = 1)

D # (Data+Parity Bit)	R_{slow} (%)	R_{fast} (%)	Max. total error (%)	Recommended max. receiver error (%)
5	94.12	105.66	+5.66/-5.88	±2.5
6	94.92	104.92	+4.92/-5.08	±2.0
7	95.52	104.35	+4.35/-4.48	±1.5
8	96.00	103.90	+3.90/-4.00	±1.5
9	96.39	103.53	+3.53/-3.61	±1.5
10	96.70	103.23	+3.23/-3.30	±1.0

The recommendations of the maximum receiver baud rate error was made under the assumption that the Receiver and Transmitter equally divides the maximum total error.

There are two possible sources for the receivers baud rate error. The Receiver's system clock (XTAL) will always have some minor instability over the supply voltage range and the temperature range. When using a crystal to generate the system clock, this is rarely a problem, but for a resonator the system clock may differ more than 2% depending of the resonators tolerance. The second source for the error is more controllable. The baud rate generator can not always do an exact division of the system frequency to get the baud rate wanted. In this case an UBRR value that gives an acceptable low error can be used if possible.

22.9 Multi-processor Communication Mode

Setting the Multi-processor Communication mode (MPCMn) bit in UCSRnA enables a filtering function of incoming frames received by the USART Receiver. Frames that do not contain address information will be ignored and not put into the receive buffer. This effectively reduces the number of incoming frames that has to be handled by the CPU, in a system with multiple MCUs that communicate via the same serial bus. The Transmitter is unaffected by the MPCMn setting, but has to be used differently when it is a part of a system utilizing the Multi-processor Communication mode.

If the Receiver is set up to receive frames that contain 5 to 8 data bits, then the first stop bit indicates if the frame contains data or address information. If the Receiver is set up for frames with nine data bits, then the ninth bit (RXB8n) is used for identifying address and data frames. When the frame type bit (the first stop or the ninth bit) is one, the frame contains an address. When the frame type bit is zero the frame is a data frame.

The Multi-processor Communication mode enables several slave MCUs to receive data from a master MCU. This is done by first decoding an address frame to find out which MCU has been addressed. If a particular slave MCU has been addressed, it will receive the following data frames as normal, while the other slave MCUs will ignore the received frames until another address frame is received.

22.9.1 Using MPCMn

For an MCU to act as a master MCU, it can use a 9-bit character frame format (UCSZn = 7). The ninth bit (TXB8n) must be set when an address frame (TXB8n = 1) or cleared when a data frame (TXB = 0) is being transmitted. The slave MCUs must in this case be set to use a 9-bit character frame format.

The following procedure should be used to exchange data in Multi-processor Communication mode:

1. All Slave MCUs are in Multi-processor Communication mode (MPCMn in UCSRnA is set).
2. The Master MCU sends an address frame, and all slaves receive and read this frame. In the Slave MCUs, the RXCn Flag in UCSRnA will be set as normal.
3. Each Slave MCU reads the UDRn Register and determines if it has been selected. If so, it clears the MPCMn bit in UCSRnA, otherwise it waits for the next address byte and keeps the MPCMn setting.

4. The addressed MCU will receive all data frames until a new address frame is received. The other Slave MCUs, which still have the MPCMn bit set, will ignore the data frames.
5. When the last data frame is received by the addressed MCU, the addressed MCU sets the MPCMn bit and waits for a new address frame from master. The process then repeats from 2.

Using any of the 5-bit to 8-bit character frame formats is possible, but impractical since the Receiver must change between using n and n+1 character frame formats. This makes full-duplex operation difficult since the Transmitter and Receiver uses the same character size setting. If 5-bit to 8-bit character frames are used, the Transmitter must be set to use two stop bit (USBSn = 1) since the first stop bit is used for indicating the frame type.

Do not use Read-Modify-Write instructions (SBI and CBI) to set or clear the MPCMn bit. The MPCMn bit shares the same I/O location as the TXCn Flag and this might accidentally be cleared when using SBI or CBI instructions.

22.10 Register Description

The following section describes the USART's registers.

22.10.1 UDRn – USART I/O Data Register n

Bit	7	6	5	4	3	2	1	0	
	RXB[7:0]								UDRn (Read)
	TXB[7:0]								UDRn (Write)
Read/Write	R/W	R/W	R/W	R/W	R/W	R/W	R/W	R/W	
Initial Value	0	0	0	0	0	0	0	0	

The USART Transmit Data Buffer Register and USART Receive Data Buffer Registers share the same I/O address referred to as USART Data Register or UDRn. The Transmit Data Buffer Register (TXB) will be the destination for data written to the UDRn Register location. Reading the UDRn Register location will return the contents of the Receive Data Buffer Register (RXB).

For 5-bit, 6-bit, or 7-bit characters the upper unused bits will be ignored by the Transmitter and set to zero by the Receiver.

The transmit buffer can only be written when the UDREn Flag in the UCSRnA Register is set. Data written to UDRn when the UDREn Flag is not set, will be ignored by the USART Transmitter. When data is written to the transmit buffer, and the Transmitter is enabled, the Transmitter will load the data into the Transmit Shift Register when the Shift Register is empty. Then the data will be serially transmitted on the TxDn pin.

The receive buffer consists of a two level FIFO. The FIFO will change its state whenever the receive buffer is accessed. Due to this behavior of the receive buffer, do not use Read-Modify-Write instructions (SBI and CBI) on this location. Be careful when using bit test instructions (SBIC and SBIS), since these also will change the state of the FIFO.

22.10.2 UCSRnA – USART Control and Status Register A

Bit	7	6	5	4	3	2	1	0	
	RXCn	TXCn	UDREn	FEn	DORn	UPEn	U2Xn	MPCMn	UCSRnA
Read/Write	R	R/W	R	R	R	R	R/W	R/W	
Initial Value	0	0	1	0	0	0	0	0	

- **Bit 7 – RXCn: USART Receive Complete**

This flag bit is set when there are unread data in the receive buffer and cleared when the receive buffer is empty (that is, does not contain any unread data). If the Receiver is disabled, the receive buffer will be flushed and consequently the RXCn bit will become zero. The RXCn Flag can be used to generate a Receive Complete interrupt (see description of the RXCIEn bit).

- **Bit 6 – TXCn: USART Transmit Complete**

This flag bit is set when the entire frame in the Transmit Shift Register has been shifted out and there are no new data currently present in the transmit buffer (UDRn). The TXCn Flag bit is automatically cleared when a transmit complete interrupt is executed, or it can be cleared by writing a one to its bit location. The TXCn Flag can generate a Transmit Complete interrupt (see description of the TXCIEn bit).

- **Bit 5 – UDREn: USART Data Register Empty**

The UDREn Flag indicates if the transmit buffer (UDRn) is ready to receive new data. If UDREn is one, the buffer is empty, and therefore ready to be written. The UDREn Flag can generate a Data Register Empty interrupt (see description of the UDRIEn bit).

UDREn is set after a reset to indicate that the Transmitter is ready.

- **Bit 4 – FEn: Frame Error**

This bit is set if the next character in the receive buffer had a Frame Error when received, that is, when the first stop bit of the next character in the receive buffer is zero. This bit is valid until the receive buffer (UDRn) is read. The FEn bit is zero when the stop bit of received data is one. Always set this bit to zero when writing to UCSRnA.

- **Bit 3 – DORn: Data OverRun**

This bit is set if a Data OverRun condition is detected. A Data OverRun occurs when the receive buffer is full (two characters), it is a new character waiting in the Receive Shift Register, and a new start bit is detected. This bit is valid until the receive buffer (UDRn) is read. Always set this bit to zero when writing to UCSRnA.

- **Bit 2 – UPEn: USART Parity Error**

This bit is set if the next character in the receive buffer had a Parity Error when received and the Parity Checking was enabled at that point (UPMn1 = 1). This bit is valid until the receive buffer (UDRn) is read. Always set this bit to zero when writing to UCSRnA.

- **Bit 1 – U2Xn: Double the USART Transmission Speed**

This bit only has effect for the asynchronous operation. Write this bit to zero when using synchronous operation.

Writing this bit to one will reduce the divisor of the baud rate divider from 16 to 8 effectively doubling the transfer rate for asynchronous communication.

- **Bit 0 – MPCMn: Multi-processor Communication Mode**

This bit enables the Multi-processor Communication mode. When the MPCMn bit is written to one, all the incoming frames received by the USART Receiver that do not contain address information will be ignored. The Transmitter is unaffected by the MPCMn setting. For more detailed information see “Multi-processor Communication Mode” on page 216.

22.10.3 UCSRnB – USART Control and Status Register n B

Bit	7	6	5	4	3	2	1	0	
	RXCIEn	**TXCIEn**	**UDRIEn**	**RXENn**	**TXENn**	**UCSZn2**	**RXB8n**	**TXB8n**	**UCSRnB**
Read/Write	R/W	R/W	R/W	R/W	R/W	R/W	R	R/W	
Initial Value	0	0	0	0	0	0	0	0	

- **Bit 7 – RXCIEn: RX Complete Interrupt Enable n**

Writing this bit to one enables interrupt on the RXCn Flag. A USART Receive Complete interrupt will be generated only if the RXCIEn bit is written to one, the Global Interrupt Flag in SREG is written to one and the RXCn bit in UCSRnA is set.

- **Bit 6 – TXCIEn: TX Complete Interrupt Enable n**

Writing this bit to one enables interrupt on the TXCn Flag. A USART Transmit Complete interrupt will be generated only if the TXCIEn bit is written to one, the Global Interrupt Flag in SREG is written to one and the TXCn bit in UCSRnA is set.

- **Bit 5 – UDRIEn: USART Data Register Empty Interrupt Enable n**

Writing this bit to one enables interrupt on the UDREn Flag. A Data Register Empty interrupt will be generated only if the UDRIEn bit is written to one, the Global Interrupt Flag in SREG is written to one and the UDREn bit in UCSRnA is set.

- **Bit 4 – RXENn: Receiver Enable n**

Writing this bit to one enables the USART Receiver. The Receiver will override normal port operation for the RxDn pin when enabled. Disabling the Receiver will flush the receive buffer invalidating the FEn, DORn, and UPEn Flags.

- **Bit 3 – TXENn: Transmitter Enable n**

Writing this bit to one enables the USART Transmitter. The Transmitter will override normal port operation for the TxDn pin when enabled. The disabling of the Transmitter (writing TXENn to zero) will not become effective until ongoing and pending transmissions are completed, that is, when the Transmit Shift Register and Transmit Buffer Register do not contain data to be transmitted. When disabled, the Transmitter will no longer override the TxDn port.

- **Bit 2 – UCSZn2: Character Size n**

The UCSZn2 bits combined with the UCSZn1:0 bit in UCSRnC sets the number of data bits (Character SiZe) in a frame the Receiver and Transmitter use.

- **Bit 1 – RXB8n: Receive Data Bit 8 n**

RXB8n is the ninth data bit of the received character when operating with serial frames with nine data bits. Must be read before reading the low bits from UDRn.

- **Bit 0 – TXB8n: Transmit Data Bit 8 n**

TXB8n is the ninth data bit in the character to be transmitted when operating with serial frames with nine data bits. Must be written before writing the low bits to UDRn.

22.10.4 UCSRnC – USART Control and Status Register n C

Bit	7	6	5	4	3	2	1	0	
	UMSELn1	UMSELn0	UPMn1	UPMn0	USBSn	UCSZn1	UCSZn0	UCPOLn	UCSRnC
Read/Write	R/W	R/W	R/W	R/W	R/W	R/W	R/W	R/W	
Initial Value	0	0	0	0	0	1	1	0	

- **Bits 7:6 – UMSELn1:0 USART Mode Select**

These bits select the mode of operation of the USARTn as shown in Table 22-4.

Table 22-4. UMSELn Bits Settings

UMSELn1	UMSELn0	Mode
0	0	Asynchronous USART
0	1	Synchronous USART
1	0	(Reserved)
1	1	Master SPI (MSPIM)[1]

Note: 1. See "USART in SPI Mode" on page 227 for full description of the Master SPI Mode (MSPIM) operation.

- **Bits 5:4 – UPMn1:0: Parity Mode**

These bits enable and set type of parity generation and check. If enabled, the Transmitter will automatically generate and send the parity of the transmitted data bits within each frame. The Receiver will generate a parity value for the incoming data and compare it to the UPMn setting. If a mismatch is detected, the UPEn Flag in UCSRnA will be set.

Table 22-5. UPMn Bits Settings

UPMn1	UPMn0	Parity Mode
0	0	Disabled
0	1	Reserved
1	0	Enabled, Even Parity
1	1	Enabled, Odd Parity

- **Bit 3 – USBSn: Stop Bit Select**

This bit selects the number of stop bits to be inserted by the Transmitter. The Receiver ignores this setting.

Table 22-6. USBS Bit Settings

USBSn	Stop Bit(s)
0	1-bit
1	2-bit

- **Bit 2:1 – UCSZn1:0: Character Size**

The UCSZn1:0 bits combined with the UCSZn2 bit in UCSRnB sets the number of data bits (Character SiZe) in a frame the Receiver and Transmitter use.

Table 22-7. UCSZn Bits Settings

UCSZn2	UCSZn1	UCSZn0	Character Size
0	0	0	5-bit
0	0	1	6-bit
0	1	0	7-bit
0	1	1	8-bit
1	0	0	Reserved
1	0	1	Reserved
1	1	0	Reserved
1	1	1	9-bit

- **Bit 0 – UCPOLn: Clock Polarity**

This bit is used for synchronous mode only. Write this bit to zero when asynchronous mode is used. The UCPOLn bit sets the relationship between data output change and data input sample, and the synchronous clock (XCKn).

Table 22-8. UCPOLn Bit Settings

UCPOLn	Transmitted Data Changed (Output of TxDn Pin)	Received Data Sampled (Input on RxDn Pin)
0	Rising XCKn Edge	Falling XCKn Edge
1	Falling XCKn Edge	Rising XCKn Edge

22.10.5 UBRRnL and UBRRnH – USART Baud Rate Registers

Bit	15	14	13	12	11	10	9	8	
	–	–	–	–	UBRR[11:8]				UBRRHn
	UBRR[7:0]								UBRRLn
	7	6	5	4	3	2	1	0	
Read/Write	R	R	R	R	R/W	R/W	R/W	R/W	
	R/W	R/W	R/W	R/W	R/W	R/W	R/W	R/W	
Initial Value	0	0	0	0	0	0	0	0	
	0	0	0	0	0	0	0	0	

- **Bit 15:12 – Reserved Bits**

These bits are reserved for future use. For compatibility with future devices, these bit must be written to zero when UBRRH is written.

- **Bit 11:0 – UBRR11:0: USART Baud Rate Register**

This is a 12-bit register which contains the USART baud rate. The UBRRH contains the four most significant bits, and the UBRRL contains the eight least significant bits of the USART baud rate. Ongoing transmissions by the Transmitter and Receiver will be corrupted if the baud rate is changed. Writing UBRRL will trigger an immediate update of the baud rate prescaler.

22.11 Examples of Baud Rate Setting

For standard crystal and resonator frequencies, the most commonly used baud rates for asynchronous operation can be generated by using the UBRR settings in Table 22-9 to Table 22-12 on page 226. UBRR values which yield an actual baud rate differing less than 0.5% from the target baud rate, are bold in the table. Higher error ratings are acceptable, but the Receiver will have less noise resistance when the error ratings are high, especially for large serial frames (see "Asynchronous Operational Range" on page 215). The error values are calculated using the following equation:

$$\text{Error}[\%] = \left(\frac{\text{BaudRate}_{\text{Closest Match}}}{\text{BaudRate}} - 1\right) \bullet 100\%$$

Table 22-9. Examples of UBRRn Settings for Commonly Used Oscillator Frequencies

Baud Rate [bps]	f_{osc} = 1.0000MHz				f_{osc} = 1.8432MHz				f_{osc} = 2.0000MHz			
	U2Xn = 0		U2Xn = 1		U2Xn = 0		U2Xn = 1		U2Xn = 0		U2Xn = 1	
	UBRR	Error	UBRR	Error	UBRR	Error	UBRR	Error	UBRR	Error	UBRR	Error
2400	25	0.2%	51	0.2%	47	0.0%	95	0.0%	51	0.2%	103	0.2%
4800	12	0.2%	25	0.2%	23	0.0%	47	0.0%	25	0.2%	51	0.2%
9600	6	-7.0%	12	0.2%	11	0.0%	23	0.0%	12	0.2%	25	0.2%
14.4K	3	8.5%	8	-3.5%	7	0.0%	15	0.0%	8	-3.5%	16	2.1%
19.2K	2	8.5%	6	-7.0%	5	0.0%	11	0.0%	6	-7.0%	12	0.2%
28.8K	1	8.5%	3	8.5%	3	0.0%	7	0.0%	3	8.5%	8	-3.5%
38.4K	1	-18.6%	2	8.5%	2	0.0%	5	0.0%	2	8.5%	6	-7.0%
57.6K	0	8.5%	1	8.5%	1	0.0%	3	0.0%	1	8.5%	3	8.5%
76.8K	–	–	1	-18.6%	1	-25.0%	2	0.0%	1	-18.6%	2	8.5%
115.2K	–	–	0	8.5%	0	0.0%	1	0.0%	0	8.5%	1	8.5%
230.4K	–	–	–	–	–	–	0	0.0%	–	–	–	–
250K	–	–	–	–	–	–	–	–	–	–	0	0.0%
Max.(1)	62.5Kbps		125Kbps		115.2Kbps		230.4Kbps		125Kbps		250Kbps	

Note: 1. UBRR = 0, Error = 0.0%

Table 22-10. Examples of UBRRn Settings for Commonly Used Oscillator Frequencies

Baud Rate [bps]	f_{osc} = 3.6864MHz				f_{osc} = 4.0000MHz				f_{osc} = 7.3728MHz			
	U2Xn = 0		U2Xn = 1		U2Xn = 0		U2Xn = 1		U2Xn = 0		U2Xn = 1	
	UBRR	Error	UBRR	Error	UBRR	Error	UBRR	Error	UBRR	Error	UBRR	Error
2400	95	0.0%	191	0.0%	103	0.2%	207	0.2%	191	0.0%	383	0.0%
4800	47	0.0%	95	0.0%	51	0.2%	103	0.2%	95	0.0%	191	0.0%
9600	23	0.0%	47	0.0%	25	0.2%	51	0.2%	47	0.0%	95	0.0%
14.4K	15	0.0%	31	0.0%	16	2.1%	34	-0.8%	31	0.0%	63	0.0%
19.2K	11	0.0%	23	0.0%	12	0.2%	25	0.2%	23	0.0%	47	0.0%
28.8K	7	0.0%	15	0.0%	8	-3.5%	16	2.1%	15	0.0%	31	0.0%
38.4K	5	0.0%	11	0.0%	6	-7.0%	12	0.2%	11	0.0%	23	0.0%
57.6K	3	0.0%	7	0.0%	3	8.5%	8	-3.5%	7	0.0%	15	0.0%
76.8K	2	0.0%	5	0.0%	2	8.5%	6	-7.0%	5	0.0%	11	0.0%
115.2K	1	0.0%	3	0.0%	1	8.5%	3	8.5%	3	0.0%	7	0.0%
230.4K	0	0.0%	1	0.0%	0	8.5%	1	8.5%	1	0.0%	3	0.0%
250K	0	-7.8%	1	-7.8%	0	0.0%	1	0.0%	1	-7.8%	3	-7.8%
0.5M	–	–	0	-7.8%	–	–	0	0.0%	0	-7.8%	1	-7.8%
1M	–	–	–	–	–	–	–	–	–	–	0	-7.8%
Max.(1)	230.4Kbps		460.8Kbps		250Kbps		0.5Mbps		460.8Kbps		921.6Kbps	

Note: 1. UBRR = 0, Error = 0.0%

Table 22-11. Examples of UBRRn Settings for Commonly Used Oscillator Frequencies

Baud Rate [bps]	f_{osc} = 8.0000MHz				f_{osc} = 11.0592MHz				f_{osc} = 14.7456MHz			
	U2Xn = 0		U2Xn = 1		U2Xn = 0		U2Xn = 1		U2Xn = 0		U2Xn = 1	
	UBRR	Error	UBRR	Error	UBRR	Error	UBRR	Error	UBRR	Error	UBRR	Error
2400	207	0.2%	416	-0.1%	287	0.0%	575	0.0%	383	0.0%	767	0.0%
4800	103	0.2%	207	0.2%	143	0.0%	287	0.0%	191	0.0%	383	0.0%
9600	51	0.2%	103	0.2%	71	0.0%	143	0.0%	95	0.0%	191	0.0%
14.4K	34	-0.8%	68	0.6%	47	0.0%	95	0.0%	63	0.0%	127	0.0%
19.2K	25	0.2%	51	0.2%	35	0.0%	71	0.0%	47	0.0%	95	0.0%
28.8K	16	2.1%	34	-0.8%	23	0.0%	47	0.0%	31	0.0%	63	0.0%
38.4K	12	0.2%	25	0.2%	17	0.0%	35	0.0%	23	0.0%	47	0.0%
57.6K	8	-3.5%	16	2.1%	11	0.0%	23	0.0%	15	0.0%	31	0.0%
76.8K	6	-7.0%	12	0.2%	8	0.0%	17	0.0%	11	0.0%	23	0.0%
115.2K	3	8.5%	8	-3.5%	5	0.0%	11	0.0%	7	0.0%	15	0.0%
230.4K	1	8.5%	3	8.5%	2	0.0%	5	0.0%	3	0.0%	7	0.0%
250K	1	0.0%	3	0.0%	2	-7.8%	5	-7.8%	3	-7.8%	6	5.3%
0.5M	0	0.0%	1	0.0%	–	–	2	-7.8%	1	-7.8%	3	-7.8%
1M	–	–	0	0.0%	–	–	–	–	0	-7.8%	1	-7.8%
Max.(1)	0.5Mbps		1Mbps		691.2Kbps		1.3824Mbps		921.6Kbps		1.8432Mbps	

Note: 1. UBRR = 0, Error = 0.0%

Table 22-12. Examples of UBRRn Settings for Commonly Used Oscillator Frequencies

Baud Rate [bps]	f_{osc} = 16.0000MHz				f_{osc} = 18.4320MHz				f_{osc} = 20.0000MHz			
	U2Xn = 0		U2Xn = 1		U2Xn = 0		U2Xn = 1		U2Xn = 0		U2Xn = 1	
	UBRR	Error	UBRR	Error	UBRR	Error	UBRR	Error	UBRR	Error	UBRR	Error
2400	416	-0.1%	832	0.0%	479	0.0%	959	0.0%	520	0.0%	1041	0.0%
4800	207	0.2%	416	-0.1%	239	0.0%	479	0.0%	259	0.2%	520	0.0%
9600	103	0.2%	207	0.2%	119	0.0%	239	0.0%	129	0.2%	259	0.2%
14.4K	68	0.6%	138	-0.1%	79	0.0%	159	0.0%	86	-0.2%	173	-0.2%
19.2K	51	0.2%	103	0.2%	59	0.0%	119	0.0%	64	0.2%	129	0.2%
28.8K	34	-0.8%	68	0.6%	39	0.0%	79	0.0%	42	0.9%	86	-0.2%
38.4K	25	0.2%	51	0.2%	29	0.0%	59	0.0%	32	-1.4%	64	0.2%
57.6K	16	2.1%	34	-0.8%	19	0.0%	39	0.0%	21	-1.4%	42	0.9%
76.8K	12	0.2%	25	0.2%	14	0.0%	29	0.0%	15	1.7%	32	-1.4%
115.2K	8	-3.5%	16	2.1%	9	0.0%	19	0.0%	10	-1.4%	21	-1.4%
230.4K	3	8.5%	8	-3.5%	4	0.0%	9	0.0%	4	8.5%	10	-1.4%
250K	3	0.0%	7	0.0%	4	-7.8%	8	2.4%	4	0.0%	9	0.0%
0.5M	1	0.0%	3	0.0%	–	–	4	-7.8%	–	–	4	0.0%
1M	0	0.0%	1	0.0%	–	–	–	–	–	–	–	–
Max.(1)	1Mbps		2Mbps		1.152Mbps		2.304Mbps		1.25Mbps		2.5Mbps	

Note: 1. UBRR = 0, Error = 0.0%

23. USART in SPI Mode

The Universal Synchronous and Asynchronous serial Receiver and Transmitter (USART) can be set to a master SPI compliant mode of operation. The Master SPI Mode (MSPIM) has the following features:

- **Full Duplex, Three-wire Synchronous Data Transfer**
- **Master Operation**
- **Supports all four SPI Modes of Operation (Mode 0, 1, 2, and 3)**
- **LSB First or MSB First Data Transfer (Configurable Data Order)**
- **Queued Operation (Double Buffered)**
- **High Resolution Baud Rate Generator**
- **High Speed Operation (fXCKmax = fCK/2)**
- **Flexible Interrupt Generation**

23.1 Overview

Setting both UMSELn1:0 bits to one enables the USART in MSPIM logic. In this mode of operation the SPI master control logic takes direct control over the USART resources. These resources include the transmitter and receiver shift register and buffers, and the baud rate generator. The parity generator and checker, the data and clock recovery logic, and the RX and TX control logic is disabled. The USART RX and TX control logic is replaced by a common SPI transfer control logic. However, the pin control logic and interrupt generation logic is identical in both modes of operation.

The I/O register locations are the same in both modes. However, some of the functionality of the control registers changes when using MSPIM.

23.2 USART MSPIM vs. SPI

The AVR USART in MSPIM mode is fully compatible with the AVR SPI regarding:

- Master mode timing diagram
- The UCPOLn bit functionality is identical to the SPI CPOL bit
- The UCPHAn bit functionality is identical to the SPI CPHA bit
- The UDORDn bit functionality is identical to the SPI DORD bit

However, since the USART in MSPIM mode reuses the USART resources, the use of the USART in MSPIM mode is somewhat different compared to the SPI. In addition to differences of the control register bits, and that only master operation is supported by the USART in MSPIM mode, the following features differ between the two modules:

- The USART in MSPIM mode includes (double) buffering of the transmitter. The SPI has no buffer
- The USART in MSPIM mode receiver includes an additional buffer level
- The SPI WCOL (Write Collision) bit is not included in USART in MSPIM mode
- The SPI double speed mode (SPI2X) bit is not included. However, the same effect is achieved by setting UBRRn accordingly
- Interrupt timing is not compatible
- Pin control differs due to the master only operation of the USART in MSPIM mode

A comparison of the USART in MSPIM mode and the SPI pins is shown in Table 23-4 on page 235.

23.2.1 Clock Generation

The Clock Generation logic generates the base clock for the Transmitter and Receiver. For USART MSPIM mode of operation only internal clock generation (that is, master operation) is supported. The Data Direction Register for the XCKn pin (DDR_XCKn) must therefore be set to one (that is, as output) for the USART in MSPIM to operate

correctly. Preferably the DDR_XCKn should be set up before the USART in MSPIM is enabled (that is, TXENn and RXENn bit set to one).

The internal clock generation used in MSPIM mode is identical to the USART synchronous master mode. The baud rate or UBRRn setting can therefore be calculated using the same equations, see Table 23-1.

Table 23-1. Equations for Calculating Baud Rate Register Setting

Operating Mode	Equation for Calculating Baud Rate[1]	Equation for Calculating UBRRn Value
Synchronous Master mode	$BAUD = \frac{f_{OSC}}{2(\boldsymbol{UBRR}n + 1)}$	$\boldsymbol{UBRR}n = \frac{f_{OSC}}{2BAUD} - 1$

Note: 1. The baud rate is defined to be the transfer rate in bit per second (bps).

BAUD Baud rate (in bits per second, bps).

f_{osc} System Oscillator clock frequency.

UBRRn Contents of the UBRRnH and UBRRnL Registers, (0-4095).

23.3 SPI Data Modes and Timing

There are four combinations of XCKn (SCK) phase and polarity with respect to serial data, which are determined by control bits UCPHAn and UCPOLn. The data transfer timing diagrams are shown in Figure 23-1. Data bits are shifted out and latched in on opposite edges of the XCKn signal, ensuring sufficient time for data signals to stabilize. The UCPOLn and UCPHAn functionality is summarized in Table 23-2. Note that changing the setting of any of these bits will corrupt all ongoing communication for both the Receiver and Transmitter.

Table 23-2. UCPOLn and UCPHAn Functionality.

UCPOLn	UCPHAn	SPI Mode	Leading Edge	Trailing Edge
0	0	0	Sample (Rising)	Setup (Falling)
0	1	1	Setup (Rising)	Sample (Falling)
1	0	2	Sample (Falling)	Setup (Rising)
1	1	3	Setup (Falling)	Sample (Rising)

Figure 23-1. UCPHAn and UCPOLn data transfer timing diagrams.

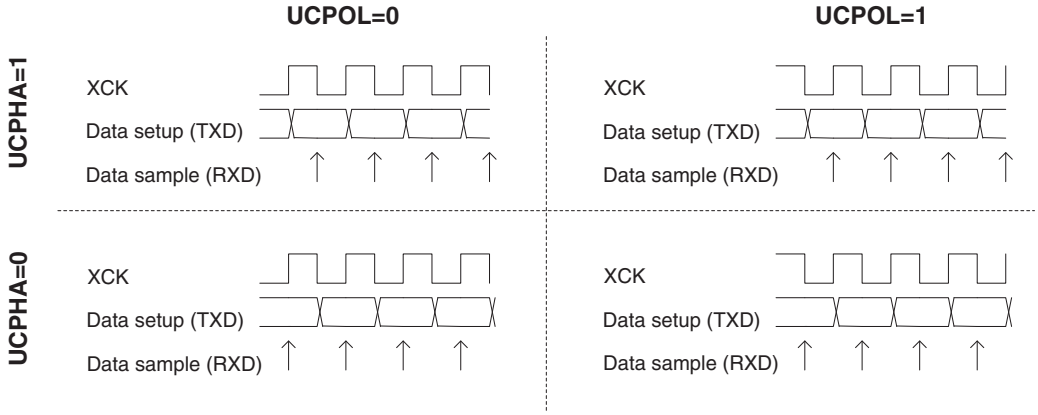

23.4 Frame Formats

A serial frame for the MSPIM is defined to be one character of 8 data bits. The USART in MSPIM mode has two valid frame formats:

- 8-bit data with MSB first
- 8-bit data with LSB first

A frame starts with the least or most significant data bit. Then the next data bits, up to a total of eight, are succeeding, ending with the most or least significant bit accordingly. When a complete frame is transmitted, a new frame can directly follow it, or the communication line can be set to an idle (high) state.

The UDORDn bit in UCSRnC sets the frame format used by the USART in MSPIM mode. The Receiver and Transmitter use the same setting. Note that changing the setting of any of these bits will corrupt all ongoing communication for both the Receiver and Transmitter.

16-bit data transfer can be achieved by writing two data bytes to UDRn. A UART transmit complete interrupt will then signal that the 16-bit value has been shifted out.

23.4.1 USART MSPIM Initialization

The USART in MSPIM mode has to be initialized before any communication can take place. The initialization process normally consists of setting the baud rate, setting master mode of operation (by setting DDR_XCKn to one), setting frame format and enabling the Transmitter and the Receiver. Only the transmitter can operate independently. For interrupt driven USART operation, the Global Interrupt Flag should be cleared (and thus interrupts globally disabled) when doing the initialization.

Note: To ensure immediate initialization of the XCKn output the baud-rate register (UBRRn) must be zero at the time the transmitter is enabled. Contrary to the normal mode USART operation the UBRRn must then be written to the desired value after the transmitter is enabled, but before the first transmission is started. Setting UBRRn to zero before enabling the transmitter is not necessary if the initialization is done immediately after a reset since UBRRn is reset to zero.

Before doing a re-initialization with changed baud rate, data mode, or frame format, be sure that there is no ongoing transmissions during the period the registers are changed. The TXCn Flag can be used to check that the Transmitter has completed all transfers, and the RXCn Flag can be used to check that there are no unread data in the receive buffer. Note that the TXCn Flag must be cleared before each transmission (before UDRn is written) if it is used for this purpose.

The following simple USART initialization code examples show one assembly and one C function that are equal in functionality. The examples assume polling (no interrupts enabled). The baud rate is given as a function parameter. For the assembly code, the baud rate parameter is assumed to be stored in the r17:r16 registers.

Assembly Code Example[1]

```
USART_Init:
  clr r18
  out UBRRnH,r18
  out UBRRnL,r18
  ; Setting the XCKn port pin as output, enables master mode.
  sbi XCKn_DDR, XCKn
  ; Set MSPI mode of operation and SPI data mode 0.
  ldi r18, (1<<UMSELn1)|(1<<UMSELn0)|(0<<UCPHAn)|(0<<UCPOLn)
  out UCSRnC,r18
  ; Enable receiver and transmitter.
  ldi r18, (1<<RXENn)|(1<<TXENn)
  out UCSRnB,r18
  ; Set baud rate.
  ; IMPORTANT: The Baud Rate must be set after the transmitter is
enabled!
  out UBRRnH, r17
  out UBRRnL, r18
  ret
```

C Code Example[1]

```
void USART_Init( unsigned int baud )
{
  UBRRn = 0;
  /* Setting the XCKn port pin as output, enables master mode. */
  XCKn_DDR |= (1<<XCKn);
  /* Set MSPI mode of operation and SPI data mode 0. */
  UCSRnC = (1<<UMSELn1)|(1<<UMSELn0)|(0<<UCPHAn)|(0<<UCPOLn);
  /* Enable receiver and transmitter. */
  UCSRnB = (1<<RXENn)|(1<<TXENn);
  /* Set baud rate. */
  /* IMPORTANT: The Baud Rate must be set after the transmitter is
enabled */
  UBRRn = baud;
}
```

Note: 1. See “About Code Examples” on page 10.

23.5 Data Transfer

Using the USART in MSPI mode requires the Transmitter to be enabled, that is, the TXENn bit in the UCSRnB register is set to one. When the Transmitter is enabled, the normal port operation of the TxDn pin is overridden and given the function as the Transmitter's serial output. Enabling the receiver is optional and is done by setting the RXENn bit in the UCSRnB register to one. When the receiver is enabled, the normal pin operation of the RxDn pin is overridden and given the function as the Receiver's serial input. The XCKn will in both cases be used as the transfer clock.

After initialization the USART is ready for doing data transfers. A data transfer is initiated by writing to the UDRn I/O location. This is the case for both sending and receiving data since the transmitter controls the transfer clock. The data written to UDRn is moved from the transmit buffer to the shift register when the shift register is ready to send a new frame.

Note: To keep the input buffer in sync with the number of data bytes transmitted, the UDRn register must be read once for each byte transmitted. The input buffer operation is identical to normal USART mode, that is, if an overflow occurs the character last received will be lost, not the first data in the buffer. This means that if four bytes are transferred, byte 1 first, then byte 2, 3, and 4, and the UDRn is not read before all transfers are completed, then byte 3 to be received will be lost, and not byte 1.

The following code examples show a simple USART in MSPIM mode transfer function based on polling of the Data Register Empty (UDREn) Flag and the Receive Complete (RXCn) Flag. The USART has to be initialized before the function can be used. For the assembly code, the data to be sent is assumed to be stored in Register R16 and the data received will be available in the same register (R16) after the function returns.

The function simply waits for the transmit buffer to be empty by checking the UDREn Flag, before loading it with new data to be transmitted. The function then waits for data to be present in the receive buffer by checking the RXCn Flag, before reading the buffer and returning the value.

Assembly Code Example[1]

```
USART_MSPIM_Transfer:
  ; Wait for empty transmit buffer
  sbis UCSRnA, UDREn
  rjmp USART_MSPIM_Transfer
  ; Put data (r16) into buffer, sends the data
  out UDRn,r16
  ; Wait for data to be received
USART_MSPIM_Wait_RXCn:
  sbis UCSRnA, RXCn
  rjmp USART_MSPIM_Wait_RXCn
  ; Get and return received data from buffer
  in r16, UDRn
  ret
```

C Code Example[1]

```
unsigned char USART_Receive( void )
{
  /* Wait for empty transmit buffer */
  while ( !( UCSRnA & (1<<UDREn)) );
  /* Put data into buffer, sends the data */
  UDRn = data;
  /* Wait for data to be received */
  while ( !(UCSRnA & (1<<RXCn)) );
  /* Get and return received data from buffer */
  return UDRn;
}
```

Note: 1. See “About Code Examples” on page 10.

23.5.1 Transmitter and Receiver Flags and Interrupts

The RXCn, TXCn, and UDREn flags and corresponding interrupts in USART in MSPIM mode are identical in function to the normal USART operation. However, the receiver error status flags (FE, DOR, and PE) are not in use and is always read as zero.

23.5.2 Disabling the Transmitter or Receiver

The disabling of the transmitter or receiver in USART in MSPIM mode is identical in function to the normal USART operation.

23.6 USART MSPIM Register Description

The following section describes the registers used for SPI operation using the USART.

23.6.1 UDRn – USART MSPIM I/O Data Register

The function and bit description of the USART data register (UDRn) in MSPI mode is identical to normal USART operation. See “UDRn – USART I/O Data Register n” on page 218.

23.6.2 UCSRnA – USART MSPIM Control and Status Register n A

Bit	7	6	5	4	3	2	1	0	
	RXCn	**TXCn**	**UDREn**	**-**	**-**	**-**	**-**	**-**	**UCSRnA**
Read/Write	R/W	R/W	R/W	R	R	R	R	R	
Initial Value	0	0	0	0	0	1	1	0	

- **Bit 7 - RXCn: USART Receive Complete**

This flag bit is set when there are unread data in the receive buffer and cleared when the receive buffer is empty (that is, does not contain any unread data). If the Receiver is disabled, the receive buffer will be flushed and consequently the RXCn bit will become zero. The RXCn Flag can be used to generate a Receive Complete interrupt (see description of the RXCIEn bit).

- **Bit 6 - TXCn: USART Transmit Complete**

This flag bit is set when the entire frame in the Transmit Shift Register has been shifted out and there are no new data currently present in the transmit buffer (UDRn). The TXCn Flag bit is automatically cleared when a transmit complete interrupt is executed, or it can be cleared by writing a one to its bit location. The TXCn Flag can generate a Transmit Complete interrupt (see description of the TXCIEn bit).

- **Bit 5 - UDREn: USART Data Register Empty**

The UDREn Flag indicates if the transmit buffer (UDRn) is ready to receive new data. If UDREn is one, the buffer is empty, and therefore ready to be written. The UDREn Flag can generate a Data Register Empty interrupt (see description of the UDRIE bit). UDREn is set after a reset to indicate that the Transmitter is ready.

- **Bit 4:0 - Reserved Bits in MSPI mode**

When in MSPI mode, these bits are reserved for future use. For compatibility with future devices, these bits must be written to zero when UCSRnA is written.

23.6.3 UCSRnB – USART MSPIM Control and Status Register n B

Bit	7	6	5	4	3	2	1	0	
	RXCIEn	**TXCIEn**	**UDRIE**	**RXENn**	**TXENn**	**-**	**-**	**-**	**UCSRnB**
Read/Write	R/W	R/W	R/W	R/W	R/W	R	R	R	
Initial Value	0	0	0	0	0	1	1	0	

- **Bit 7 - RXCIEn: RX Complete Interrupt Enable**

Writing this bit to one enables interrupt on the RXCn Flag. A USART Receive Complete interrupt will be generated only if the RXCIEn bit is written to one, the Global Interrupt Flag in SREG is written to one and the RXCn bit in UCSRnA is set.

- **Bit 6 - TXCIEn: TX Complete Interrupt Enable**

Writing this bit to one enables interrupt on the TXCn Flag. A USART Transmit Complete interrupt will be generated only if the TXCIEn bit is written to one, the Global Interrupt Flag in SREG is written to one and the TXCn bit in UCSRnA is set.

- **Bit 5 - UDRIE: USART Data Register Empty Interrupt Enable**

Writing this bit to one enables interrupt on the UDREn Flag. A Data Register Empty interrupt will be generated only if the UDRIE bit is written to one, the Global Interrupt Flag in SREG is written to one and the UDREn bit in UCSRnA is set.

- **Bit 4 - RXENn: Receiver Enable**

Writing this bit to one enables the USART Receiver in MSPIM mode. The Receiver will override normal port operation for the RxDn pin when enabled. Disabling the Receiver will flush the receive buffer. Only enabling the receiver in MSPI mode (that is, setting RXENn=1 and TXENn=0) has no meaning since it is the transmitter that controls the transfer clock and since only master mode is supported.

- **Bit 3 - TXENn: Transmitter Enable**

Writing this bit to one enables the USART Transmitter. The Transmitter will override normal port operation for the TxDn pin when enabled. The disabling of the Transmitter (writing TXENn to zero) will not become effective until ongoing and pending transmissions are completed, that is, when the Transmit Shift Register and Transmit Buffer Register do not contain data to be transmitted. When disabled, the Transmitter will no longer override the TxDn port.

- **Bit 2:0 - Reserved Bits in MSPI mode**

When in MSPI mode, these bits are reserved for future use. For compatibility with future devices, these bits must be written to zero when UCSRnB is written.

23.6.4 UCSRnC – USART MSPIM Control and Status Register n C

Bit	7	6	5	4	3	2	1	0	
	UMSELn1	UMSELn0	-	-	-	UDORDn	UCPHAn	UCPOLn	UCSRnC
Read/Write	R/W	R/W	R	R	R	R/W	R/W	R/W	
Initial Value	0	0	0	0	0	1	1	0	

- **Bit 7:6 - UMSELn1:0: USART Mode Select**

These bits select the mode of operation of the USART as shown in Table 23-3. See "UCSRnC – USART Control and Status Register n C" on page 221 for full description of the normal USART operation. The MSPIM is enabled when both UMSELn bits are set to one. The UDORDn, UCPHAn, and UCPOLn can be set in the same write operation where the MSPIM is enabled.

Table 23-3. UMSELn Bits Settings

UMSELn1	UMSELn0	Mode
0	0	Asynchronous USART
0	1	Synchronous USART
1	0	(Reserved)
1	1	Master SPI (MSPIM)

- **Bit 5:3 - Reserved Bits in MSPI mode**

When in MSPI mode, these bits are reserved for future use. For compatibility with future devices, these bits must be written to zero when UCSRnC is written.

- **Bit 2 - UDORDn: Data Order**

When set to one the LSB of the data word is transmitted first. When set to zero the MSB of the data word is transmitted first. Refer to "SPI Data Modes and Timing" on page 228 for details.

- **Bit 1 - UCPHAn: Clock Phase**

The UCPHAn bit setting determine if data is sampled on the leasing edge (first) or tailing (last) edge of XCKn. Refer to "SPI Data Modes and Timing" on page 228 for details.

- **Bit 0 - UCPOLn: Clock Polarity**

The UCPOLn bit sets the polarity of the XCKn clock. The combination of the UCPOLn and UCPHAn bit settings determine the timing of the data transfer. Refer to "SPI Data Modes and Timing" on page 228 for details.

23.6.5 UBRRnL and UBRRnH – USART MSPIM Baud Rate Registers

The function and bit description of the baud rate registers in MSPI mode is identical to normal USART operation. See "UBRRnL and UBRRnH – USART Baud Rate Registers" on page 222.

Table 23-4. Comparison of USART in MSPIM mode and SPI pins.

USART_MSPIM	SPI	Comment
TxDn	MOSI	Master Out only
RxDn	MISO	Master In only
XCKn	SCK	(Functionally identical)
(N/A)	$\overline{SS}$	Not supported by USART in MSPIM

24. 2-wire Serial Interface

24.1 Features

- **Simple yet Powerful and Flexible Communication Interface, only two Bus Lines needed**
- **Both Master and Slave Operation Supported**
- **Device can Operate as Transmitter or Receiver**
- **7-bit Address Space Allows up to 128 Different Slave Addresses**
- **Multi-master Arbitration Support**
- **Up to 400kHz Data Transfer Speed**
- **Slew-rate Limited Output Drivers**
- **Noise Suppression Circuitry Rejects Spikes on Bus Lines**
- **Fully Programmable Slave Address with General Call Support**
- **Address Recognition Causes Wake-up When AVR is in Sleep Mode**

24.2 2-wire Serial Interface Bus Definition

The 2-wire Serial Interface (TWI) is ideally suited for typical microcontroller applications. The TWI protocol allows the systems designer to interconnect up to 128 different devices using only two bi-directional bus lines, one for clock (SCL) and one for data (SDA). The only external hardware needed to implement the bus is a single pull-up resistor for each of the TWI bus lines. All devices connected to the bus have individual addresses, and mechanisms for resolving bus contention are inherent in the TWI protocol.

Figure 24-1. TWI Bus Interconnection

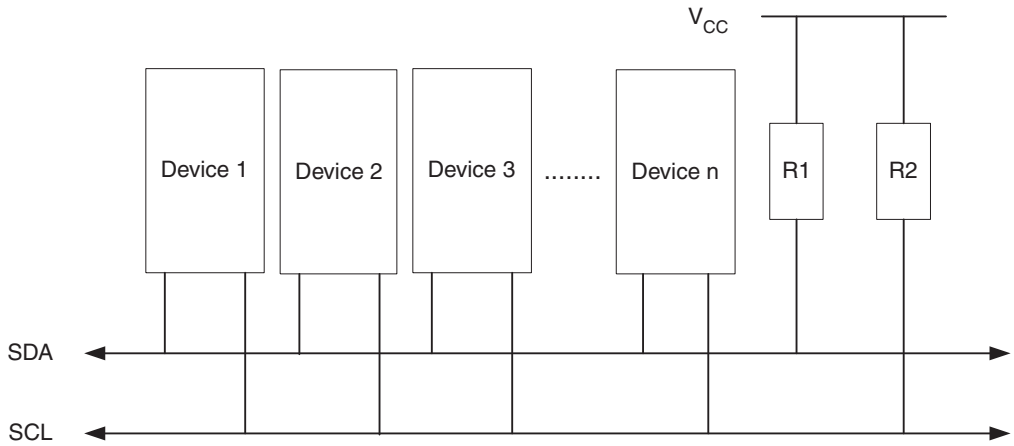

24.2.1 TWI Terminology

The following definitions are frequently encountered in this section.

Table 24-1. TWI Terminology

Term	Description
Master	The device that initiates and terminates a transmission. The Master also generates the SCL clock
Slave	The device addressed by a Master
Transmitter	The device placing data on the bus
Receiver	The device reading data from the bus

The Power Reduction TWI bit, PRTWI bit in “PRR0 – Power Reduction Register 0” on page 55 must be written to zero to enable the 2-wire Serial Interface.

24.2.2 Electrical Interconnection

As depicted in Figure 24-1 on page 236, both bus lines are connected to the positive supply voltage through pull-up resistors. The bus drivers of all TWI-compliant devices are open-drain or open-collector. This implements a wired-AND function which is essential to the operation of the interface. A low level on a TWI bus line is generated when one or more TWI devices output a zero. A high level is output when all TWI devices trim-state their outputs, allowing the pull-up resistors to pull the line high. Note that all AVR devices connected to the TWI bus must be powered in order to allow any bus operation.

The number of devices that can be connected to the bus is only limited by the bus capacitance limit of 400pF and the 7-bit slave address space. A detailed specification of the electrical characteristics of the TWI is given in "SPI Timing Characteristics" on page 363. Two different sets of specifications are presented there, one relevant for bus speeds below 100kHz, and one valid for bus speeds up to 400kHz.

24.3 Data Transfer and Frame Format

24.3.1 Transferring Bits

Each data bit transferred on the TWI bus is accompanied by a pulse on the clock line. The level of the data line must be stable when the clock line is high. The only exception to this rule is for generating start and stop conditions.

Figure 24-2. Data Validity

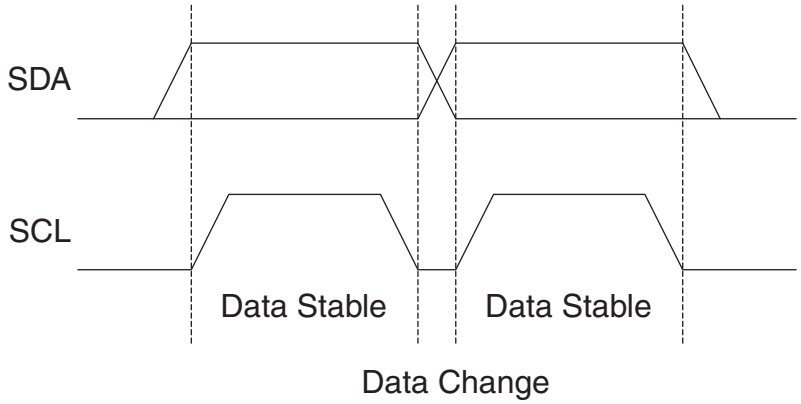

24.3.2 START and STOP Conditions

The Master initiates and terminates a data transmission. The transmission is initiated when the Master issues a START condition on the bus, and it is terminated when the Master issues a STOP condition. Between a START and a STOP condition, the bus is considered busy, and no other master should try to seize control of the bus. A special case occurs when a new START condition is issued between a START and STOP condition. This is referred to as a REPEATED START condition, and is used when the Master wishes to initiate a new transfer without relinquishing control of the bus. After a REPEATED START, the bus is considered busy until the next STOP. This is identical to the START behavior, and therefore START is used to describe both START and REPEATED START for the remainder of this datasheet, unless otherwise noted. As depicted below, START and STOP conditions are signalled by changing the level of the SDA line when the SCL line is high.

Figure 24-3. START, REPEATED START and STOP conditions

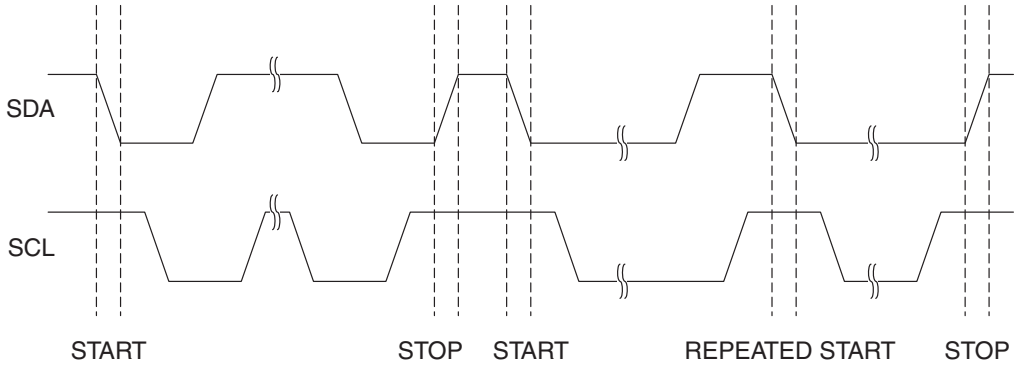

24.3.3 Address Packet Format

All address packets transmitted on the TWI bus are 9 bits long, consisting of 7 address bits, one READ/WRITE control bit and an acknowledge bit. If the READ/WRITE bit is set, a read operation is to be performed, otherwise a write operation should be performed. When a Slave recognizes that it is being addressed, it should acknowledge by pulling SDA low in the ninth SCL (ACK) cycle. If the addressed Slave is busy, or for some other reason can not service the Master's request, the SDA line should be left high in the ACK clock cycle. The Master can then transmit a STOP condition, or a REPEATED START condition to initiate a new transmission. An address packet consisting of a slave address and a READ or a WRITE bit is called SLA+R or SLA+W, respectively.

The MSB of the address byte is transmitted first. Slave addresses can freely be allocated by the designer, but the address 0000 000 is reserved for a general call.

When a general call is issued, all slaves should respond by pulling the SDA line low in the ACK cycle. A general call is used when a Master wishes to transmit the same message to several slaves in the system. When the general call address followed by a Write bit is transmitted on the bus, all slaves set up to acknowledge the general call will pull the SDA line low in the ack cycle. The following data packets will then be received by all the slaves that acknowledged the general call. Note that transmitting the general call address followed by a Read bit is meaningless, as this would cause contention if several slaves started transmitting different data.

All addresses of the format 1111 xxx should be reserved for future purposes.

Figure 24-4. Address Packet Format

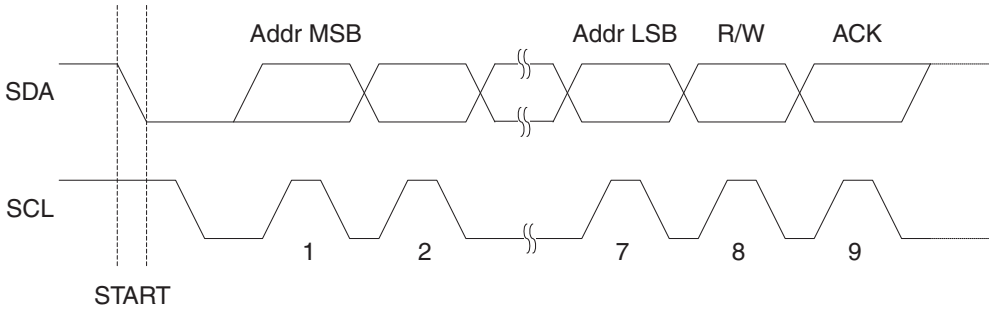

24.3.4 Data Packet Format

All data packets transmitted on the TWI bus are nine bits long, consisting of one data byte and an acknowledge bit. During a data transfer, the Master generates the clock and the START and STOP conditions, while the Receiver is responsible for acknowledging the reception. An Acknowledge (ACK) is signalled by the Receiver pulling the SDA line low during the ninth SCL cycle. If the Receiver leaves the SDA line high, a NACK is signalled. When the Receiver has received the last byte, or for some reason cannot receive any more bytes, it should inform the Transmitter by sending a NACK after the final byte. The MSB of the data byte is transmitted first.

Figure 24-5. Data Packet Format

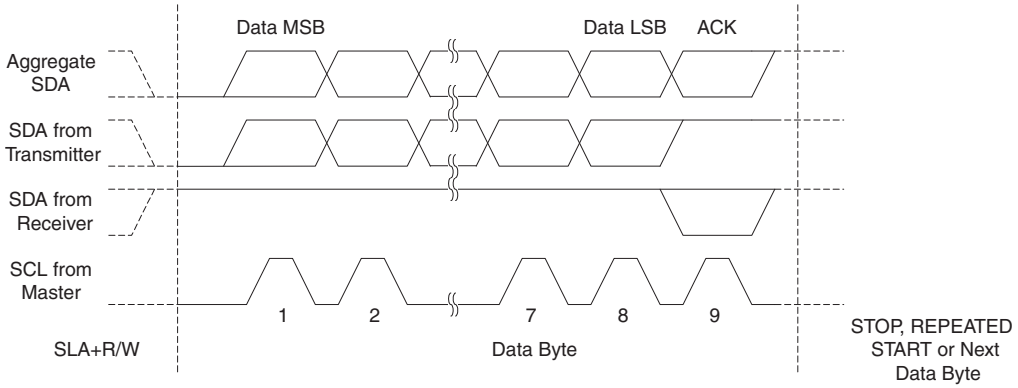

24.3.5 Combining Address and Data Packets into a Transmission

A transmission basically consists of a START condition, a SLA+R/W, one or more data packets and a STOP condition. An empty message, consisting of a START followed by a STOP condition, is illegal. Note that the Wired-ANDing of the SCL line can be used to implement handshaking between the Master and the Slave. The Slave can extend the SCL low period by pulling the SCL line low. This is useful if the clock speed set up by the Master is too fast for the Slave, or the Slave needs extra time for processing between the data transmissions. The Slave extending the SCL low period will not affect the SCL high period, which is determined by the Master. As a consequence, the Slave can reduce the TWI data transfer speed by prolonging the SCL duty cycle.

Figure 24-6 shows a typical data transmission. Note that several data bytes can be transmitted between the SLA+R/W and the STOP condition, depending on the software protocol implemented by the application software.

Figure 24-6. Typical Data Transmission

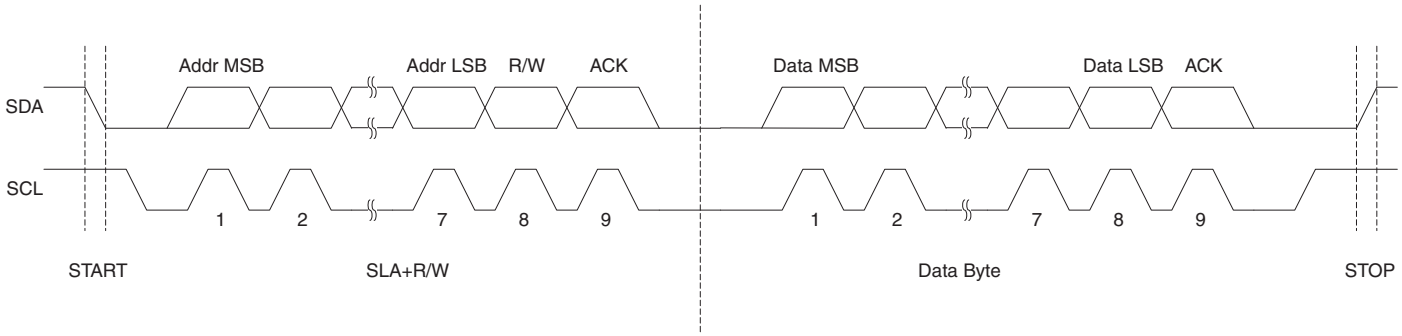

24.4 Multi-master Bus Systems, Arbitration, and Synchronization

The TWI protocol allows bus systems with several masters. Special concerns have been taken in order to ensure that transmissions will proceed as normal, even if two or more masters initiate a transmission at the same time. Two problems arise in multi-master systems:

- An algorithm must be implemented allowing only one of the masters to complete the transmission. All other masters should cease transmission when they discover that they have lost the selection process. This selection process is called arbitration. When a contending master discovers that it has lost the arbitration process, it should immediately switch to Slave mode to check whether it is being addressed by the winning master. The fact that multiple masters have started transmission at the same time should not be detectable to the slaves, that is, the data being transferred on the bus must not be corrupted.
- Different masters may use different SCL frequencies. A scheme must be devised to synchronize the serial clocks from all masters, in order to let the transmission proceed in a lockstep fashion. This will facilitate the arbitration process.

The wired-ANDing of the bus lines is used to solve both these problems. The serial clocks from all masters will be wired-ANDed, yielding a combined clock with a high period equal to the one from the Master with the shortest high period. The low period of the combined clock is equal to the low period of the Master with the longest low period. Note that all masters listen to the SCL line, effectively starting to count their SCL high and low time-out periods when the combined SCL line goes high or low, respectively.

Figure 24-7. SCL Synchronization Between Multiple Masters

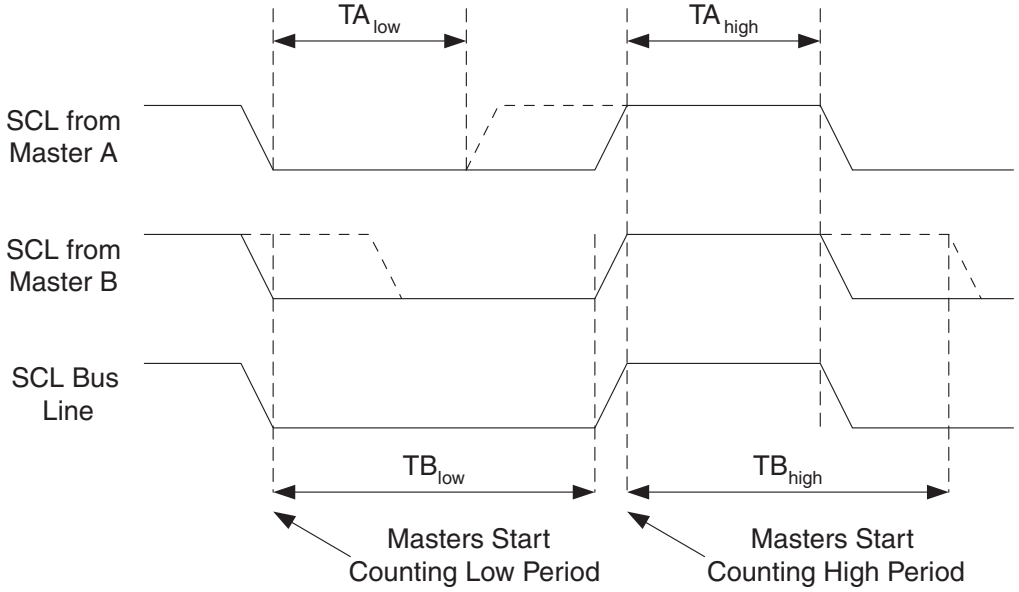

Arbitration is carried out by all masters continuously monitoring the SDA line after outputting data. If the value read from the SDA line does not match the value the Master had output, it has lost the arbitration. Note that a Master can only lose arbitration when it outputs a high SDA value while another Master outputs a low value. The losing Master should immediately go to Slave mode, checking if it is being addressed by the winning Master. The SDA line should be left high, but losing masters are allowed to generate a clock signal until the end of the current data or address packet. Arbitration will continue until only one Master remains, and this may take many bits. If several masters are trying to address the same Slave, arbitration will continue into the data packet.

Figure 24-8. Arbitration Between Two Masters

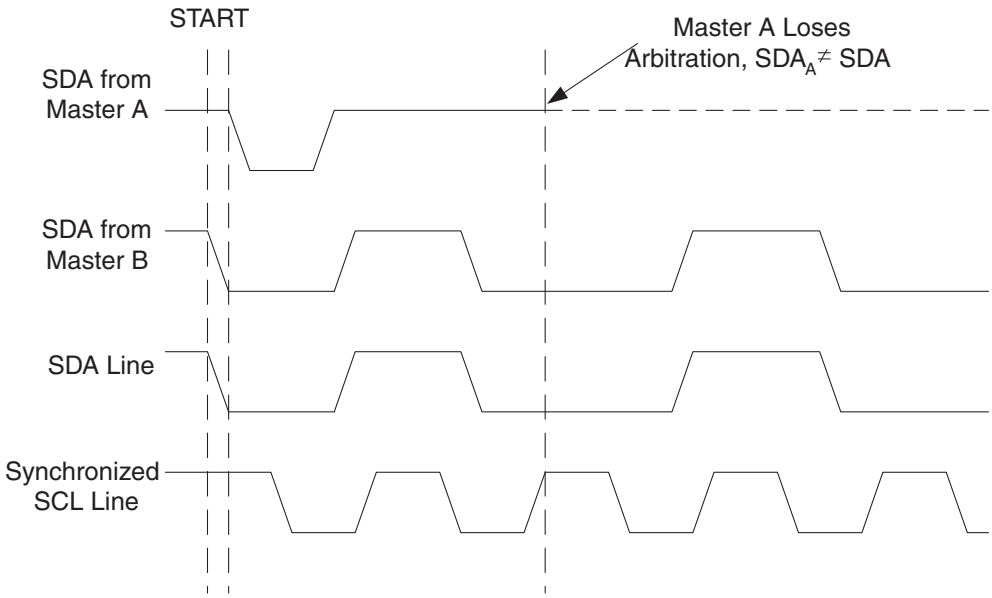

Note that arbitration is not allowed between:

- A REPEATED START condition and a data bit
- A STOP condition and a data bit
- A REPEATED START and a STOP condition

It is the user software's responsibility to ensure that these illegal arbitration conditions never occur. This implies that in multi-master systems, all data transfers must use the same composition of SLA+R/W and data packets. In other words: All transmissions must contain the same number of data packets, otherwise the result of the arbitration is undefined.

24.5 Overview of the TWI Module

The TWI module is comprised of several sub-modules, as shown in Figure 24-9 on page 242. All registers drawn in a thick line are accessible through the AVR data bus.

Figure 24-9. Overview of the TWI Module

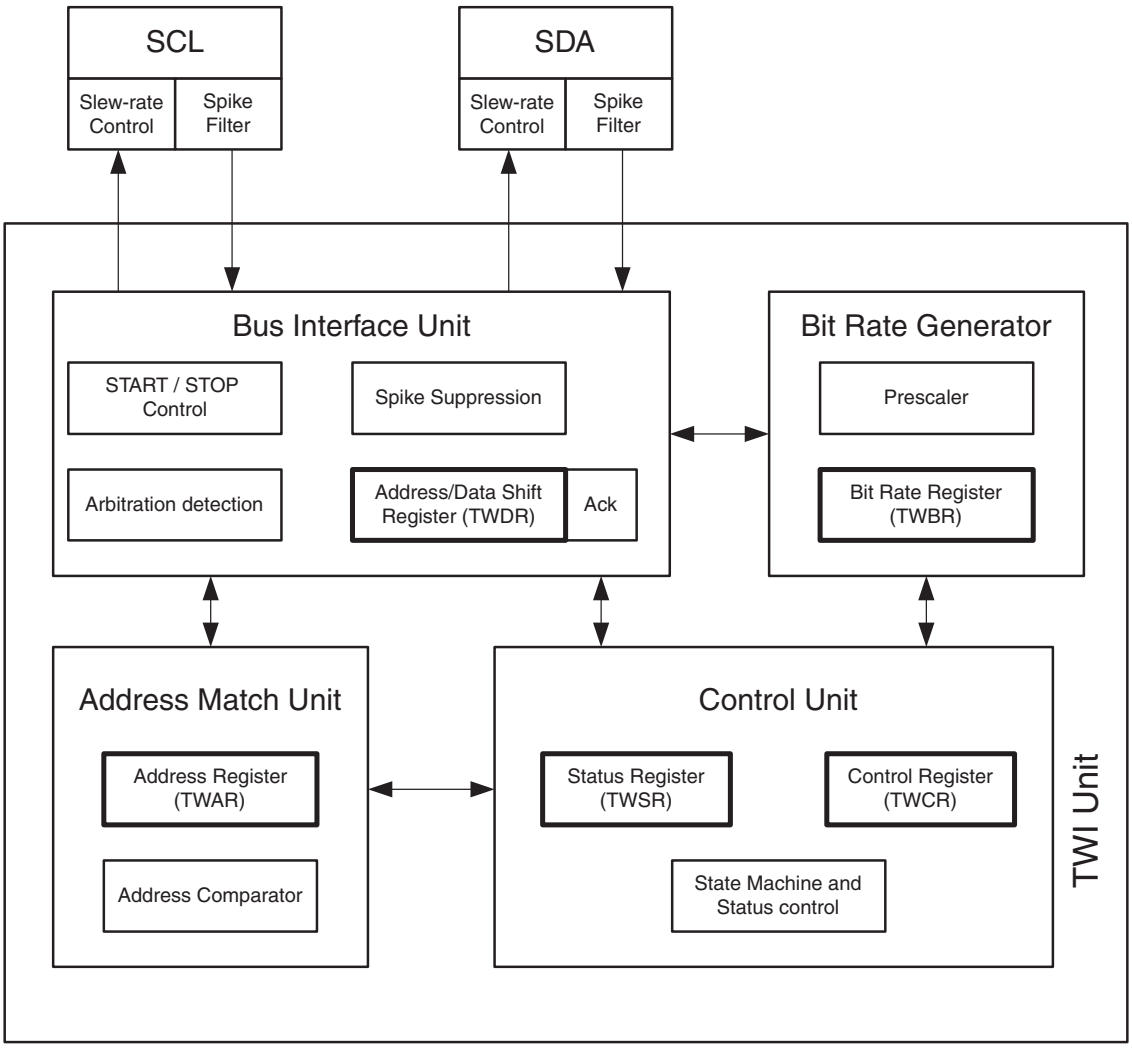

24.5.1 SCL and SDA Pins

These pins interface the AVR TWI with the rest of the MCU system. The output drivers contain a slew-rate limiter in order to conform to the TWI specification. The input stages contain a spike suppression unit removing spikes shorter than 50ns. Note that the internal pull-ups in the AVR pads can be enabled by setting the PORT bits corresponding to the SCL and SDA pins, as explained in the I/O Port section. The internal pull-ups can in some systems eliminate the need for external ones.

24.5.2 Bit Rate Generator Unit

This unit controls the period of SCL when operating in a Master mode. The SCL period is controlled by settings in the TWI Bit Rate Register (TWBR) and the Prescaler bits in the TWI Status Register (TWSR). Slave operation does not depend on Bit Rate or Prescaler settings, but the CPU clock frequency in the Slave must be at least 16 times higher than the SCL frequency. Note that slaves may prolong the SCL low period, thereby reducing the average TWI bus clock period.

The SCL frequency is generated according to the following equation:

$$\text{SCL frequency} = \frac{\text{CPU Clock frequency}}{16 + 2(\text{TWBR}) \cdot 4^{TWPS}}$$

- TWBR = Value of the TWI Bit Rate Register
- TWPS = Value of the prescaler bits in the TWI Status Register

Note: Pull-up resistor values should be selected according to the SCL frequency and the capacitive bus line load. See "2-wire Serial Interface Characteristics" on page 361 for value of pull-up resistor.

24.5.3 Bus Interface Unit

This unit contains the Data and Address Shift Register (TWDR), a START/STOP Controller and Arbitration detection hardware. The TWDR contains the address or data bytes to be transmitted, or the address or data bytes received. In addition to the 8-bit TWDR, the Bus Interface Unit also contains a register containing the (N)ACK bit to be transmitted or received. This (N)ACK Register is not directly accessible by the application software. However, when receiving, it can be set or cleared by manipulating the TWI Control Register (TWCR). When in Transmitter mode, the value of the received (N)ACK bit can be determined by the value in the TWSR.

The START/STOP Controller is responsible for generation and detection of START, REPEATED START, and STOP conditions. The START/STOP controller is able to detect START and STOP conditions even when the AVR MCU is in one of the sleep modes, enabling the MCU to wake up if addressed by a Master.

If the TWI has initiated a transmission as Master, the Arbitration Detection hardware continuously monitors the transmission trying to determine if arbitration is in process. If the TWI has lost an arbitration, the Control Unit is informed. Correct action can then be taken and appropriate status codes generated.

24.5.4 Address Match Unit

The Address Match unit checks if received address bytes match the seven-bit address in the TWI Address Register (TWAR). If the TWI General Call Recognition Enable (TWGCE) bit in the TWAR is written to one, all incoming address bits will also be compared against the General Call address. Upon an address match, the Control Unit is informed, allowing correct action to be taken. The TWI may or may not acknowledge its address, depending on settings in the TWCR. The Address Match unit is able to compare addresses even when the AVR MCU is in sleep mode, enabling the MCU to wake up if addressed by a Master. If another interrupt (for example, INT0) occurs during TWI Power-down address match and wakes up the CPU, the TWI aborts operation and return to it's idle state. If this cause any problems, ensure that TWI Address Match is the only enabled interrupt when entering Power-down.

24.5.5 Control Unit

The Control unit monitors the TWI bus and generates responses corresponding to settings in the TWI Control Register (TWCR). When an event requiring the attention of the application occurs on the TWI bus, the TWI Interrupt Flag (TWINT) is asserted. In the next clock cycle, the TWI Status Register (TWSR) is updated with a status code identifying the event. The TWSR only contains relevant status information when the TWI Interrupt Flag is asserted. At all other times, the TWSR contains a special status code indicating that no relevant status information is available. As long as the TWINT Flag is set, the SCL line is held low. This allows the application software to complete its tasks before allowing the TWI transmission to continue.

The TWINT Flag is set in the following situations:

- After the TWI has transmitted a START/REPEATED START condition
- After the TWI has transmitted SLA+R/W
- After the TWI has transmitted an address byte
- After the TWI has lost arbitration
- After the TWI has been addressed by own slave address or general call
- After the TWI has received a data byte
- After a STOP or REPEATED START has been received while still addressed as a Slave
- When a bus error has occurred due to an illegal START or STOP condition

24.6 Using the TWI

The AVR TWI is byte-oriented and interrupt based. Interrupts are issued after all bus events, like reception of a byte or transmission of a START condition. Because the TWI is interrupt-based, the application software is free to carry on other operations during a TWI byte transfer. Note that the TWI Interrupt Enable (TWIE) bit in TWCR together with the Global Interrupt Enable bit in SREG allow the application to decide whether or not assertion of the TWINT Flag should generate an interrupt request. If the TWIE bit is cleared, the application must poll the TWINT Flag in order to detect actions on the TWI bus.

When the TWINT Flag is asserted, the TWI has finished an operation and awaits application response. In this case, the TWI Status Register (TWSR) contains a value indicating the current state of the TWI bus. The application software can then decide how the TWI should behave in the next TWI bus cycle by manipulating the TWCR and TWDR Registers.

Figure 24-10 is a simple example of how the application can interface to the TWI hardware. In this example, a Master wishes to transmit a single data byte to a Slave. This description is quite abstract, a more detailed explanation follows later in this section. A simple code example implementing the desired behavior is also presented.

Figure 24-10. Interfacing the Application to the TWI in a Typical Transmission

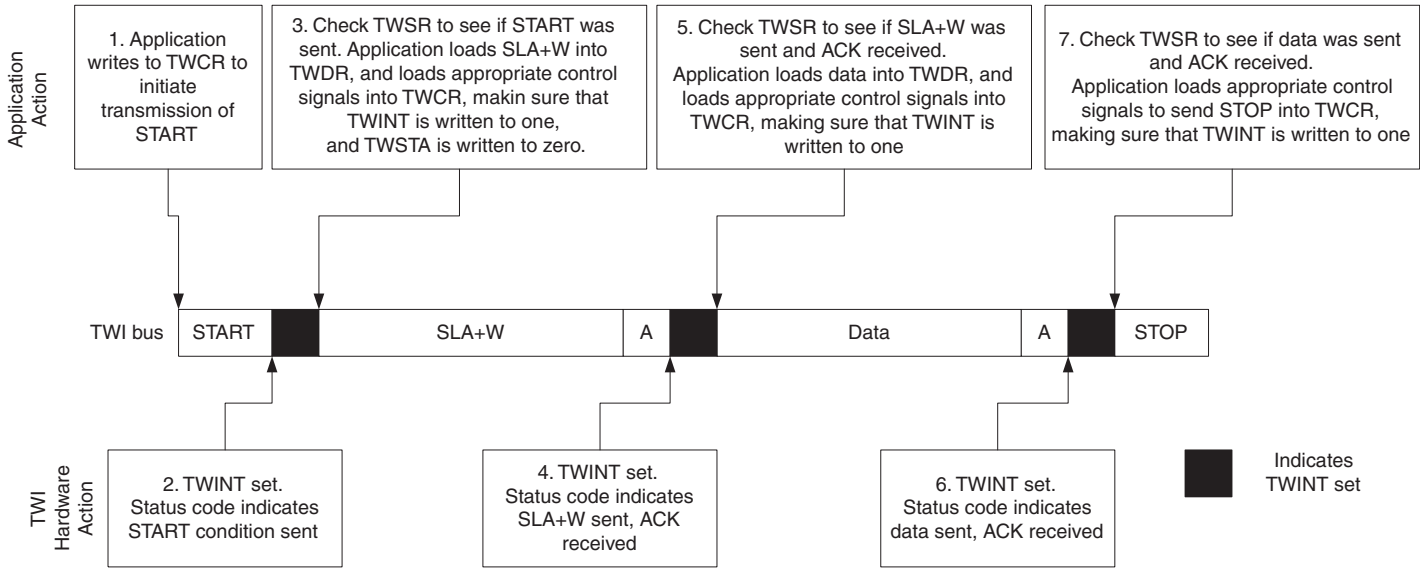

1. The first step in a TWI transmission is to transmit a START condition. This is done by writing a specific value into TWCR, instructing the TWI hardware to transmit a START condition. Which value to write is described later on. However, it is important that the TWINT bit is set in the value written. Writing a one to TWINT clears the flag. The TWI will not start any operation as long as the TWINT bit in TWCR is set. Immediately after the application has cleared TWINT, the TWI will initiate transmission of the START condition.
2. When the START condition has been transmitted, the TWINT Flag in TWCR is set, and TWSR is updated with a status code indicating that the START condition has successfully been sent.
3. The application software should now examine the value of TWSR, to make sure that the START condition was successfully transmitted. If TWSR indicates otherwise, the application software might take some special action, like calling an error routine. Assuming that the status code is as expected, the application must load SLA+W into TWDR. Remember that TWDR is used both for address and data. After TWDR has been loaded with the desired SLA+W, a specific value must be written to TWCR, instructing the TWI hardware to transmit the SLA+W present in TWDR. Which value to write is described later on. However, it is important that the TWINT bit is set in the value written. Writing a one to TWINT clears the flag. The TWI will not start any operation as long as the TWINT bit in TWCR is set. Immediately after the application has cleared TWINT, the TWI will initiate transmission of the address packet.

4. When the address packet has been transmitted, the TWINT Flag in TWCR is set, and TWSR is updated with a status code indicating that the address packet has successfully been sent. The status code will also reflect whether a Slave acknowledged the packet or not.
5. The application software should now examine the value of TWSR, to make sure that the address packet was successfully transmitted, and that the value of the ACK bit was as expected. If TWSR indicates otherwise, the application software might take some special action, like calling an error routine. Assuming that the status code is as expected, the application must load a data packet into TWDR. Subsequently, a specific value must be written to TWCR, instructing the TWI hardware to transmit the data packet present in TWDR. Which value to write is described later on. However, it is important that the TWINT bit is set in the value written. Writing a one to TWINT clears the flag. The TWI will not start any operation as long as the TWINT bit in TWCR is set. Immediately after the application has cleared TWINT, the TWI will initiate transmission of the data packet.
6. When the data packet has been transmitted, the TWINT Flag in TWCR is set, and TWSR is updated with a status code indicating that the data packet has successfully been sent. The status code will also reflect whether a Slave acknowledged the packet or not.
7. The application software should now examine the value of TWSR, to make sure that the data packet was successfully transmitted, and that the value of the ACK bit was as expected. If TWSR indicates otherwise, the application software might take some special action, like calling an error routine. Assuming that the status code is as expected, the application must write a specific value to TWCR, instructing the TWI hardware to transmit a STOP condition. Which value to write is described later on. However, it is important that the TWINT bit is set in the value written. Writing a one to TWINT clears the flag. The TWI will not start any operation as long as the TWINT bit in TWCR is set. Immediately after the application has cleared TWINT, the TWI will initiate transmission of the STOP condition. Note that TWINT is NOT set after a STOP condition has been sent.

Even though this example is simple, it shows the principles involved in all TWI transmissions. These can be summarized as follows:

- When the TWI has finished an operation and expects application response, the TWINT Flag is set. The SCL line is pulled low until TWINT is cleared.
- When the TWINT Flag is set, the user must update all TWI Registers with the value relevant for the next TWI bus cycle. As an example, TWDR must be loaded with the value to be transmitted in the next bus cycle.
- After all TWI Register updates and other pending application software tasks have been completed, TWCR is written. When writing TWCR, the TWINT bit should be set. Writing a one to TWINT clears the flag. The TWI will then commence executing whatever operation was specified by the TWCR setting.

In the following an assembly and C implementation of the example is given. Note that the code below assumes that several definitions have been made, for example by using include-files.

	Assembly Code Example	C Example	Comments
1	`ldi r16, (1<<TWINT)|(1<<TWSTA)|(1<<TWEN)` `out TWCR, r16`	`TWCR = (1<<TWINT)|(1<<TWSTA)|(1<<TWEN)`	Send START condition

2	`wait1:`
	`in r16,TWCR`
	`sbrs r16,TWINT`
	`rjmp wait1`
		`while (!(TWCR & (1<<TWINT)))`
		`;`
			Wait for TWINT Flag set. This indicates that the START condition has been transmitted

3	`in r16,TWSR`
	`andi r16, 0xF8`
	`cpi r16, START`
	`brne ERROR`
		`if ((TWSR & 0xF8) != START)`
		`ERROR();`
			Check value of TWI Status Register. Mask prescaler bits. If status different from START go to ERROR

	`ldi r16, SLA_W`
	`out TWDR, r16`
	`ldi r16, (1<<TWINT) | (1<<TWEN)`
	`out TWCR, r16`
		`TWDR = SLA_W;`
		`TWCR = (1<<TWINT) | (1<<TWEN);`
			Load SLA_W into TWDR Register. Clear TWINT bit in TWCR to start transmission of address

4	`wait2:`
	`in r16,TWCR`
	`sbrs r16,TWINT`
	`rjmp wait2`
		`while (!(TWCR & (1<<TWINT)))`
		`;`
			Wait for TWINT Flag set. This indicates that the SLA+W has been transmitted, and ACK/NACK has been received.

5	`in r16,TWSR`
	`andi r16, 0xF8`
	`cpi r16, MT_SLA_ACK`
	`brne ERROR`
		`if ((TWSR & 0xF8) != MT_SLA_ACK)`
		`ERROR();`
			Check value of TWI Status Register. Mask prescaler bits. If status different from MT_SLA_ACK go to ERROR

	`ldi r16, DATA`
	`out TWDR, r16`
	`ldi r16, (1<<TWINT) | (1<<TWEN)`
	`out TWCR, r16`
		`TWDR = DATA;`
		`TWCR = (1<<TWINT) | (1<<TWEN);`
			Load DATA into TWDR Register. Clear TWINT bit in TWCR to start transmission of data

6	`wait3:`
	`in r16,TWCR`
	`sbrs r16,TWINT`
	`rjmp wait3`
		`while (!(TWCR & (1<<TWINT)))`
		`;`
			Wait for TWINT Flag set. This indicates that the DATA has been transmitted, and ACK/NACK has been received.

7	`in r16,TWSR`
	`andi r16, 0xF8`
	`cpi r16, MT_DATA_ACK`
	`brne ERROR`
		`if ((TWSR & 0xF8) != MT_DATA_ACK)`
		`ERROR();`
			Check value of TWI Status Register. Mask prescaler bits. If status different from MT_DATA_ACK go to ERROR

	`ldi r16, (1<<TWINT)|(1<<TWEN)|(1<<TWSTO)` `out TWCR, r16`	`TWCR = (1<<TWINT)|(1<<TWEN)|(1<<TWSTO);`	Transmit STOP condition

24.7 Transmission Modes

The TWI can operate in one of four major modes. These are named Master Transmitter (MT), Master Receiver (MR), Slave Transmitter (ST) and Slave Receiver (SR). Several of these modes can be used in the same application. As an example, the TWI can use MT mode to write data into a TWI EEPROM, MR mode to read the data back from the EEPROM. If other masters are present in the system, some of these might transmit data to the TWI, and then SR mode would be used. It is the application software that decides which modes are legal.

The following sections describe each of these modes. Possible status codes are described along with figures detailing data transmission in each of the modes. These figures contain the following abbreviations:

S: START condition

Rs: REPEATED START condition

R: Read bit (high level at SDA)

W: Write bit (low level at SDA)

A: Acknowledge bit (low level at SDA)

$\overline{A}$: Not acknowledge bit (high level at SDA)

Data: 8-bit data byte

P: STOP condition

SLA: Slave Address

In Figure 24-12 on page 250 to Figure 24-18 on page 258, circles are used to indicate that the TWINT Flag is set. The numbers in the circles show the status code held in TWSR, with the prescaler bits masked to zero. At these points, actions must be taken by the application to continue or complete the TWI transfer. The TWI transfer is suspended until the TWINT Flag is cleared by software.

When the TWINT Flag is set, the status code in TWSR is used to determine the appropriate software action. For each status code, the required software action and details of the following serial transfer are given in Table 24-2 on page 249 to Table 24-5 on page 257. Note that the prescaler bits are masked to zero in these tables.

24.7.1 Master Transmitter Mode

In the Master Transmitter mode, a number of data bytes are transmitted to a Slave Receiver (see Figure 24-11). In order to enter a Master mode, a START condition must be transmitted. The format of the following address packet determines whether Master Transmitter or Master Receiver mode is to be entered. If SLA+W is transmitted, MT mode is entered, if SLA+R is transmitted, MR mode is entered. All the status codes mentioned in this section assume that the prescaler bits are zero or are masked to zero.

Figure 24-11. Data Transfer in Master Transmitter Mode

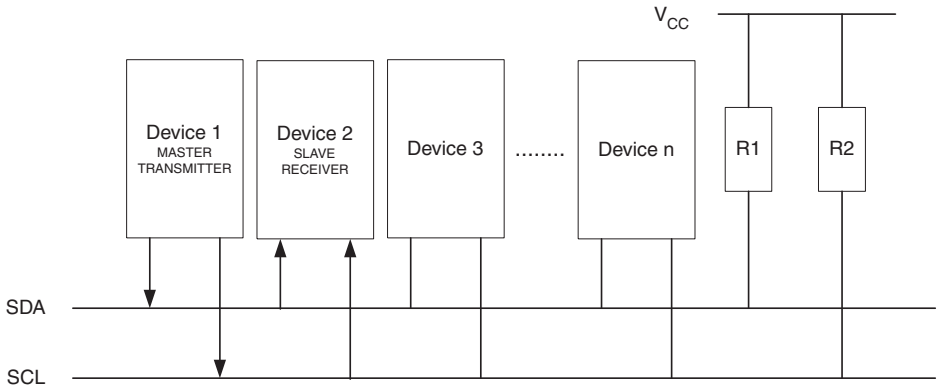

A START condition is sent by writing the following value to TWCR:

TWCR	TWINT	TWEA	TWSTA	TWSTO	TWWC	TWEN	–	TWIE
value	1	X	1	0	X	1	0	X

TWEN must be set to enable the 2-wire Serial Interface, TWSTA must be written to one to transmit a START condition and TWINT must be written to one to clear the TWINT Flag. The TWI will then test the 2-wire Serial Bus and generate a START condition as soon as the bus becomes free. After a START condition has been transmitted, the TWINT Flag is set by hardware, and the status code in TWSR will be 0x08 (see Table 24-2 on page 249). In order to enter MT mode, SLA+W must be transmitted. This is done by writing SLA+W to TWDR. Thereafter the TWINT bit should be cleared (by writing it to one) to continue the transfer. This is accomplished by writing the following value to TWCR:

TWCR	TWINT	TWEA	TWSTA	TWSTO	TWWC	TWEN	–	TWIE
value	1	X	0	0	X	1	0	X

When SLA+W have been transmitted and an acknowledgement bit has been received, TWINT is set again and a number of status codes in TWSR are possible. Possible status codes in Master mode are 0x18, 0x20, or 0x38. The appropriate action to be taken for each of these status codes is detailed in Table 24-2 on page 249.

When SLA+W has been successfully transmitted, a data packet should be transmitted. This is done by writing the data byte to TWDR. TWDR must only be written when TWINT is high. If not, the access will be discarded, and the Write Collision bit (TWWC) will be set in the TWCR Register. After updating TWDR, the TWINT bit should be cleared (by writing it to one) to continue the transfer. This is accomplished by writing the following value to TWCR:

TWCR	TWINT	TWEA	TWSTA	TWSTO	TWWC	TWEN	–	TWIE
value	1	X	0	0	X	1	0	X

This scheme is repeated until the last byte has been sent and the transfer is ended by generating a STOP condition or a repeated START condition. A STOP condition is generated by writing the following value to TWCR:

TWCR	TWINT	TWEA	TWSTA	TWSTO	TWWC	TWEN	–	TWIE
value	1	X	0	1	X	1	0	X

A REPEATED START condition is generated by writing the following value to TWCR:

TWCR	TWINT	TWEA	TWSTA	TWSTO	TWWC	TWEN	–	TWIE
value	1	X	1	0	X	1	0	X

After a repeated START condition (state 0x10) the 2-wire Serial Interface can access the same Slave again, or a new Slave without transmitting a STOP condition. Repeated START enables the Master to switch between Slaves, Master Transmitter mode and Master Receiver mode without losing control of the bus.

Table 24-2. Status codes for Master Transmitter Mode

Status Code (TWSR) Prescaler Bits are 0	Status of the 2-wire Serial Bus and 2-wire Serial Interface Hardware	Application Software Response					Next Action Taken by TWI Hardware
		To/from TWDR	To TWCR				
			STA	STO	TWINT	TWEA	
0x08	A START condition has been transmitted	Load SLA+W	0	0	1	X	SLA+W will be transmitted; ACK or NOT ACK will be received
0x10	A repeated START condition has been transmitted	Load SLA+W or	0	0	1	X	SLA+W will be transmitted; ACK or NOT ACK will be received
		Load SLA+R	0	0	1	X	SLA+R will be transmitted; Logic will switch to Master Receiver mode
0x18	SLA+W has been transmitted; ACK has been received	Load data byte or	0	0	1	X	Data byte will be transmitted and ACK or NOT ACK will be received
		No TWDR action or	1	0	1	X	Repeated START will be transmitted
		No TWDR action or	0	1	1	X	STOP condition will be transmitted and TWSTO Flag will be reset
		No TWDR action	1	1	1	X	STOP condition followed by a START condition will be transmitted and TWSTO Flag will be reset
0x20	SLA+W has been transmitted; NOT ACK has been received	Load data byte or	0	0	1	X	Data byte will be transmitted and ACK or NOT ACK will be received
		No TWDR action or	1	0	1	X	Repeated START will be transmitted
		No TWDR action or	0	1	1	X	STOP condition will be transmitted and TWSTO Flag will be reset
		No TWDR action	1	1	1	X	STOP condition followed by a START condition will be transmitted and TWSTO Flag will be reset
0x28	Data byte has been transmitted; ACK has been received	Load data byte or	0	0	1	X	Data byte will be transmitted and ACK or NOT ACK will be received
		No TWDR action or	1	0	1	X	Repeated START will be transmitted
		No TWDR action or	0	1	1	X	STOP condition will be transmitted and TWSTO Flag will be reset
		No TWDR action	1	1	1	X	STOP condition followed by a START condition will be transmitted and TWSTO Flag will be reset
0x30	Data byte has been transmitted; NOT ACK has been received	Load data byte or	0	0	1	X	Data byte will be transmitted and ACK or NOT ACK will be received
		No TWDR action or	1	0	1	X	Repeated START will be transmitted
		No TWDR action or	0	1	1	X	STOP condition will be transmitted and TWSTO Flag will be reset
		No TWDR action	1	1	1	X	STOP condition followed by a START condition will be transmitted and TWSTO Flag will be reset
0x38	Arbitration lost in SLA+W or data bytes	No TWDR action or	0	0	1	X	2-wire Serial Bus will be released and not addressed Slave mode entered
		No TWDR action	1	0	1	X	A START condition will be transmitted when the bus becomes free

Figure 24-12. Formats and States in the Master Transmitter Mode

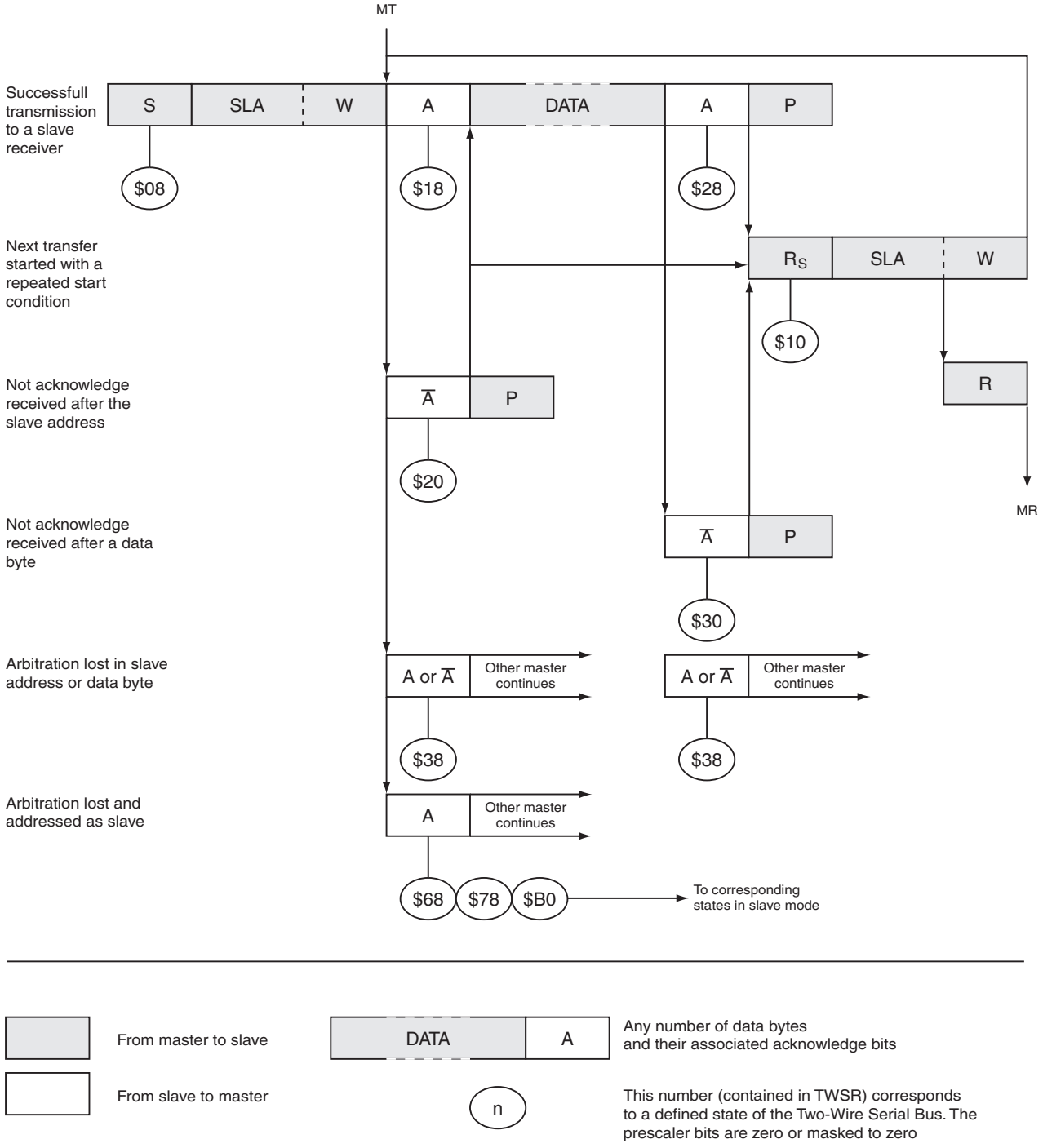

24.7.2 Master Receiver Mode

In the Master Receiver mode, a number of data bytes are received from a Slave Transmitter (see Figure 24-13 on page 251). In order to enter a Master mode, a START condition must be transmitted. The format of the following address packet determines whether Master Transmitter or Master Receiver mode is to be entered. If SLA+W is transmitted, MT mode is entered, if SLA+R is transmitted, MR mode is entered. All the status codes mentioned in this section assume that the prescaler bits are zero or are masked to zero.

Figure 24-13. Data Transfer in Master Receiver Mode

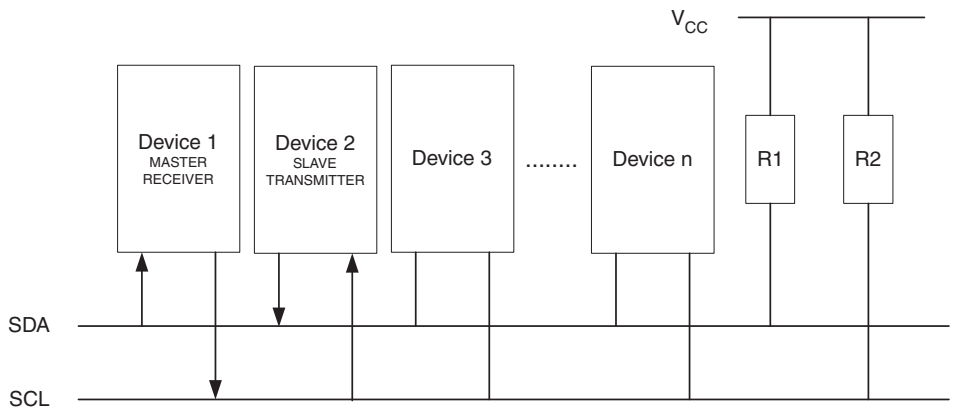

A START condition is sent by writing the following value to TWCR:

TWCR	TWINT	TWEA	TWSTA	TWSTO	TWWC	TWEN	–	TWIE
value	1	X	1	0	X	1	0	X

TWEN must be written to one to enable the 2-wire Serial Interface, TWSTA must be written to one to transmit a START condition and TWINT must be set to clear the TWINT Flag. The TWI will then test the 2-wire Serial Bus and generate a START condition as soon as the bus becomes free. After a START condition has been transmitted, the TWINT Flag is set by hardware, and the status code in TWSR will be 0x08 (see Table 24-2 on page 249). In order to enter MR mode, SLA+R must be transmitted. This is done by writing SLA+R to TWDR. Thereafter the TWINT bit should be cleared (by writing it to one) to continue the transfer. This is accomplished by writing the following value to TWCR:

TWCR	TWINT	TWEA	TWSTA	TWSTO	TWWC	TWEN	–	TWIE
value	1	X	0	0	X	1	0	X

When SLA+R have been transmitted and an acknowledgement bit has been received, TWINT is set again and a number of status codes in TWSR are possible. Possible status codes in Master mode are 0x38, 0x40, or 0x48. The appropriate action to be taken for each of these status codes is detailed in Table 24-3 on page 252. Received data can be read from the TWDR Register when the TWINT Flag is set high by hardware. This scheme is repeated until the last byte has been received. After the last byte has been received, the MR should inform the ST by sending a NACK after the last received data byte. The transfer is ended by generating a STOP condition or a repeated START condition. A STOP condition is generated by writing the following value to TWCR:

TWCR	TWINT	TWEA	TWSTA	TWSTO	TWWC	TWEN	–	TWIE
value	1	X	0	1	X	1	0	X

A REPEATED START condition is generated by writing the following value to TWCR:

TWCR	TWINT	TWEA	TWSTA	TWSTO	TWWC	TWEN	–	TWIE
value	1	X	1	0	X	1	0	X

After a repeated START condition (state 0x10) the 2-wire Serial Interface can access the same Slave again, or a new Slave without transmitting a STOP condition. Repeated START enables the Master to switch between Slaves, Master Transmitter mode and Master Receiver mode without losing control over the bus.

Table 24-3. Status codes for Master Receiver Mode

Status Code (TWSR) Prescaler Bits are 0	Status of the 2-wire Serial Bus and 2-wire Serial Interface Hardware	Application Software Response					Next Action Taken by TWI Hardware
		To/from TWDR	To TWCR				
			STA	STO	TWINT	TWEA	
0x08	A START condition has been transmitted	Load SLA+R	0	0	1	X	SLA+R will be transmitted ACK or NOT ACK will be received
0x10	A repeated START condition has been transmitted	Load SLA+R or	0	0	1	X	SLA+R will be transmitted ACK or NOT ACK will be received
		Load SLA+W	0	0	1	X	SLA+W will be transmitted Logic will switch to Master Transmitter mode
0x38	Arbitration lost in SLA+R or NOT ACK bit	No TWDR action or	0	0	1	X	2-wire Serial Bus will be released and not addressed Slave mode will be entered
		No TWDR action	1	0	1	X	A START condition will be transmitted when the bus becomes free
0x40	SLA+R has been transmitted; ACK has been received	No TWDR action or	0	0	1	0	Data byte will be received and NOT ACK will be returned
		No TWDR action	0	0	1	1	Data byte will be received and ACK will be returned
0x48	SLA+R has been transmitted; NOT ACK has been received	No TWDR action or	1	0	1	X	Repeated START will be transmitted
		No TWDR action or	0	1	1	X	STOP condition will be transmitted and TWSTO Flag will be reset
		No TWDR action	1	1	1	X	STOP condition followed by a START condition will be transmitted and TWSTO Flag will be reset
0x50	Data byte has been received; ACK has been returned	Read data byte or	0	0	1	0	Data byte will be received and NOT ACK will be returned
		Read data byte	0	0	1	1	Data byte will be received and ACK will be returned
0x58	Data byte has been received; NOT ACK has been returned	Read data byte or	1	0	1	X	Repeated START will be transmitted
		Read data byte or	0	1	1	X	STOP condition will be transmitted and TWSTO Flag will be reset
		Read data byte	1	1	1	X	STOP condition followed by a START condition will be transmitted and TWSTO Flag will be reset

Figure 24-14. Formats and States in the Master Receiver Mode

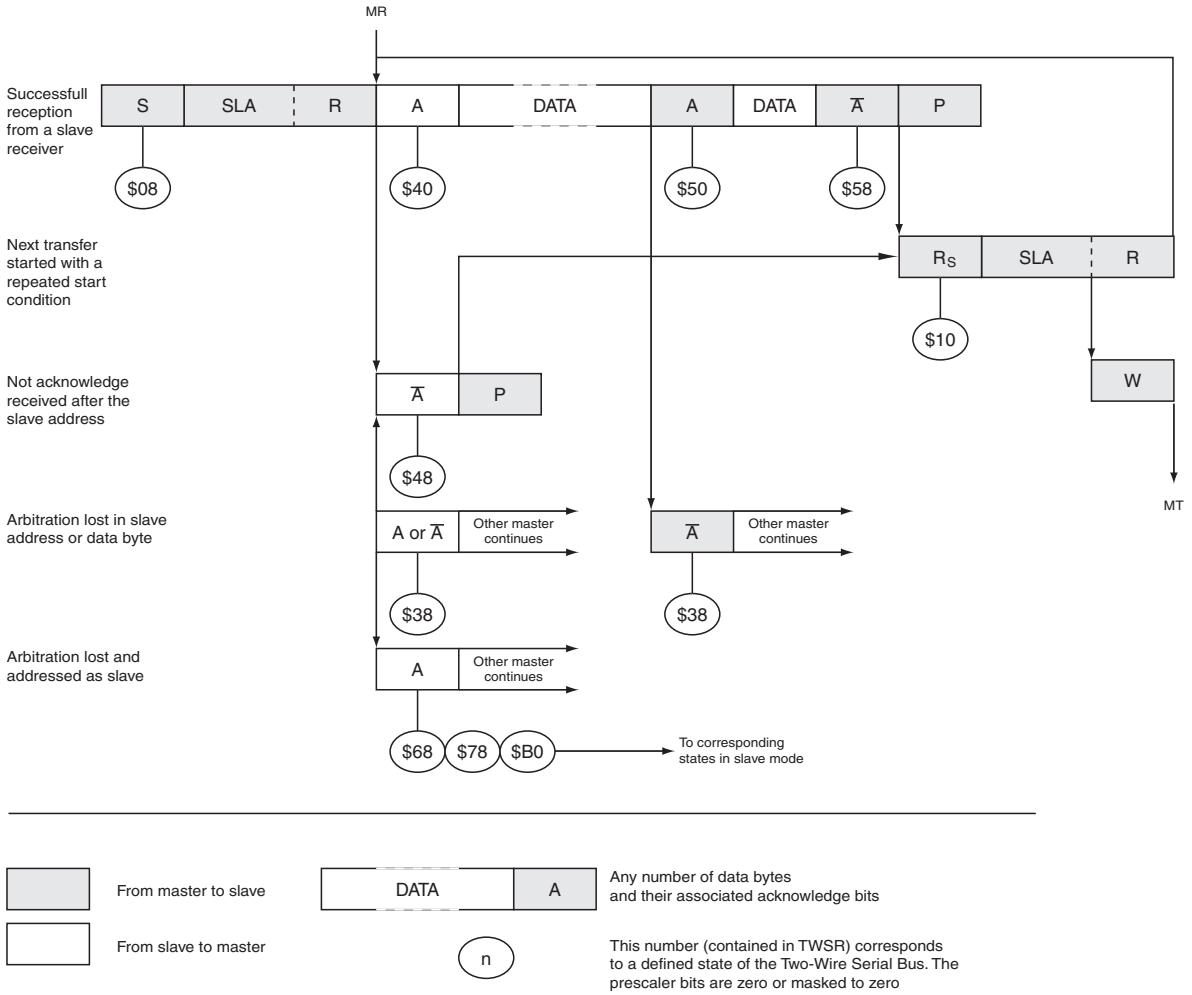

24.7.3 Slave Receiver Mode

In the Slave Receiver mode, a number of data bytes are received from a Master Transmitter (see Figure 24-15). All the status codes mentioned in this section assume that the prescaler bits are zero or are masked to zero.

Figure 24-15. Data transfer in Slave Receiver mode

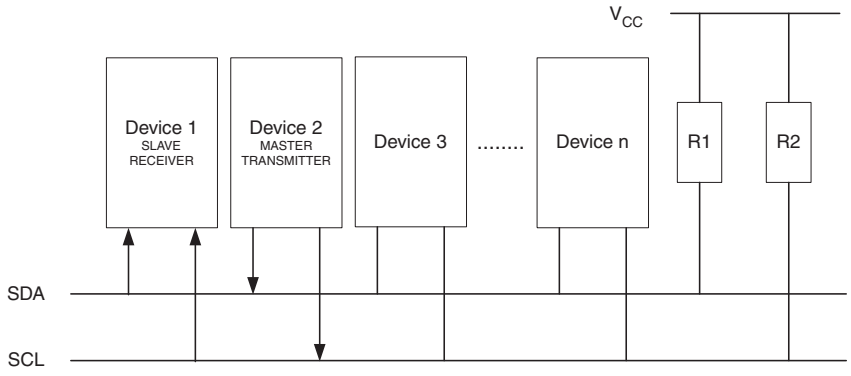

To initiate the Slave Receiver mode, TWAR and TWCR must be initialized as follows:

TWAR	TWA6	TWA5	TWA4	TWA3	TWA2	TWA1	TWA0	TWGCE
value	Device's Own Slave Address							

The upper seven bits are the address to which the 2-wire Serial Interface will respond when addressed by a Master. If the LSB is set, the TWI will respond to the general call address (0x00), otherwise it will ignore the general call address.

TWCR	TWINT	TWEA	TWSTA	TWSTO	TWWC	TWEN	–	TWIE
value	0	1	0	0	0	1	0	X

TWEN must be written to one to enable the TWI. The TWEA bit must be written to one to enable the acknowledgement of the device's own slave address or the general call address. TWSTA and TWSTO must be written to zero.

When TWAR and TWCR have been initialized, the TWI waits until it is addressed by its own slave address (or the general call address if enabled) followed by the data direction bit. If the direction bit is "0" (write), the TWI will operate in SR mode, otherwise ST mode is entered. After its own slave address and the write bit have been received, the TWINT Flag is set and a valid status code can be read from TWSR. The status code is used to determine the appropriate software action. The appropriate action to be taken for each status code is detailed in Table 24-4 on page 255. The Slave Receiver mode may also be entered if arbitration is lost while the TWI is in the Master mode (see states 0x68 and 0x78).

If the TWEA bit is reset during a transfer, the TWI will return a "Not Acknowledge" ("1") to SDA after the next received data byte. This can be used to indicate that the Slave is not able to receive any more bytes. While TWEA is zero, the TWI does not acknowledge its own slave address. However, the 2-wire Serial Bus is still monitored and address recognition may resume at any time by setting TWEA. This implies that the TWEA bit may be used to temporarily isolate the TWI from the 2-wire Serial Bus.

In all sleep modes other than Idle mode, the clock system to the TWI is turned off. If the TWEA bit is set, the interface can still acknowledge its own slave address or the general call address by using the 2-wire Serial Bus clock as a clock source. The part will then wake up from sleep and the TWI will hold the SCL clock low during the wake up and until the TWINT Flag is cleared (by writing it to one). Further data reception will be carried out as normal, with the AVR clocks running as normal. Observe that if the AVR is set up with a long start-up time, the SCL line may be held low for a long time, blocking other data transmissions.

Note that the 2-wire Serial Interface Data Register – TWDR does not reflect the last byte present on the bus when waking up from these Sleep modes.

Table 24-4. Status Codes for Slave Receiver Mode

Status Code (TWSR) Prescaler Bits are 0	Status of the 2-wire Serial Bus and 2-wire Serial Interface Hardware	Application Software Response					Next Action Taken by TWI Hardware
		To/from TWDR	To TWCR				
			STA	STO	TWINT	TWEA	
0x60	Own SLA+W has been received; ACK has been returned	No TWDR action or	X	0	1	0	Data byte will be received and NOT ACK will be returned
		No TWDR action	X	0	1	1	Data byte will be received and ACK will be returned
0x68	Arbitration lost in SLA+R/W as Master; own SLA+W has been received; ACK has been returned	No TWDR action or	X	0	1	0	Data byte will be received and NOT ACK will be returned
		No TWDR action	X	0	1	1	Data byte will be received and ACK will be returned
0x70	General call address has been received; ACK has been returned	No TWDR action or	X	0	1	0	Data byte will be received and NOT ACK will be returned
		No TWDR action	X	0	1	1	Data byte will be received and ACK will be returned
0x78	Arbitration lost in SLA+R/W as Master; General call address has been received; ACK has been returned	No TWDR action or	X	0	1	0	Data byte will be received and NOT ACK will be returned
		No TWDR action	X	0	1	1	Data byte will be received and ACK will be returned
0x80	Previously addressed with own SLA+W; data has been received; ACK has been returned	Read data byte or	X	0	1	0	Data byte will be received and NOT ACK will be returned
		Read data byte	X	0	1	1	Data byte will be received and ACK will be returned
0x88	Previously addressed with own SLA+W; data has been received; NOT ACK has been returned	Read data byte or	0	0	1	0	Switched to the not addressed Slave mode; no recognition of own SLA or GCA
		Read data byte or	0	0	1	1	Switched to the not addressed Slave mode; own SLA will be recognized; GCA will be recognized if TWGCE = “1”
		Read data byte or	1	0	1	0	Switched to the not addressed Slave mode; no recognition of own SLA or GCA; a START condition will be transmitted when the bus becomes free
		Read data byte	1	0	1	1	Switched to the not addressed Slave mode; own SLA will be recognized; GCA will be recognized if TWGCE = “1”; a START condition will be transmitted when the bus becomes free
0x90	Previously addressed with general call; data has been received; ACK has been returned	Read data byte or	X	0	1	0	Data byte will be received and NOT ACK will be returned
		Read data byte	X	0	1	1	Data byte will be received and ACK will be returned
0x98	Previously addressed with general call; data has been received; NOT ACK has been returned	Read data byte or	0	0	1	0	Switched to the not addressed Slave mode; no recognition of own SLA or GCA
		Read data byte or	0	0	1	1	Switched to the not addressed Slave mode; own SLA will be recognized; GCA will be recognized if TWGCE = “1”
		Read data byte or	1	0	1	0	Switched to the not addressed Slave mode; no recognition of own SLA or GCA; a START condition will be transmitted when the bus becomes free
		Read data byte	1	0	1	1	Switched to the not addressed Slave mode; own SLA will be recognized; GCA will be recognized if TWGCE = “1”; a START condition will be transmitted when the bus becomes free
0xA0	A STOP condition or repeated START condition has been received while still addressed as Slave	No action	0	0	1	0	Switched to the not addressed Slave mode; no recognition of own SLA or GCA
			0	0	1	1	Switched to the not addressed Slave mode; own SLA will be recognized; GCA will be recognized if TWGCE = “1”
			1	0	1	0	Switched to the not addressed Slave mode; no recognition of own SLA or GCA; a START condition will be transmitted when the bus becomes free
			1	0	1	1	Switched to the not addressed Slave mode; own SLA will be recognized; GCA will be recognized if TWGCE = “1”; a START condition will be transmitted when the bus becomes free

Figure 24-16. Formats and States in the Slave Receiver Mode

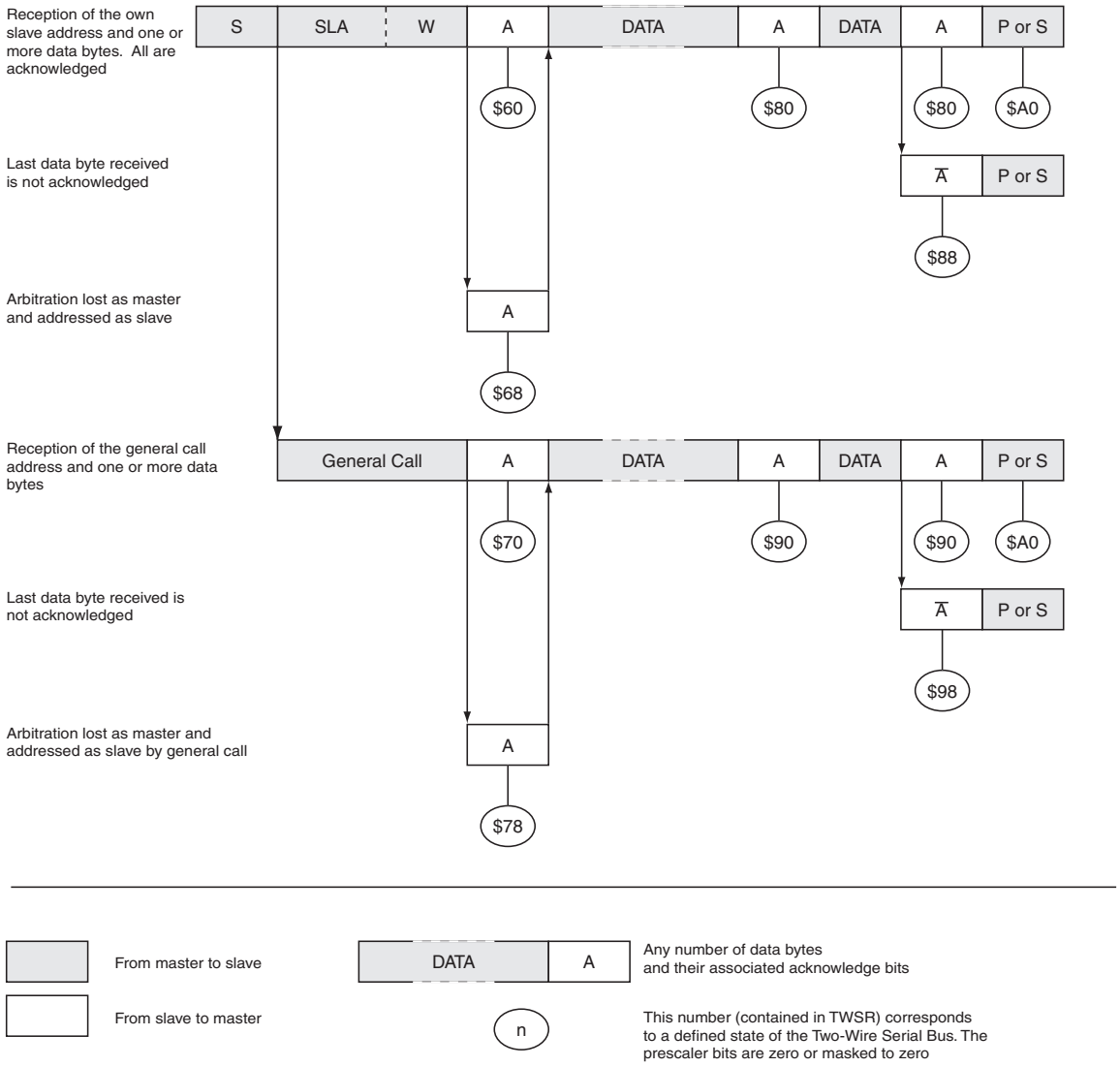

24.7.4 Slave Transmitter Mode

In the Slave Transmitter mode, a number of data bytes are transmitted to a Master Receiver (see Figure 24-17). All the status codes mentioned in this section assume that the prescaler bits are zero or are masked to zero.

Figure 24-17. Data Transfer in Slave Transmitter Mode

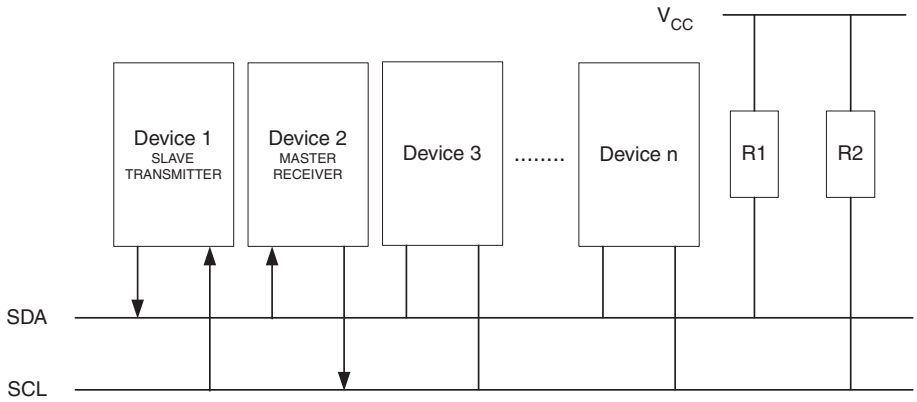

To initiate the Slave Transmitter mode, TWAR and TWCR must be initialized as follows:

TWAR	TWA6	TWA5	TWA4	TWA3	TWA2	TWA1	TWA0	TWGCE
value	Device's Own Slave Address							

The upper seven bits are the address to which the 2-wire Serial Interface will respond when addressed by a Master. If the LSB is set, the TWI will respond to the general call address (0x00), otherwise it will ignore the general call address.

TWCR	TWINT	TWEA	TWSTA	TWSTO	TWWC	TWEN	–	TWIE
value	0	1	0	0	0	1	0	X

TWEN must be written to one to enable the TWI. The TWEA bit must be written to one to enable the acknowledgement of the device's own slave address or the general call address. TWSTA and TWSTO must be written to zero.

When TWAR and TWCR have been initialized, the TWI waits until it is addressed by its own slave address (or the general call address if enabled) followed by the data direction bit. If the direction bit is "1" (read), the TWI will operate in ST mode, otherwise SR mode is entered. After its own slave address and the write bit have been received, the TWINT Flag is set and a valid status code can be read from TWSR. The status code is used to determine the appropriate software action. The appropriate action to be taken for each status code is detailed in Table 24-5. The Slave Transmitter mode may also be entered if arbitration is lost while the TWI is in the Master mode (see state 0xB0).

If the TWEA bit is written to zero during a transfer, the TWI will transmit the last byte of the transfer. State 0xC0 or state 0xC8 will be entered, depending on whether the Master Receiver transmits a NACK or ACK after the final byte. The TWI is switched to the not addressed Slave mode, and will ignore the Master if it continues the transfer. Thus the Master Receiver receives all "1" as serial data. State 0xC8 is entered if the Master demands additional data bytes (by transmitting ACK), even though the Slave has transmitted the last byte (TWEA zero and expecting NACK from the Master).

While TWEA is zero, the TWI does not respond to its own slave address. However, the 2-wire Serial Bus is still monitored and address recognition may resume at any time by setting TWEA. This implies that the TWEA bit may be used to temporarily isolate the TWI from the 2-wire Serial Bus.

In all sleep modes other than Idle mode, the clock system to the TWI is turned off. If the TWEA bit is set, the interface can still acknowledge its own slave address or the general call address by using the 2-wire Serial Bus clock as a clock source. The part will then wake up from sleep and the TWI will hold the SCL clock will low during the wake up and until the TWINT Flag is cleared (by writing it to one). Further data transmission will be carried out as normal, with the AVR clocks running as normal. Observe that if the AVR is set up with a long start-up time, the SCL line may be held low for a long time, blocking other data transmissions.

Note that the 2-wire Serial Interface Data Register – TWDR does not reflect the last byte present on the bus when waking up from these sleep modes.

Table 24-5. Status Codes for Slave Transmitter Mode

Status Code (TWSR) Prescaler Bits are 0	Status of the 2-wire Serial Bus and 2-wire Serial Interface Hardware	Application Software Response					Next Action Taken by TWI Hardware
		To/from TWDR	To TWCR				
			STA	STO	TWINT	TWEA	
0xA8	Own SLA+R has been received; ACK has been returned	Load data byte or	X	0	1	0	Last data byte will be transmitted and NOT ACK should be received
		Load data byte	X	0	1	1	Data byte will be transmitted and ACK should be received
0xB0	Arbitration lost in SLA+R/W as Master; own SLA+R has been received; ACK has been returned	Load data byte or	X	0	1	0	Last data byte will be transmitted and NOT ACK should be received
		Load data byte	X	0	1	1	Data byte will be transmitted and ACK should be received

Table 24-5. Status Codes for Slave Transmitter Mode (Continued)

0xB8	Data byte in TWDR has been transmitted; ACK has been received	Load data byte or	X	0	1	0	Last data byte will be transmitted and NOT ACK should be received
		Load data byte	X	0	1	1	Data byte will be transmitted and ACK should be received
0xC0	Data byte in TWDR has been transmitted; NOT ACK has been received	No TWDR action or	0	0	1	0	Switched to the not addressed Slave mode; no recognition of own SLA or GCA
		No TWDR action or	0	0	1	1	Switched to the not addressed Slave mode; own SLA will be recognized; GCA will be recognized if TWGCE = “1”
		No TWDR action or	1	0	1	0	Switched to the not addressed Slave mode; no recognition of own SLA or GCA; a START condition will be transmitted when the bus becomes free
		No TWDR action	1	0	1	1	Switched to the not addressed Slave mode; own SLA will be recognized; GCA will be recognized if TWGCE = “1”; a START condition will be transmitted when the bus becomes free
0xC8	Last data byte in TWDR has been transmitted (TWEA = “0”); ACK has been received	No TWDR action or	0	0	1	0	Switched to the not addressed Slave mode; no recognition of own SLA or GCA
		No TWDR action or	0	0	1	1	Switched to the not addressed Slave mode; own SLA will be recognized; GCA will be recognized if TWGCE = “1”
		No TWDR action or	1	0	1	0	Switched to the not addressed Slave mode; no recognition of own SLA or GCA; a START condition will be transmitted when the bus becomes free
		No TWDR action	1	0	1	1	Switched to the not addressed Slave mode; own SLA will be recognized; GCA will be recognized if TWGCE = “1”; a START condition will be transmitted when the bus becomes free

Figure 24-18. Formats and States in the Slave Transmitter Mode

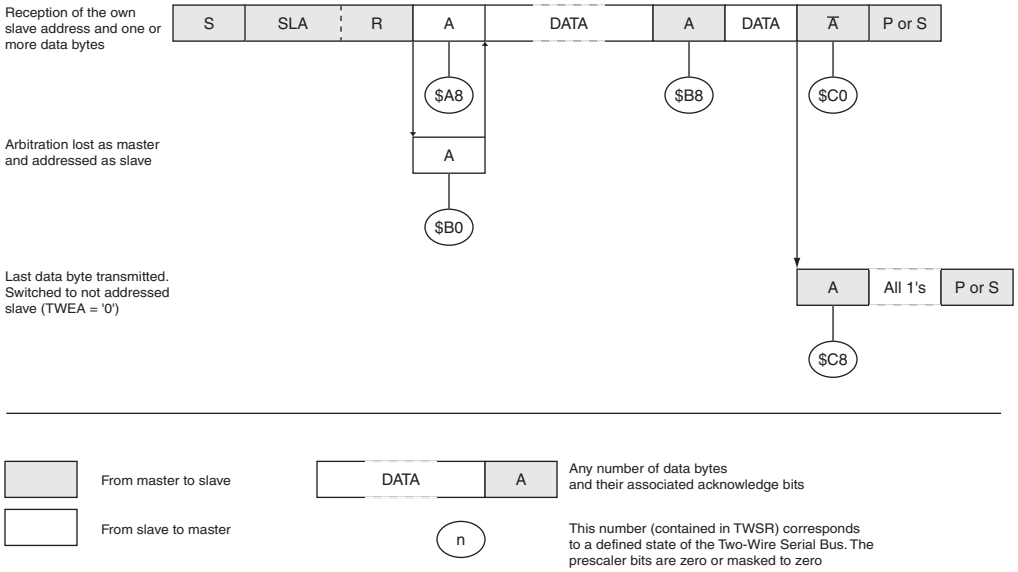

24.7.5 Miscellaneous States

There are two status codes that do not correspond to a defined TWI state, see Table 24-6 on page 259.

Status 0xF8 indicates that no relevant information is available because the TWINT Flag is not set. This occurs between other states, and when the TWI is not involved in a serial transfer.

Status 0x00 indicates that a bus error has occurred during a 2-wire Serial Bus transfer. A bus error occurs when a START or STOP condition occurs at an illegal position in the format frame. Examples of such illegal positions are during the serial transfer of an address byte, a data byte, or an acknowledge bit. When a bus error occurs, TWINT is set. To recover from a bus error, the TWSTO Flag must set and TWINT must be cleared by writing a logic one to

it. This causes the TWI to enter the not addressed Slave mode and to clear the TWSTO Flag (no other bits in TWCR are affected). The SDA and SCL lines are released, and no STOP condition is transmitted.

Table 24-6. Miscellaneous States

Status Code (TWSR) Prescaler Bits are 0	Status of the 2-wire Serial Bus and 2-wire Serial Interface Hardware	Application Software Response					Next Action Taken by TWI Hardware
		To/from TWDR	To TWCR				
			STA	STO	TWINT	TWEA	
0xF8	No relevant state information available; TWINT = “0”	No TWDR action	No TWCR action				Wait or proceed current transfer
0x00	Bus error due to an illegal START or STOP condition	No TWDR action	0	1	1	X	Only the internal hardware is affected, no STOP condition is sent on the bus. In all cases, the bus is released and TWSTO is cleared.

24.7.6 Combining Several TWI Modes

In some cases, several TWI modes must be combined in order to complete the desired action. Consider for example reading data from a serial EEPROM. Typically, such a transfer involves the following steps:

1. The transfer must be initiated.
2. The EEPROM must be instructed what location should be read.
3. The reading must be performed.
4. The transfer must be finished.

Note that data is transmitted both from Master to Slave and vice versa. The Master must instruct the Slave what location it wants to read, requiring the use of the MT mode. Subsequently, data must be read from the Slave, implying the use of the MR mode. Thus, the transfer direction must be changed. The Master must keep control of the bus during all these steps, and the steps should be carried out as an atomical operation. If this principle is violated in a multimaster system, another Master can alter the data pointer in the EEPROM between steps 2 and 3, and the Master will read the wrong data location. Such a change in transfer direction is accomplished by transmitting a REPEATED START between the transmission of the address byte and reception of the data. After a REPEATED START, the Master keeps ownership of the bus. The following figure shows the flow in this transfer.

Figure 24-19. Combining Several TWI Modes to Access a Serial EEPROM

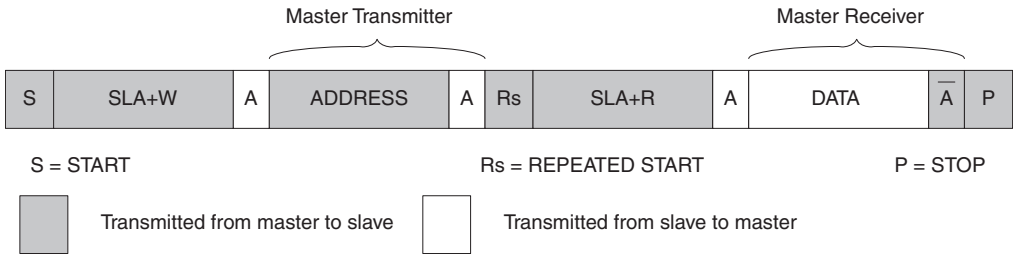

24.8 Multi-master Systems and Arbitration

If multiple masters are connected to the same bus, transmissions may be initiated simultaneously by one or more of them. The TWI standard ensures that such situations are handled in such a way that one of the masters will be allowed to proceed with the transfer, and that no data will be lost in the process. An example of an arbitration situation is depicted below, where two masters are trying to transmit data to a Slave Receiver.

Figure 24-20. An Arbitration Example

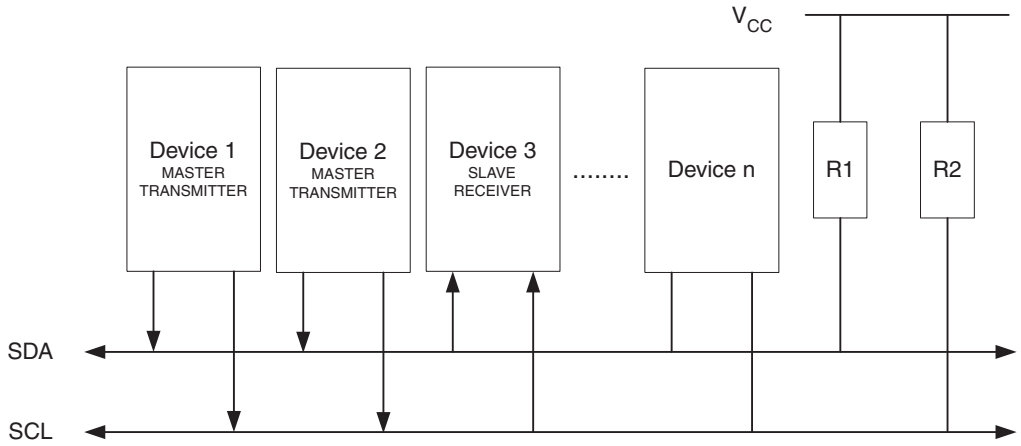

Several different scenarios may arise during arbitration, as described below:

- Two or more masters are performing identical communication with the same Slave. In this case, neither the Slave nor any of the masters will know about the bus contention.
- Two or more masters are accessing the same Slave with different data or direction bit. In this case, arbitration will occur, either in the READ/WRITE bit or in the data bits. The masters trying to output a one on SDA while another Master outputs a zero will lose the arbitration. Losing masters will switch to not addressed Slave mode or wait until the bus is free and transmit a new START condition, depending on application software action.
- Two or more masters are accessing different slaves. In this case, arbitration will occur in the SLA bits. Masters trying to output a one on SDA while another Master outputs a zero will lose the arbitration. Masters losing arbitration in SLA will switch to Slave mode to check if they are being addressed by the winning Master. If addressed, they will switch to SR or ST mode, depending on the value of the READ/WRITE bit. If they are not being addressed, they will switch to not addressed Slave mode or wait until the bus is free and transmit a new START condition, depending on application software action.

This is summarized in Figure 24-21. Possible status values are given in circles.

Figure 24-21. Possible Status Codes Caused by Arbitration

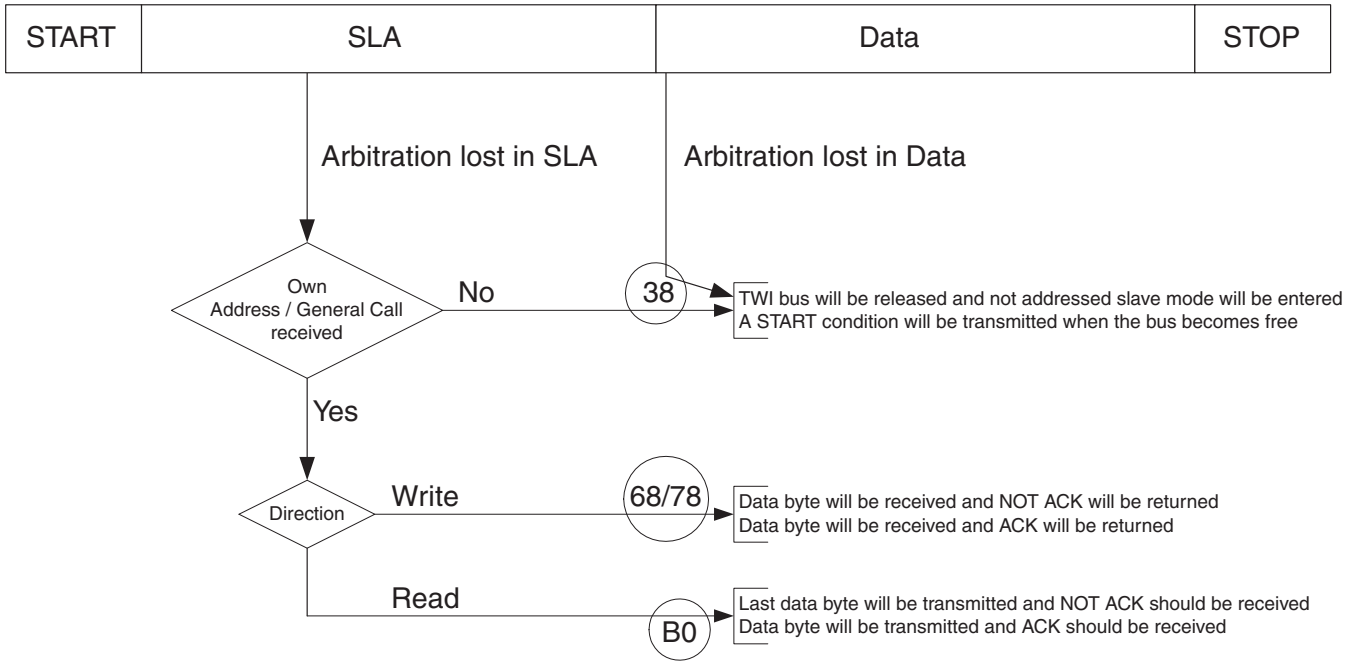

24.9 Register Description

24.9.1 TWBR – TWI Bit Rate Register

Bit	7	6	5	4	3	2	1	0	
(0xB8)	**TWBR7**	**TWBR6**	**TWBR5**	**TWBR4**	**TWBR3**	**TWBR2**	**TWBR1**	**TWBR0**	**TWBR**
Read/Write	R/W	R/W	R/W	R/W	R/W	R/W	R/W	R/W	
Initial Value	0	0	0	0	0	0	0	0	

- **Bits 7:0 – TWI Bit Rate Register**

TWBR selects the division factor for the bit rate generator. The bit rate generator is a frequency divider which generates the SCL clock frequency in the Master modes. See "Bit Rate Generator Unit" on page 242 for calculating bit rates.

24.9.2 TWCR – TWI Control Register

Bit	7	6	5	4	3	2	1	0	
(0xBC)	**TWINT**	**TWEA**	**TWSTA**	**TWSTO**	**TWWC**	**TWEN**	**–**	**TWIE**	**TWCR**
Read/Write	R/W	R/W	R/W	R/W	R	R/W	R	R/W	
Initial Value	0	0	0	0	0	0	0	0	

The TWCR is used to control the operation of the TWI. It is used to enable the TWI, to initiate a Master access by applying a START condition to the bus, to generate a Receiver acknowledge, to generate a stop condition, and to control halting of the bus while the data to be written to the bus are written to the TWDR. It also indicates a write collision if data is attempted written to TWDR while the register is inaccessible.

- **Bit 7 – TWINT: TWI Interrupt Flag**

This bit is set by hardware when the TWI has finished its current job and expects application software response. If the I-bit in SREG and TWIE in TWCR are set, the MCU will jump to the TWI Interrupt Vector. While the TWINT Flag is set, the SCL low period is stretched. The TWINT Flag must be cleared by software by writing a logic one to it. Note that this flag is not automatically cleared by hardware when executing the interrupt routine. Also note that clearing this flag starts the operation of the TWI, so all accesses to the TWI Address Register (TWAR), TWI Status Register (TWSR), and TWI Data Register (TWDR) must be complete before clearing this flag.

- **Bit 6 – TWEA: TWI Enable Acknowledge Bit**

The TWEA bit controls the generation of the acknowledge pulse. If the TWEA bit is written to one, the ACK pulse is generated on the TWI bus if the following conditions are met:

1. The device's own slave address has been received.
2. A general call has been received, while the TWGCE bit in the TWAR is set.
3. A data byte has been received in Master Receiver or Slave Receiver mode.

By writing the TWEA bit to zero, the device can be virtually disconnected from the 2-wire Serial Bus temporarily. Address recognition can then be resumed by writing the TWEA bit to one again.

- **Bit 5 – TWSTA: TWI START Condition Bit**

The application writes the TWSTA bit to one when it desires to become a Master on the 2-wire Serial Bus. The TWI hardware checks if the bus is available, and generates a START condition on the bus if it is free. However, if the bus is not free, the TWI waits until a STOP condition is detected, and then generates a new START condition to claim the bus Master status. TWSTA must be cleared by software when the START condition has been transmitted.

- **Bit 4 – TWSTO: TWI STOP Condition Bit**

Writing the TWSTO bit to one in Master mode will generate a STOP condition on the 2-wire Serial Bus. When the STOP condition is executed on the bus, the TWSTO bit is cleared automatically. In Slave mode, setting the TWSTO bit can be used to recover from an error condition. This will not generate a STOP condition, but the TWI returns to a well-defined unaddressed Slave mode and releases the SCL and SDA lines to a high impedance state.

- **Bit 3 – TWWC: TWI Write Collision Flag**

The TWWC bit is set when attempting to write to the TWI Data Register – TWDR when TWINT is low. This flag is cleared by writing the TWDR Register when TWINT is high.

- **Bit 2 – TWEN: TWI Enable Bit**

The TWEN bit enables TWI operation and activates the TWI interface. When TWEN is written to one, the TWI takes control over the I/O pins connected to the SCL and SDA pins, enabling the slew-rate limiters and spike filters. If this bit is written to zero, the TWI is switched off and all TWI transmissions are terminated, regardless of any ongoing operation.

- **Bit 1 – Res: Reserved Bit**

This bit is a reserved bit and will always read as zero.

- **Bit 0 – TWIE: TWI Interrupt Enable**

When this bit is written to one, and the I-bit in SREG is set, the TWI interrupt request will be activated for as long as the TWINT Flag is high.

24.9.3 TWSR – TWI Status Register

Bit	7	6	5	4	3	2	1	0	
(0xB9)	**TWS7**	**TWS6**	**TWS5**	**TWS4**	**TWS3**	**–**	**TWPS1**	**TWPS0**	**TWSR**
Read/Write	R	R	R	R	R	R	R/W	R/W	
Initial Value	1	1	1	1	1	0	0	0	

- **Bits 7:3 – TWS: TWI Status**

These five bits reflect the status of the TWI logic and the 2-wire Serial Bus. The different status codes are described later in this section. Note that the value read from TWSR contains both the 5-bit status value and the 2-bit prescaler value. The application designer should mask the prescaler bits to zero when checking the Status bits. This makes status checking independent of prescaler setting. This approach is used in this datasheet, unless otherwise noted.

- **Bit 2 – Res: Reserved Bit**

This bit is reserved and will always read as zero.

- **Bits 1:0 – TWPS: TWI Prescaler Bits**

These bits can be read and written, and control the bit rate prescaler.

Table 24-7. TWI Bit Rate Prescaler

TWPS1	TWPS0	Prescaler Value
0	0	1
0	1	4
1	0	16
1	1	64

To calculate bit rates, see “Bit Rate Generator Unit” on page 242. The value of TWPS1:0 is used in the equation.

24.9.4 TWDR – TWI Data Register

Bit	7	6	5	4	3	2	1	0	
(0xBB)	**TWD7**	**TWD6**	**TWD5**	**TWD4**	**TWD3**	**TWD2**	**TWD1**	**TWD0**	**TWDR**
Read/Write	R/W	R/W	R/W	R/W	R/W	R/W	R/W	R/W	
Initial Value	1	1	1	1	1	1	1	1	

In Transmit mode, TWDR contains the next byte to be transmitted. In Receive mode, the TWDR contains the last byte received. It is writable while the TWI is not in the process of shifting a byte. This occurs when the TWI Interrupt Flag (TWINT) is set by hardware. Note that the Data Register cannot be initialized by the user before the first interrupt occurs. The data in TWDR remains stable as long as TWINT is set. While data is shifted out, data on the bus is simultaneously shifted in. TWDR always contains the last byte present on the bus, except after a wake up from a sleep mode by the TWI interrupt. In this case, the contents of TWDR is undefined. In the case of a lost bus arbitration, no data is lost in the transition from Master to Slave. Handling of the ACK bit is controlled automatically by the TWI logic, the CPU cannot access the ACK bit directly.

- **Bits 7:0 – TWD: TWI Data Register**

These eight bits constitute the next data byte to be transmitted, or the latest data byte received on the 2-wire Serial Bus.

24.9.5 TWAR – TWI (Slave) Address Register

Bit	7	6	5	4	3	2	1	0	
(0xBA)	**TWA6**	**TWA5**	**TWA4**	**TWA3**	**TWA2**	**TWA1**	**TWA0**	**TWGCE**	**TWAR**
Read/Write	R/W	R/W	R/W	R/W	R/W	R/W	R/W	R/W	
Initial Value	1	1	1	1	1	1	1	0	

The TWAR should be loaded with the 7-bit Slave address (in the seven most significant bits of TWAR) to which the TWI will respond when programmed as a Slave Transmitter or Receiver, and not needed in the Master modes. In multimaster systems, TWAR must be set in masters which can be addressed as Slaves by other Masters.

The LSB of TWAR is used to enable recognition of the general call address (0x00). There is an associated address comparator that looks for the slave address (or general call address if enabled) in the received serial address. If a match is found, an interrupt request is generated.

- **Bits 7:1 – TWA: TWI (Slave) Address Register**

These seven bits constitute the slave address of the TWI unit.

- **Bit 0 – TWGCE: TWI General Call Recognition Enable Bit**

If set, this bit enables the recognition of a General Call given over the 2-wire Serial Bus.

24.9.6 TWAMR – TWI (Slave) Address Mask Register

Bit	7	6	5	4	3	2	1	0	
(0xBD)	TWAM[6:0]							–	TWAMR
Read/Write	R/W	R/W	R/W	R/W	R/W	R/W	R/W	R	
Initial Value	0	0	0	0	0	0	0	0	

- **Bits 7:1 – TWAM: TWI Address Mask**

The TWAMR can be loaded with a 7-bit Slave Address mask. Each of the bits in TWAMR can mask (disable) the corresponding address bit in the TWI Address Register (TWAR). If the mask bit is set to one then the address match logic ignores the compare between the incoming address bit and the corresponding bit in TWAR. Figure 24-22 shows the address match logic in detail.

Figure 24-22. TWI Address Match Logic, Block Diagram

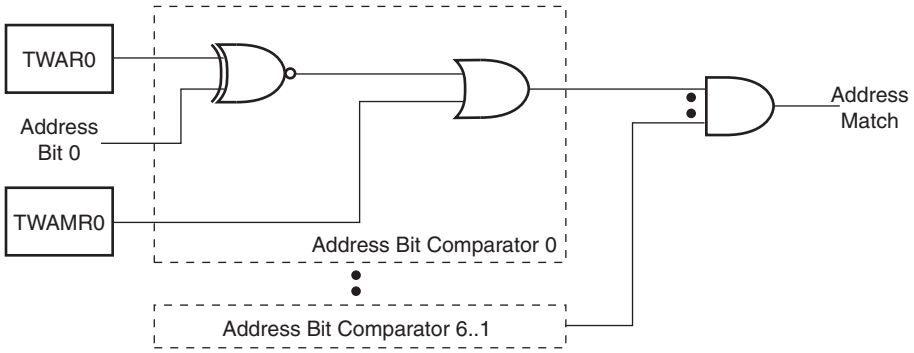

- **Bit 0 – Res: Reserved Bit**

This bit is reserved and will always read as zero.

25. AC – Analog Comparator

The Analog Comparator compares the input values on the positive pin AIN0 and negative pin AIN1. When the voltage on the positive pin AIN0 is higher than the voltage on the negative pin AIN1, the Analog Comparator output, ACO, is set. The comparator's output can be set to trigger the Timer/Counter1 Input Capture function. In addition, the comparator can trigger a separate interrupt, exclusive to the Analog Comparator. The user can select Interrupt triggering on comparator output rise, fall or toggle. A block diagram of the comparator and its surrounding logic is shown in Figure 25-1.

The Power Reduction ADC bit, PRADC, in "PRR0 – Power Reduction Register 0" on page 55 must be disabled by writing a logical zero to be able to use the ADC input MUX.

Figure 25-1. Analog Comparator Block Diagram(2)

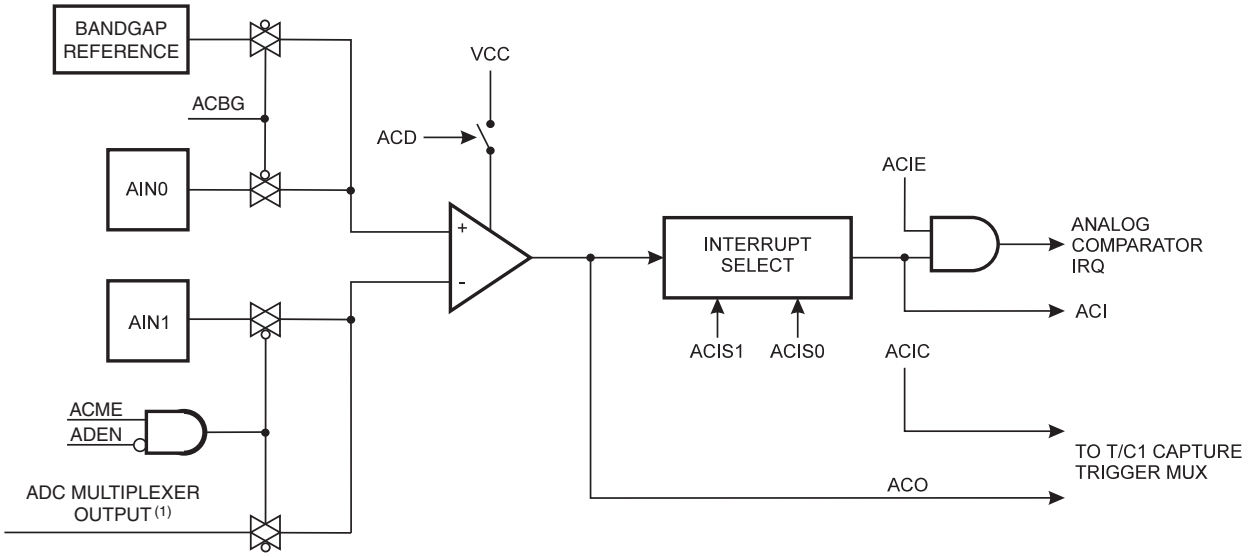

Note: 1. See Table 25-1.
2. Refer to Figure 1-1 on page 2 and Table 13-5 on page 76 for Analog Comparator pin placement.

25.1 Analog Comparator Multiplexed Input

It is possible to select any of the ADC15:0 pins to replace the negative input to the Analog Comparator. The ADC multiplexer is used to select this input, and consequently, the ADC must be switched off to utilize this feature. If the Analog Comparator Multiplexer Enable bit (ACME in ADCSRB) is set and the ADC is switched off (ADEN in ADCSRA is zero), MUX5 and MUX2:0 in ADMUX select the input pin to replace the negative input to the Analog Comparator, as shown in Table 25-1. If ACME is cleared or ADEN is set, AIN1 is applied to the negative input to the Analog Comparator.

Table 25-1. Analog Comparator Mulitiplexed Input

ACME	ADEN	MUX5	MUX2:0	Analog Comparator Negative Input
0	x	x	xxx	AIN1
1	1	x	xxx	AIN1
1	0	0	000	ADC0
1	0	0	001	ADC1
1	0	0	010	ADC2
1	0	0	011	ADC3

Table 25-1. Analog Comparator Mulitiplexed Input (Continued)

ACME	ADEN	MUX5	MUX2:0	Analog Comparator Negative Input
1	0	0	100	ADC4
1	0	0	101	ADC5
1	0	0	110	ADC6
1	0	0	111	ADC7
1	0	1	000	ADC8
1	0	1	001	ADC9
1	0	1	010	ADC10
1	0	1	011	ADC11
1	0	1	100	ADC12
1	0	1	101	ADC13
1	0	1	110	ADC14
1	0	1	111	ADC15

25.2 Register Description

25.2.1 ADCSRB – ADC Control and Status Register B

Bit	7	6	5	4	3	2	1	0	
(0x7B)	–	ACME	–	–	MUX5	ADTS2	ADTS1	ADTS0	ADCSRB
Read/Write	R	R/W	R	R	R/W	R/W	R/W	R/W	
Initial Value	0	0	0	0	0	0	0	0	

- **Bit 6 – ACME: Analog Comparator Multiplexer Enable**

When this bit is written logic one and the ADC is switched off (ADEN in ADCSRA is zero), the ADC multiplexer selects the negative input to the Analog Comparator. When this bit is written logic zero, AIN1 is applied to the negative input of the Analog Comparator. For a detailed description of this bit, see "Analog Comparator Multiplexed Input" on page 265.

25.2.2 ACSR – Analog Comparator Control and Status Register

Bit	7	6	5	4	3	2	1	0	
0x30 (0x50)	ACD	ACBG	ACO	ACI	ACIE	ACIC	ACIS1	ACIS0	ACSR
Read/Write	R/W	R/W	R	R/W	R/W	R/W	R/W	R/W	
Initial Value	0	0	N/A	0	0	0	0	0	

- **Bit 7 – ACD: Analog Comparator Disable**

When this bit is written logic one, the power to the Analog Comparator is switched off. This bit can be set at any time to turn off the Analog Comparator. This will reduce power consumption in Active and Idle mode. When changing the ACD bit, the Analog Comparator Interrupt must be disabled by clearing the ACIE bit in ACSR. Otherwise an interrupt can occur when the bit is changed.

- **Bit 6 – ACBG: Analog Comparator Bandgap Select**

When this bit is set, a fixed bandgap reference voltage replaces the positive input to the Analog Comparator. When this bit is cleared, AIN0 is applied to the positive input of the Analog Comparator. When the bandgap reference is used as input to the Analog Comparator, it will take a certain time for the voltage to stabilize. If not stabilized, the first conversion may give a wrong value. See "Internal Voltage Reference" on page 60.

- **Bit 5 – ACO: Analog Comparator Output**

The output of the Analog Comparator is synchronized and then directly connected to ACO. The synchronization introduces a delay of 1 - 2 clock cycles.

- **Bit 4 – ACI: Analog Comparator Interrupt Flag**

This bit is set by hardware when a comparator output event triggers the interrupt mode defined by ACIS1 and ACIS0. The Analog Comparator interrupt routine is executed if the ACIE bit is set and the I-bit in SREG is set. ACI is cleared by hardware when executing the corresponding interrupt handling vector. Alternatively, ACI is cleared by writing a logic one to the flag.

- **Bit 3 – ACIE: Analog Comparator Interrupt Enable**

When the ACIE bit is written logic one and the I-bit in the Status Register is set, the Analog Comparator interrupt is activated. When written logic zero, the interrupt is disabled.

- **Bit 2 – ACIC: Analog Comparator Input Capture Enable**

When written logic one, this bit enables the input capture function in Timer/Counter1 to be triggered by the Analog Comparator. The comparator output is in this case directly connected to the input capture front-end logic, making the comparator utilize the noise canceler and edge select features of the Timer/Counter1 Input Capture interrupt. When written logic zero, no connection between the Analog Comparator and the input capture function exists. To make the comparator trigger the Timer/Counter1 Input Capture interrupt, the ICIE1 bit in the Timer Interrupt Mask Register (TIMSK1) must be set.

- **Bits 1, 0 – ACIS1, ACIS0: Analog Comparator Interrupt Mode Select**

These bits determine which comparator events that trigger the Analog Comparator interrupt. The different settings are shown in Table 25-2.

Table 25-2. ACIS1/ACIS0 Settings

ACIS1	ACIS0	Interrupt Mode
0	0	Comparator Interrupt on Output Toggle
0	1	Reserved
1	0	Comparator Interrupt on Falling Output Edge
1	1	Comparator Interrupt on Rising Output Edge

When changing the ACIS1/ACIS0 bits, the Analog Comparator Interrupt must be disabled by clearing its Interrupt Enable bit in the ACSR Register. Otherwise an interrupt can occur when the bits are changed.

25.2.3 DIDR1 – Digital Input Disable Register 1

Bit	7	6	5	4	3	2	1	0	
(0x7F)	–	–	–	–	–	–	AIN1D	AIN0D	DIDR1
Read/Write	R	R	R	R	R	R	R/W	R/W	
Initial Value	0	0	0	0	0	0	0	0	

- **Bit 1, 0 – AIN1D, AIN0D: AIN1, AIN0 Digital Input Disable**

When this bit is written logic one, the digital input buffer on the AIN1/0 pin is disabled. The corresponding PIN Register bit will always read as zero when this bit is set. When an analog signal is applied to the AIN1/0 pin and the digital input from this pin is not needed, this bit should be written logic one to reduce power consumption in the digital input buffer.

26. ADC – Analog to Digital Converter

26.1 Features

- **10-bit Resolution**
- **1 LSB Integral Non-linearity**
- **±2 LSB Absolute Accuracy**
- **13µs - 260µs Conversion Time**
- **Up to 76.9kSPS (Up to 15kSPS at Maximum Resolution)**
- **16 Multiplexed Single Ended Input Channels**
- **14 Differential input channels**
- **4 Differential Input Channels with Optional Gain of 10× and 200×**
- **Optional Left Adjustment for ADC Result Readout**
- **0V - V_{CC} ADC Input Voltage Range**
- **2.7V - V_{CC} Differential ADC Voltage Range**
- **Selectable 2.56V or 1.1V ADC Reference Voltage**
- **Free Running or Single Conversion Mode**
- **Interrupt on ADC Conversion Complete**
- **Sleep Mode Noise Canceler**

The ATmega640/1280/1281/2560/2561 features a 10-bit successive approximation ADC. The ADC is connected to an 8/16-channel Analog Multiplexer which allows eight/sixteen single-ended voltage inputs constructed from the pins of Port F and Port K. The single-ended voltage inputs refer to 0V (GND).

The device also supports 16/32 differential voltage input combinations. Four of the differential inputs (ADC1 & ADC0, ADC3 & ADC2, ADC9 & ADC8 and ADC11 & ADC10) are equipped with a programmable gain stage, providing amplification steps of 0 dB (1×), 20 dB (10×) or 46 dB (200×) on the differential input voltage before the ADC conversion. The 16 channels are split in two sections of 8 channels where in each section seven differential analog input channels share a common negative terminal (ADC1/ADC9), while any other ADC input in that section can be selected as the positive input terminal. If 1× or 10× gain is used, 8 bit resolution can be expected. If 200× gain is used, 7 bit resolution can be expected.

The ADC contains a Sample and Hold circuit which ensures that the input voltage to the ADC is held at a constant level during conversion. A block diagram of the ADC is shown in Figure 26-1 on page 269.

The ADC has a separate analog supply voltage pin, AVCC. AV_{CC} must not differ more than ±0.3V from V_{CC}. See the paragraph “ADC Noise Canceler” on page 275 on how to connect this pin.

Internal reference voltages of nominally 1.1V, 2.56V or AVCC are provided On-chip. The voltage reference may be externally decoupled at the AREF pin by a capacitor for better noise performance.

The Power Reduction ADC bit, PRADC, in “PRR0 – Power Reduction Register 0” on page 55 must be disabled by writing a logical zero to enable the ADC.

Figure 26-1. Analog to Digital Converter Block Schematic

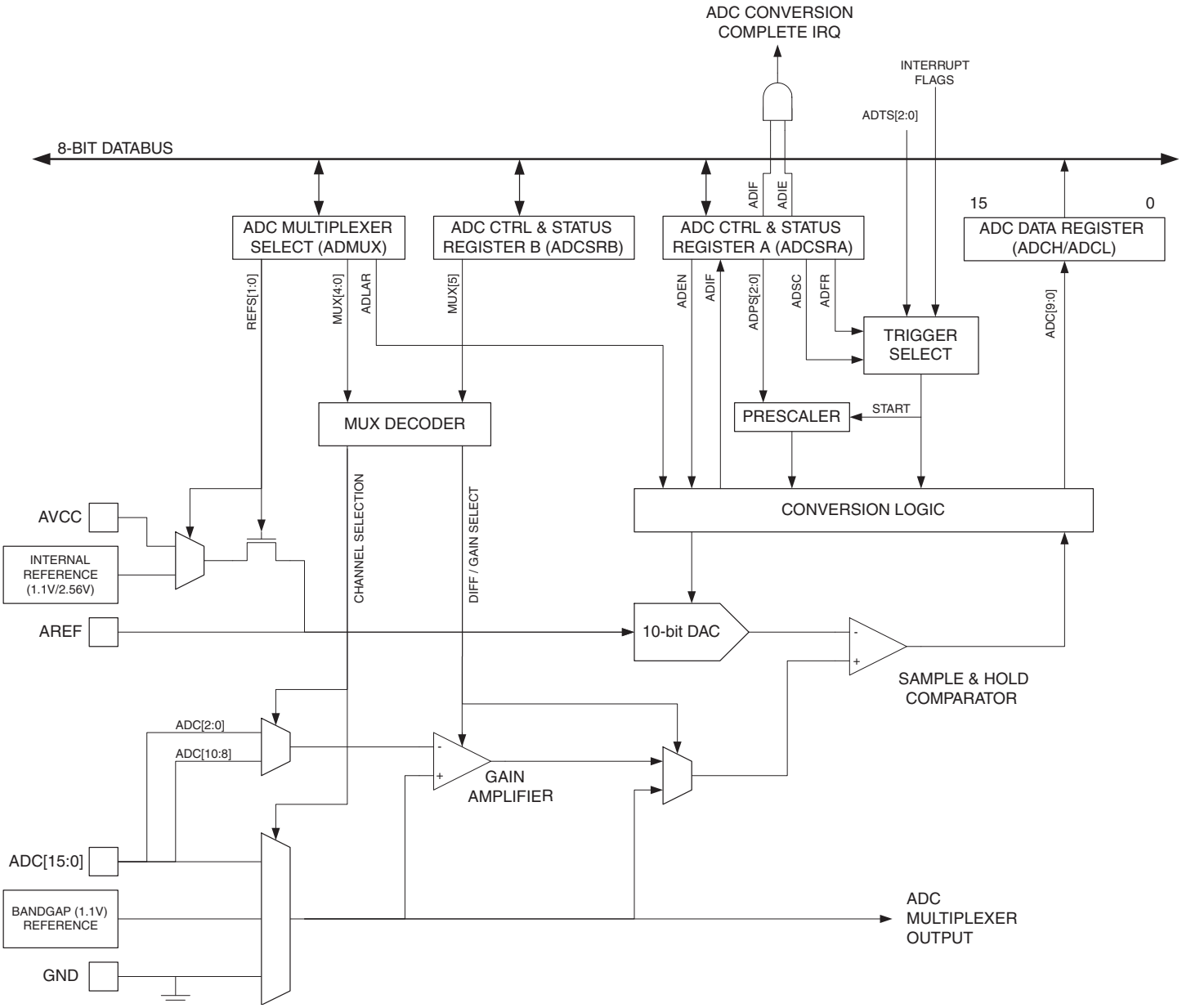

26.2 Operation

The ADC converts an analog input voltage to a 10-bit digital value through successive approximation. The minimum value represents GND and the maximum value represents the voltage on the AREF pin minus 1 LSB. Optionally, AVCC or an internal 1.1V or 2.56V reference voltage may be connected to the AREF pin by writing to the REFSn bits in the ADMUX Register. The internal voltage reference may thus be decoupled by an external capacitor at the AREF pin to improve noise immunity.

The analog input channel is selected by writing to the MUX bits in ADMUX and ADCSRB. Any of the ADC input pins, as well as GND and a fixed bandgap voltage reference, can be selected as single ended inputs to the ADC. A selection of ADC input pins can be selected as positive and negative inputs to the differential amplifier.

If differential channels are selected, the voltage difference between the selected input channel pair then becomes the analog input to the ADC. If single ended channels are used, the amplifier is bypassed altogether.

The ADC is enabled by setting the ADC Enable bit, ADEN in ADCSRA. Voltage reference and input channel selections will not go into effect until ADEN is set. The ADC does not consume power when ADEN is cleared, so it is recommended to switch off the ADC before entering power saving sleep modes.

The ADC generates a 10-bit result which is presented in the ADC Data Registers, ADCH and ADCL. By default, the result is presented right adjusted, but can optionally be presented left adjusted by setting the ADLAR bit in ADMUX.

If the result is left adjusted and no more than 8-bit precision is required, it is sufficient to read ADCH. Otherwise, ADCL must be read first, then ADCH, to ensure that the content of the Data Registers belongs to the same conversion. Once ADCL is read, ADC access to Data Registers is blocked. This means that if ADCL has been read, and a conversion completes before ADCH is read, neither register is updated and the result from the conversion is lost. When ADCH is read, ADC access to the ADCH and ADCL Registers is re-enabled.

The ADC has its own interrupt which can be triggered when a conversion completes. When ADC access to the Data Registers is prohibited between reading of ADCH and ADCL, the interrupt will trigger even if the result is lost.

26.3 Starting a Conversion

A single conversion is started by writing a logical one to the ADC Start Conversion bit, ADSC. This bit stays high as long as the conversion is in progress and will be cleared by hardware when the conversion is completed. If a different data channel is selected while a conversion is in progress, the ADC will finish the current conversion before performing the channel change.

Alternatively, a conversion can be triggered automatically by various sources. Auto Triggering is enabled by setting the ADC Auto Trigger Enable bit, ADATE in ADCSRA. The trigger source is selected by setting the ADC Trigger Select bits, ADTS in ADCSRB (see description of the ADTS bits for a list of the trigger sources). When a positive edge occurs on the selected trigger signal, the ADC prescaler is reset and a conversion is started. This provides a method of starting conversions at fixed intervals. If the trigger signal still is set when the conversion completes, a new conversion will not be started. If another positive edge occurs on the trigger signal during conversion, the edge will be ignored. Note that an Interrupt Flag will be set even if the specific interrupt is disabled or the Global Interrupt Enable bit in SREG is cleared. A conversion can thus be triggered without causing an interrupt. However, the Interrupt Flag must be cleared in order to trigger a new conversion at the next interrupt event.

Figure 26-2. ADC Auto Trigger Logic

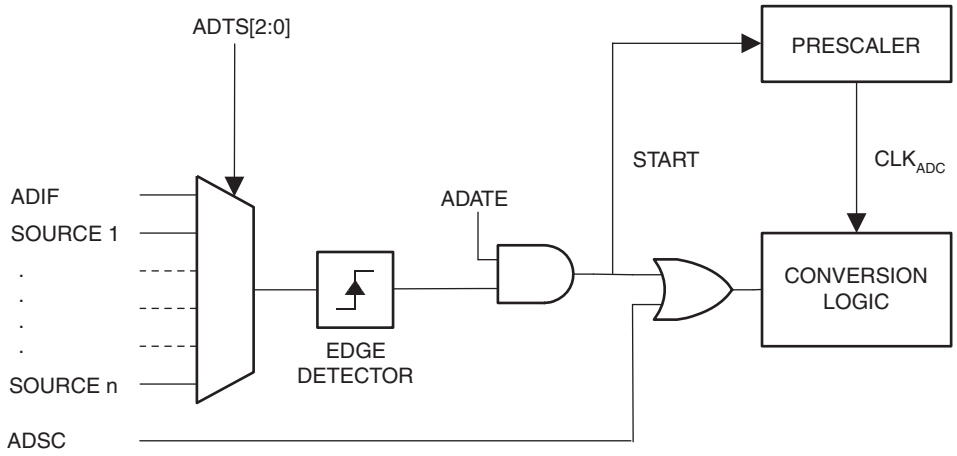

Using the ADC Interrupt Flag as a trigger source makes the ADC start a new conversion as soon as the ongoing conversion has finished. The ADC then operates in Free Running mode, constantly sampling and updating the ADC Data Register. The first conversion must be started by writing a logical one to the ADSC bit in ADCSRA. In

this mode the ADC will perform successive conversions independently of whether the ADC Interrupt Flag, ADIF is cleared or not.

If Auto Triggering is enabled, single conversions can be started by writing ADSC in ADCSRA to one. ADSC can also be used to determine if a conversion is in progress. The ADSC bit will be read as one during a conversion, independently of how the conversion was started.

26.4 Prescaling and Conversion Timing

Figure 26-3. ADC Prescaler

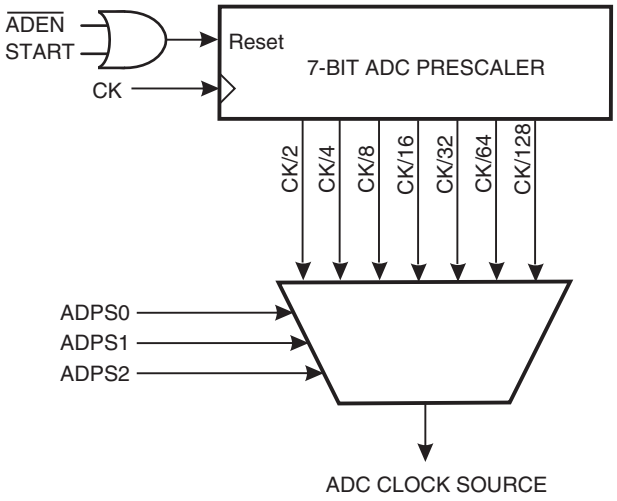

By default, the successive approximation circuitry requires an input clock frequency between 50kHz and 200kHz. If a lower resolution than 10 bits is needed, the input clock frequency to the ADC can be as high as 1000kHz to get a higher sample rate.

The ADC module contains a prescaler, which generates an acceptable ADC clock frequency from any CPU frequency above 100kHz. The prescaling is set by the ADPS bits in ADCSRA. The prescaler starts counting from the moment the ADC is switched on by setting the ADEN bit in ADCSRA. The prescaler keeps running for as long as the ADEN bit is set, and is continuously reset when ADEN is low.

When initiating a single ended conversion by setting the ADSC bit in ADCSRA, the conversion starts at the following rising edge of the ADC clock cycle.

A normal conversion takes 13 ADC clock cycles. The first conversion after the ADC is switched on (ADEN in ADCSRA is set) takes 25 ADC clock cycles in order to initialize the analog circuitry.

When the bandgap reference voltage is used as input to the ADC, it will take a certain time for the voltage to stabilize. If not stabilized, the first value read after the first conversion may be wrong.

The actual sample-and-hold takes place 1.5 ADC clock cycles after the start of a normal conversion and 13.5 ADC clock cycles after the start of an first conversion. When a conversion is complete, the result is written to the ADC Data Registers, and ADIF is set. In Single Conversion mode, ADSC is cleared simultaneously. The software may then set ADSC again, and a new conversion will be initiated on the first rising ADC clock edge.

When Auto Triggering is used, the prescaler is reset when the trigger event occurs. This assures a fixed delay from the trigger event to the start of conversion. In this mode, the sample-and-hold takes place two ADC clock cycles after the rising edge on the trigger source signal. Three additional CPU clock cycles are used for synchronization logic.

In Free Running mode, a new conversion will be started immediately after the conversion completes, while ADSC remains high. For a summary of conversion times, see Table 26-1 on page 273.

Figure 26-4. ADC Timing Diagram, First Conversion (Single Conversion Mode)

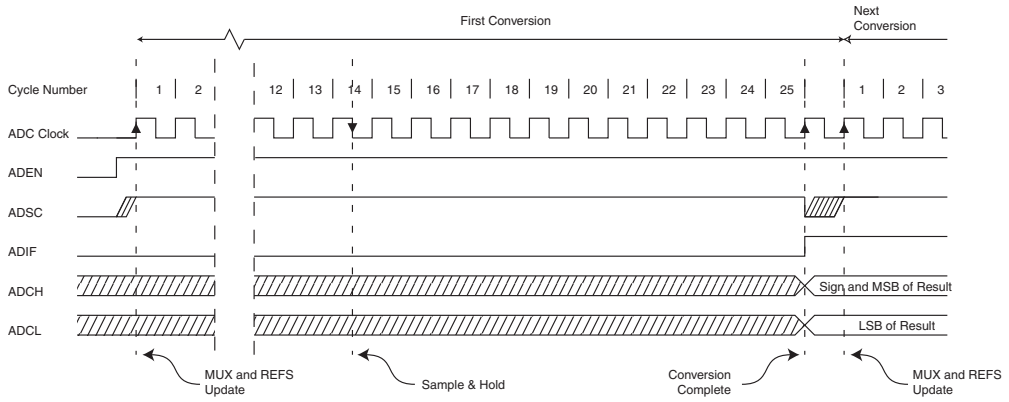

Figure 26-5. ADC Timing Diagram, Single Conversion

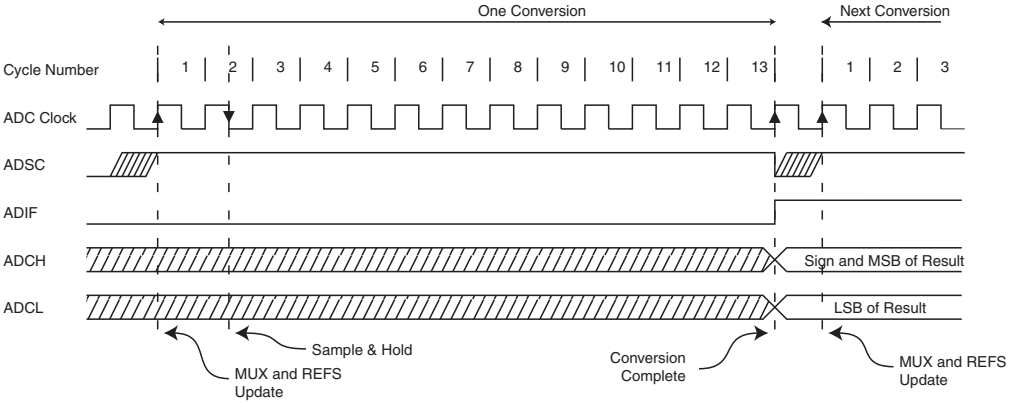

Figure 26-6. ADC Timing Diagram, Auto Triggered Conversion

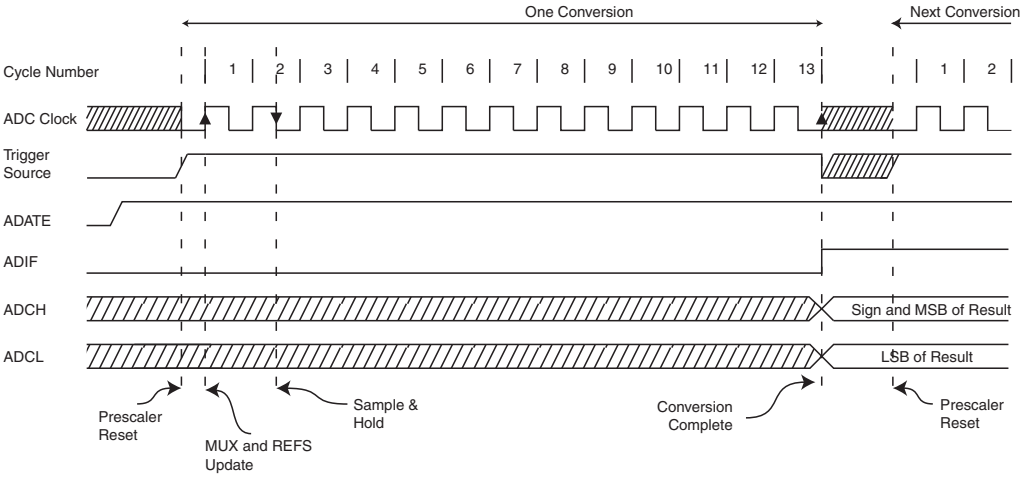

Figure 26-7. ADC Timing Diagram, Free Running Conversion

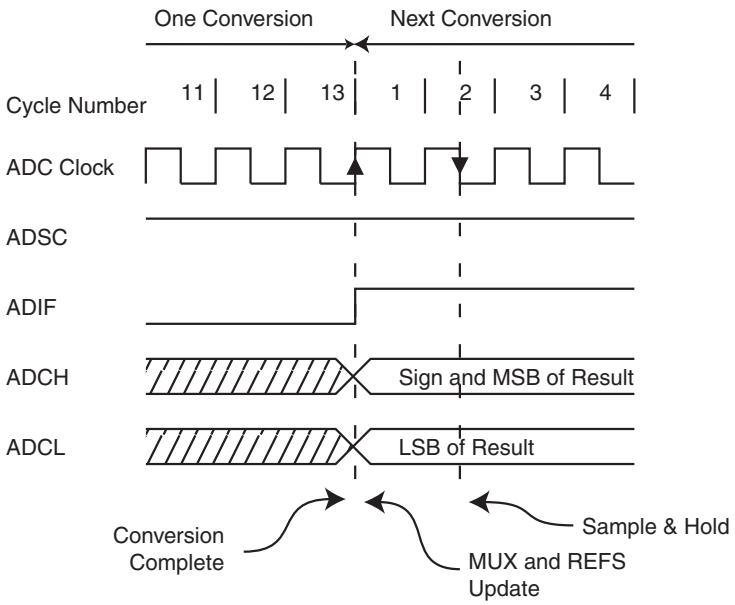

Table 26-1. ADC Conversion Time

Condition	Sample & Hold (Cycles from Start of Conversion)	Conversion Time (Cycles)
First conversion	13.5	25
Normal conversions, single ended	1.5	13
Auto Triggered conversions	2	13.5
Normal conversions, differential	1.5/2.5	13/14

26.4.1 Differential Channels

When using differential channels, certain aspects of the conversion need to be taken into consideration.

Differential conversions are synchronized to the internal clock CK_{ADC2} equal to half the ADC clock. This synchronization is done automatically by the ADC interface in such a way that the sample-and-hold occurs at a specific phase of CK_{ADC2}. A conversion initiated by the user (that is, all single conversions, and the first free running conversion) when CK_{ADC2} is low will take the same amount of time as a single ended conversion (13 ADC clock cycles from the next prescaled clock cycle). A conversion initiated by the user when CK_{ADC2} is high will take 14 ADC clock cycles due to the synchronization mechanism. In Free Running mode, a new conversion is initiated immediately after the previous conversion completes, and since CK_{ADC2} is high at this time, all automatically started (that is, all but the first) Free Running conversions will take 14 ADC clock cycles.

If differential channels are used and conversions are started by Auto Triggering, the ADC must be switched off between conversions. When Auto Triggering is used, the ADC prescaler is reset before the conversion is started. Since the stage is dependent of a stable ADC clock prior to the conversion, this conversion will not be valid. By disabling and then re-enabling the ADC between each conversion (writing ADEN in ADCSRA to “0” then to “1”), only extended conversions are performed. The result from the extended conversions will be valid. See “Prescaling and Conversion Timing” on page 271 for timing details.

26.5 Changing Channel or Reference Selection

The MUXn and REFS1:0 bits in the ADMUX Register are single buffered through a temporary register to which the CPU has random access. This ensures that the channels and reference selection only takes place at a safe point during the conversion. The channel and reference selection is continuously updated until a conversion is started. Once the conversion starts, the channel and reference selection is locked to ensure a sufficient sampling time for the ADC. Continuous updating resumes in the last ADC clock cycle before the conversion completes (ADIF in ADCSRA is set). Note that the conversion starts on the following rising ADC clock edge after ADSC is written. The user is thus advised not to write new channel or reference selection values to ADMUX until one ADC clock cycle after ADSC is written.

If Auto Triggering is used, the exact time of the triggering event can be indeterministic. Special care must be taken when updating the ADMUX Register, in order to control which conversion will be affected by the new settings.

If both ADATE and ADEN is written to one, an interrupt event can occur at any time. If the ADMUX Register is changed in this period, the user cannot tell if the next conversion is based on the old or the new settings. ADMUX can be safely updated in the following ways:

1. When ADATE or ADEN is cleared.
2. During conversion, minimum one ADC clock cycle after the trigger event.
3. After a conversion, before the Interrupt Flag used as trigger source is cleared.

When updating ADMUX in one of these conditions, the new settings will affect the next ADC conversion.

Special care should be taken when changing differential channels. Once a differential channel has been selected, the stage may take as much as 125µs to stabilize to the new value. Thus conversions should not be started within the first 125µs after selecting a new differential channel. Alternatively, conversion results obtained within this period should be discarded.

The same settling time should be observed for the first differential conversion after changing ADC reference (by changing the REFS1:0 bits in ADMUX).

26.5.1 ADC Input Channels

When changing channel selections, the user should observe the following guidelines to ensure that the correct channel is selected:

In Single Conversion mode, always select the channel before starting the conversion. The channel selection may be changed one ADC clock cycle after writing one to ADSC. However, the simplest method is to wait for the conversion to complete before changing the channel selection.

In Free Running mode, always select the channel before starting the first conversion. The channel selection may be changed one ADC clock cycle after writing one to ADSC. However, the simplest method is to wait for the first conversion to complete, and then change the channel selection. Since the next conversion has already started automatically, the next result will reflect the previous channel selection. Subsequent conversions will reflect the new channel selection.

When switching to a differential gain channel, the first conversion result may have a poor accuracy due to the required settling time for the automatic offset cancellation circuitry. The user should preferably disregard the first conversion result.

26.5.2 ADC Voltage Reference

The reference voltage for the ADC (V_{REF}) indicates the conversion range for the ADC. Single ended channels that exceed V_{REF} will result in codes close to 0x3FF. V_{REF} can be selected as either AVCC, internal 1.1V reference, internal 2.56V reference or external AREF pin.

AVCC is connected to the ADC through a passive switch. The internal 1.1V reference is generated from the internal bandgap reference (VBG) through an internal amplifier. In either case, the external AREF pin is directly connected to the ADC, and the reference voltage can be made more immune to noise by connecting a capacitor between the AREF pin and ground. V_{REF} can also be measured at the AREF pin with a high impedant voltmeter. Note that V_{REF} is a high impedant source, and only a capacitive load should be connected in a system. The Internal 2.56V reference is generated from the 1.1V reference.

If the user has a fixed voltage source connected to the AREF pin, the user may not use the other reference voltage options in the application, as they will be shorted to the external voltage. If no external voltage is applied to the AREF pin, the user may switch between AVCC, 1.1V and 2.56V as reference selection. The first ADC conversion result after switching reference voltage source may be inaccurate, and the user is advised to discard this result.

If differential channels are used, the selected reference should not be closer to AVCC than indicated in "ADC Characteristics – Preliminary Data" on page 365.

26.6 ADC Noise Canceler

The ADC features a noise canceler that enables conversion during sleep mode to reduce noise induced from the CPU core and other I/O peripherals. The noise canceler can be used with ADC Noise Reduction and Idle mode. To make use of this feature, the following procedure should be used:

1. Make sure that the ADC is enabled and is not busy converting. Single Conversion mode must be selected and the ADC conversion complete interrupt must be enabled.
2. Enter ADC Noise Reduction mode (or Idle mode). The ADC will start a conversion once the CPU has been halted.
3. If no other interrupts occur before the ADC conversion completes, the ADC interrupt will wake up the CPU and execute the ADC Conversion Complete interrupt routine. If another interrupt wakes up the CPU before the ADC conversion is complete, that interrupt will be executed, and an ADC Conversion Complete interrupt request will be generated when the ADC conversion completes. The CPU will remain in active mode until a new sleep command is executed.

Note that the ADC will not be automatically turned off when entering other sleep modes than Idle mode and ADC Noise Reduction mode. The user is advised to write zero to ADEN before entering such sleep modes to avoid excessive power consumption.

If the ADC is enabled in such sleep modes and the user wants to perform differential conversions, the user is advised to switch the ADC off and on after waking up from sleep to prompt an extended conversion to get a valid result.

26.6.1 Analog Input Circuitry

The analog input circuitry for single ended channels is illustrated in Figure 26-8 on page 276 An analog source applied to ADCn is subjected to the pin capacitance and input leakage of that pin, regardless of whether that channel is selected as input for the ADC. When the channel is selected, the source must drive the S/H capacitor through the series resistance (combined resistance in the input path).

The ADC is optimized for analog signals with an output impedance of approximately 10kΩ or less. If such a source is used, the sampling time will be negligible. If a source with higher impedance is used, the sampling time will depend on how long time the source needs to charge the S/H capacitor, which can vary widely. The user is recommended to only use low impedant sources with slowly varying signals, since this minimizes the required charge transfer to the S/H capacitor.

Signal components higher than the Nyquist frequency ($f_{ADC}/2$) should not be present for either kind of channels, to avoid distortion from unpredictable signal convolution. The user is advised to remove high frequency components with a low-pass filter before applying the signals as inputs to the ADC.

Figure 26-8. Analog Input Circuitry

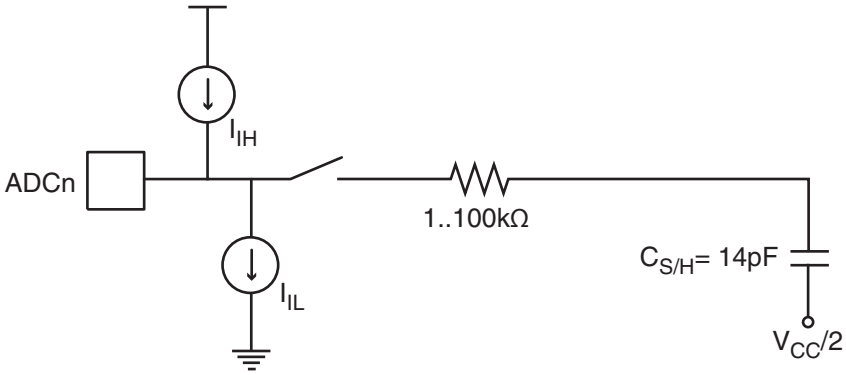

26.6.2 Analog Noise Canceling Techniques

Digital circuitry inside and outside the device generates EMI which might affect the accuracy of analog measurements. If conversion accuracy is critical, the noise level can be reduced by applying the following techniques:

1. Keep analog signal paths as short as possible. Make sure analog tracks run over the ground plane, and keep them well away from high-speed switching digital tracks.
2. The AVCC pin on the device should be connected to the digital V_{CC} supply voltage via an LC network as shown in Figure 26-9.
3. Use the ADC noise canceler function to reduce induced noise from the CPU.
4. If any ADC port pins are used as digital outputs, it is essential that these do not switch while a conversion is in progress.

Figure 26-9. ADC Power Connections, ATmega1281/2561.

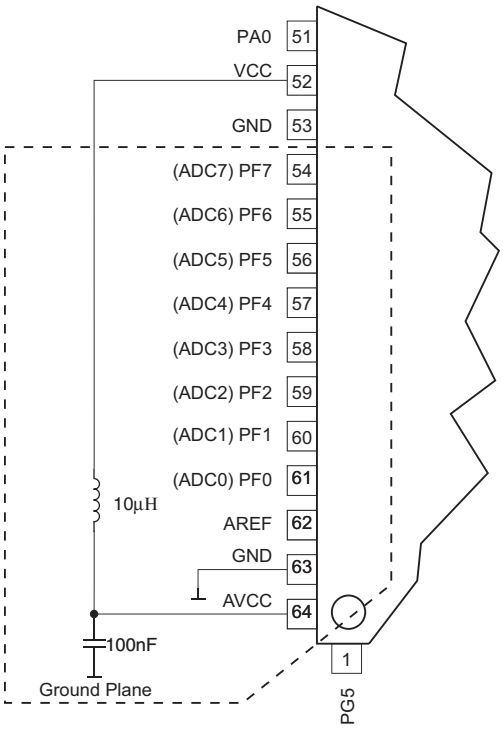

Figure 26-10. ADC Power Connections, ATmega640/1280/2560

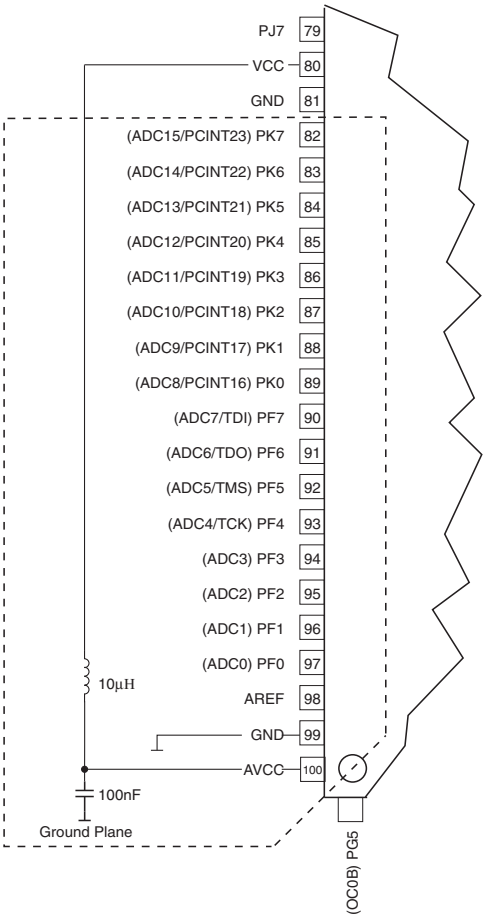

26.6.3 Offset Compensation Schemes

The stage has a built-in offset cancellation circuitry that nulls the offset of differential measurements as much as possible. The remaining offset in the analog path can be measured directly by selecting the same channel for both differential inputs. This offset residue can be then subtracted in software from the measurement results. Using this kind of software based offset correction, offset on any channel can be reduced below one LSB.

26.6.4 ADC Accuracy Definitions

An n-bit single-ended ADC converts a voltage linearly between GND and V_{REF} in 2^n steps (LSBs). The lowest code is read as 0, and the highest code is read as 2^n-1.

Several parameters describe the deviation from the ideal behavior:

- Offset: The deviation of the first transition (0x000 to 0x001) compared to the ideal transition (at 0.5 LSB). Ideal value: 0 LSB.

Figure 26-11. Offset Error

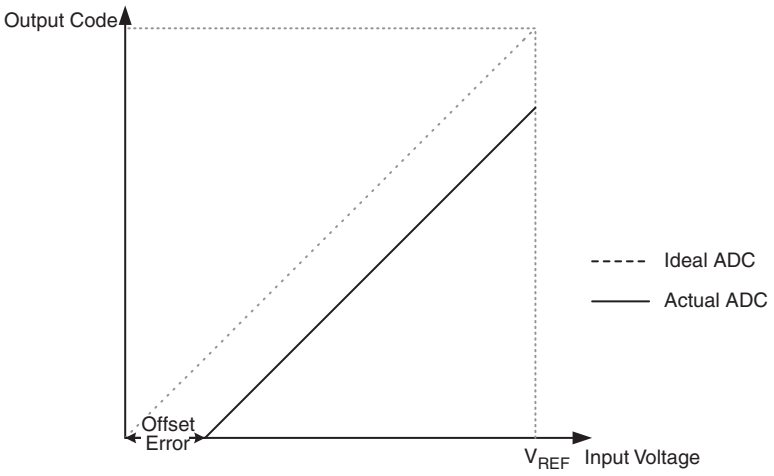

- Gain Error: After adjusting for offset, the Gain Error is found as the deviation of the last transition (0x3FE to 0x3FF) compared to the ideal transition (at 1.5 LSB below maximum). Ideal value: 0 LSB.

Figure 26-12. Gain Error

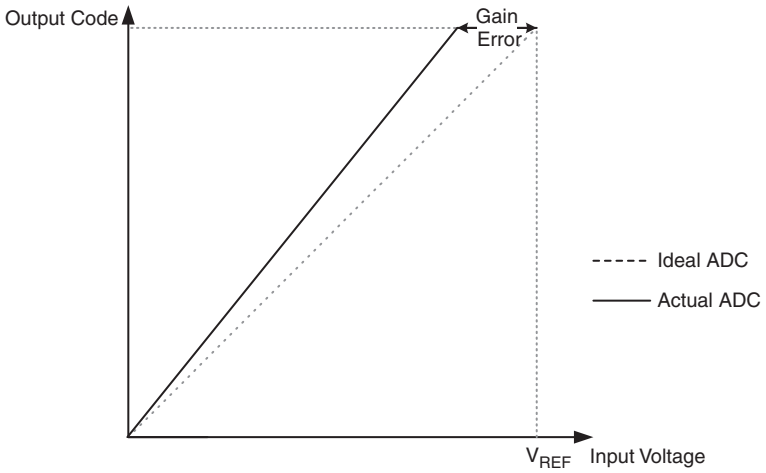

- Integral Non-linearity (INL): After adjusting for offset and gain error, the INL is the maximum deviation of an actual transition compared to an ideal transition for any code. Ideal value: 0 LSB.

Figure 26-13. Integral Non-linearity (INL)

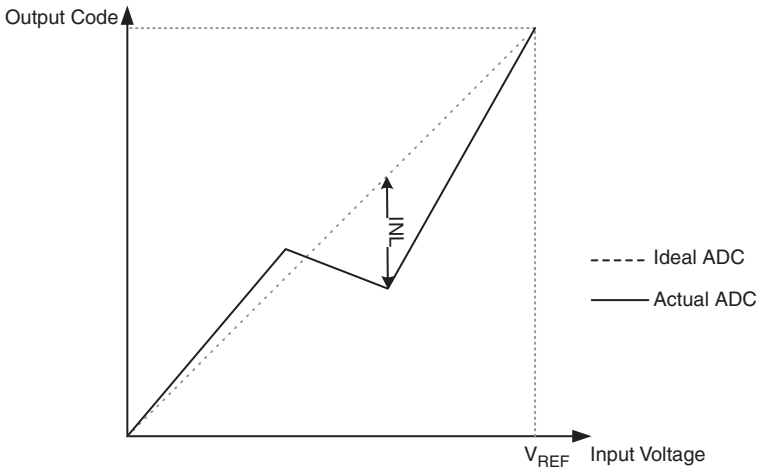

- Differential Non-linearity (DNL): The maximum deviation of the actual code width (the interval between two adjacent transitions) from the ideal code width (1 LSB). Ideal value: 0 LSB.

Figure 26-14. Differential Non-linearity (DNL)

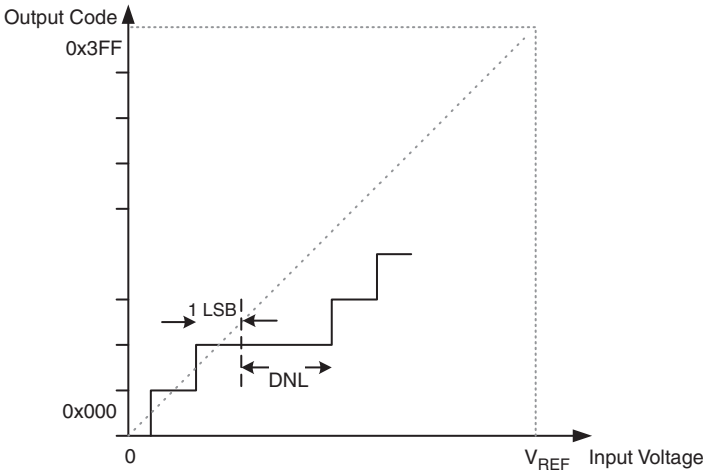

- Quantization Error: Due to the quantization of the input voltage into a finite number of codes, a range of input voltages (1 LSB wide) will code to the same value. Always ±0.5 LSB.
- Absolute Accuracy: The maximum deviation of an actual (unadjusted) transition compared to an ideal transition for any code. This is the compound effect of offset, gain error, differential error, non-linearity, and quantization error. Ideal value: ±0.5 LSB.

26.7 ADC Conversion Result

After the conversion is complete (ADIF is high), the conversion result can be found in the ADC Result Registers (ADCL, ADCH).

For single ended conversion, the result is

$$ADC = \frac{V_{IN} \cdot 1024}{V_{REF}}$$

where V_{IN} is the voltage on the selected input pin and V_{REF} the selected voltage reference (see Table 26-3 on page 281 and Table 26-4 on page 282). 0x000 represents analog ground, and 0x3FF represents the selected reference voltage minus one LSB.

If differential channels are used, the result is

$$ADC = \frac{(V_{POS} - V_{NEG}) \cdot 512}{V_{REF}}$$

where V_{POS} is the voltage on the positive input pin, V_{NEG} the voltage on the negative input pin, and V_{REF} the selected voltage reference. The result is presented in two's complement form, from 0x200 (-512d) through 0x1FF (+511d). Note that if the user wants to perform a quick polarity check of the result, it is sufficient to read the MSB of the result (ADC9 in ADCH). If the bit is one, the result is negative, and if this bit is zero, the result is positive. Figure 26-15 shows the decoding of the differential input range.

Table 26-2 on page 281 shows the resulting output codes if the differential input channel pair (ADCn - ADCm) is selected with a gain of GAIN and a reference voltage of V_{REF}.

Figure 26-15. Differential Measurement Range

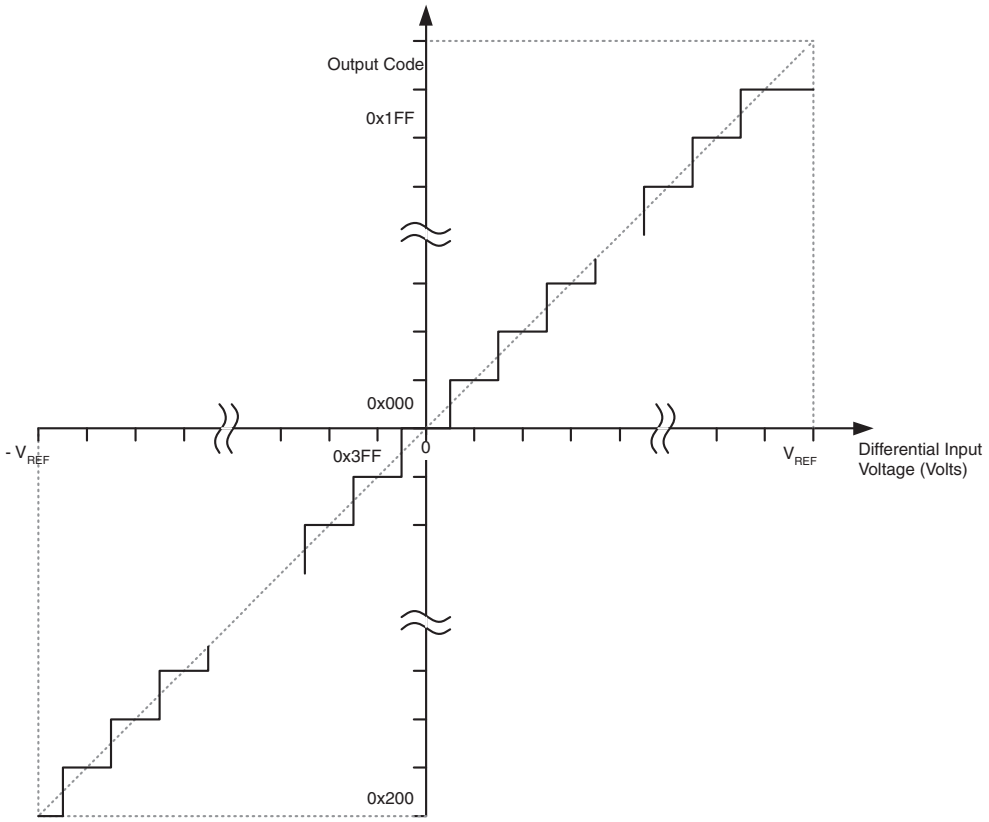

Table 26-2. Correlation Between Input Voltage and Output Codes

V_{ADCn}	Read Code	Corresponding Decimal Value
$V_{ADCm} + V_{REF} / GAIN$	0x1FF	511
$V_{ADCm} + 0.999\ V_{REF} / GAIN$	0x1FF	511
$V_{ADCm} + 0.998\ V_{REF} / GAIN$	0x1FE	510
...	...	...
$V_{ADCm} + 0.001\ V_{REF} / GAIN$	0x001	1
V_{ADCm}	0x000	0
$V_{ADCm} - 0.001\ V_{REF} / GAIN$	0x3FF	-1
...	...	...
$V_{ADCm} - 0.999\ V_{REF} / GAIN$	0x201	-511
$V_{ADCm} - V_{REF} / GAIN$	0x200	-512

Example:

ADMUX = 0xFB (ADC3 - ADC2, 10× gain, 2.56V reference, left adjusted result).

Voltage on ADC3 is 300mV, voltage on ADC2 is 500mV.

ADCR = 512 × 10 × (300 - 500) / 2560 = -400 = 0x270.

ADCL will thus read 0x00, and ADCH will read 0x9C. Writing zero to ADLAR right adjusts the result: ADCL = 0x70, ADCH = 0x02.

26.8 Register Description

26.8.1 ADMUX – ADC Multiplexer Selection Register

Bit	7	6	5	4	3	2	1	0	
(0x7C)	**REFS1**	**REFS0**	**ADLAR**	**MUX4**	**MUX3**	**MUX2**	**MUX1**	**MUX0**	**ADMUX**
Read/Write	R/W	R/W	R/W	R/W	R/W	R/W	R/W	R/W	
Initial Value	0	0	0	0	0	0	0	0	

- **Bit 7:6 – REFS1:0: Reference Selection Bits**

These bits select the voltage reference for the ADC, as shown in Table 26-3. If these bits are changed during a conversion, the change will not go in effect until this conversion is complete (ADIF in ADCSRA is set). The internal voltage reference options may not be used if an external reference voltage is being applied to the AREF pin.

Table 26-3. Voltage Reference Selections for ADC

REFS1	REFS0	Voltage Reference Selection[1]
0	0	AREF, Internal V_{REF} turned off
0	1	AVCC with external capacitor at AREF pin
1	0	Internal 1.1V Voltage Reference with external capacitor at AREF pin
1	1	Internal 2.56V Voltage Reference with external capacitor at AREF pin

Note: 1. If 10x or 200x gain is selected, only 2.56V should be used as Internal Voltage Reference. For differential conversion, only 1.1V cannot be used as internal voltage reference.

- **Bit 5 – ADLAR: ADC Left Adjust Result**

The ADLAR bit affects the presentation of the ADC conversion result in the ADC Data Register. Write one to ADLAR to left adjust the result. Otherwise, the result is right adjusted. Changing the ADLAR bit will affect the ADC Data Register immediately, regardless of any ongoing conversions. For a complete description of this bit, see "ADCL and ADCH – The ADC Data Register" on page 286.

- **Bits 4:0 – MUX4:0: Analog Channel and Gain Selection Bits**

The value of these bits selects which combination of analog inputs are connected to the ADC. See Table 26-4 for details. If these bits are changed during a conversion, the change will not go in effect until this conversion is complete (ADIF in ADCSRA is set).

26.8.2 ADCSRB – ADC Control and Status Register B

Bit	7	6	5	4	3	2	1	0	
(0x7B)	–	ACME	–	–	MUX5	ADTS2	ADTS1	ADTS0	ADCSRB
Read/Write	R	R/W	R	R	R/W	R/W	R/W	R/W	
Initial Value	0	0	0	0	0	0	0	0	

- **Bit 3 – MUX5: Analog Channel and Gain Selection Bit**

This bit is used together with MUX4:0 in ADMUX to select which combination in of analog inputs are connected to the ADC. See Table 26-4 for details. If this bit is changed during a conversion, the change will not go in effect until this conversion is complete.

This bit is not valid for ATmega1281/2561.

Table 26-4. Input Channel Selections

MUX5:0	Single Ended Input	Positive Differential Input	Negative Differential Input	Gain
000000	ADC0	N/A		
000001	ADC1			
000010	ADC2			
000011	ADC3			
000100	ADC4			
000101	ADC5			
000110	ADC6			
000111	ADC7			

Table 26-4. Input Channel Selections (Continued)

MUX5:0	Single Ended Input	Positive Differential Input	Negative Differential Input	Gain
001000[(1)]	N/A	ADC0	ADC0	10×
001001[(1)]		ADC1	ADC0	10×
001010[(1)]		ADC0	ADC0	200×
001011[(1)]		ADC1	ADC0	200×
001100[(1)]		ADC2	ADC2	10×
001101[(1)]		ADC3	ADC2	10×
001110[(1)]		ADC2	ADC2	200×
001111[(1)]		ADC3	ADC2	200×
010000		ADC0	ADC1	1×
010001		ADC1	ADC1	1×
010010		ADC2	ADC1	1×
010011		ADC3	ADC1	1×
010100		ADC4	ADC1	1×
010101		ADC5	ADC1	1×
010110		ADC6	ADC1	1×
010111		ADC7	ADC1	1×
011000		ADC0	ADC2	1×
011001		ADC1	ADC2	1×
011010	N/A	ADC2	ADC2	1×
011011		ADC3	ADC2	1×
011100		ADC4	ADC2	1×
011101		ADC5	ADC2	1×
011110	1.1V (V_{BG})	N/A		
011111	0V (GND)			
100000	ADC8	N/A		
100001	ADC9			
100010	ADC10			
100011	ADC11			
100100	ADC12			
100101	ADC13			
100110	ADC14			
100111	ADC15			

Table 26-4. Input Channel Selections (Continued)

MUX5:0	Single Ended Input	Positive Differential Input	Negative Differential Input	Gain
101000[(1)]	N/A	ADC8	ADC8	10×
101001[(1)]		ADC9	ADC8	10×
101010[(1)]		ADC8	ADC8	200×
101011[(1)]		ADC9	ADC8	200×
101100[(1)]		ADC10	ADC10	10×
101101[(1)]		ADC11	ADC10	10×
101110[(1)]		ADC10	ADC10	200×
101111[(1)]		ADC11	ADC10	200×
110000		ADC8	ADC9	1×
110001		ADC9	ADC9	1×
110010		ADC10	ADC9	1×
110011		ADC11	ADC9	1×
110100		ADC12	ADC9	1×
110101		ADC13	ADC9	1×
110110		ADC14	ADC9	1×
110111		ADC15	ADC9	1×
111000		ADC8	ADC10	1×
111001		ADC9	ADC10	1×
111010		ADC10	ADC10	1×
111011		ADC11	ADC10	1×
111100		ADC12	ADC10	1×
111101	N/A	ADC13	ADC10	1×
111110	Reserved	N/A		
111111	Reserved	N/A		

Note: 1. To reach the given accuracy, 10× or 200× Gain should not be used for operating voltage below 2.7V.

26.8.3 ADCSRA – ADC Control and Status Register A

Bit	7	6	5	4	3	2	1	0	
(0x7A)	**ADEN**	**ADSC**	**ADATE**	**ADIF**	**ADIE**	**ADPS2**	**ADPS1**	**ADPS0**	**ADCSRA**
Read/Write	R/W	R/W	R/W	R/W	R/W	R/W	R/W	R/W	
Initial Value	0	0	0	0	0	0	0	0	

- **Bit 7 – ADEN: ADC Enable**

Writing this bit to one enables the ADC. By writing it to zero, the ADC is turned off. Turning the ADC off while a conversion is in progress, will terminate this conversion.

- **Bit 6 – ADSC: ADC Start Conversion**

In Single Conversion mode, write this bit to one to start each conversion. In Free Running mode, write this bit to one to start the first conversion. The first conversion after ADSC has been written after the ADC has been enabled, or if ADSC is written at the same time as the ADC is enabled, will take 25 ADC clock cycles instead of the normal 13. This first conversion performs initialization of the ADC.

ADSC will read as one as long as a conversion is in progress. When the conversion is complete, it returns to zero. Writing zero to this bit has no effect.

- **Bit 5 – ADATE: ADC Auto Trigger Enable**

When this bit is written to one, Auto Triggering of the ADC is enabled. The ADC will start a conversion on a positive edge of the selected trigger signal. The trigger source is selected by setting the ADC Trigger Select bits, ADTS in ADCSRB.

- **Bit 4 – ADIF: ADC Interrupt Flag**

This bit is set when an ADC conversion completes and the Data Registers are updated. The ADC Conversion Complete Interrupt is executed if the ADIE bit and the I-bit in SREG are set. ADIF is cleared by hardware when executing the corresponding interrupt handling vector. Alternatively, ADIF is cleared by writing a logical one to the flag. Beware that if doing a Read-Modify-Write on ADCSRA, a pending interrupt can be disabled. This also applies if the SBI and CBI instructions are used.

- **Bit 3 – ADIE: ADC Interrupt Enable**

When this bit is written to one and the I-bit in SREG is set, the ADC Conversion Complete Interrupt is activated.

- **Bits 2:0 – ADPS2:0: ADC Prescaler Select Bits**

These bits determine the division factor between the XTAL frequency and the input clock to the ADC.

Table 26-5. ADC Prescaler Selections

ADPS2	ADPS1	ADPS0	Division Factor
0	0	0	2
0	0	1	2
0	1	0	4
0	1	1	8
1	0	0	16
1	0	1	32
1	1	0	64
1	1	1	128

26.8.4 ADCL and ADCH – The ADC Data Register

26.8.4.1 ADLAR = 0

Bit	15	14	13	12	11	10	9	8	
(0x79)	–	–	–	–	–	–	ADC9	ADC8	ADCH
(0x78)	ADC7	ADC6	ADC5	ADC4	ADC3	ADC2	ADC1	ADC0	ADCL
	7	6	5	4	3	2	1	0	
Read/Write	R	R	R	R	R	R	R	R	
	R	R	R	R	R	R	R	R	
Initial Value	0	0	0	0	0	0	0	0	
	0	0	0	0	0	0	0	0	

26.8.4.2 ADLAR = 1

Bit	15	14	13	12	11	10	9	8	
(0x79)	ADC9	ADC8	ADC7	ADC6	ADC5	ADC4	ADC3	ADC2	ADCH
(0x78)	ADC1	ADC0	–	–	–	–	–	–	ADCL
	7	6	5	4	3	2	1	0	
Read/Write	R	R	R	R	R	R	R	R	
	R	R	R	R	R	R	R	R	
Initial Value	0	0	0	0	0	0	0	0	
	0	0	0	0	0	0	0	0	

When an ADC conversion is complete, the result is found in these two registers. If differential channels are used, the result is presented in two's complement form.

When ADCL is read, the ADC Data Register is not updated until ADCH is read. Consequently, if the result is left adjusted and no more than 8-bit precision (7 bit + sign bit for differential input channels) is required, it is sufficient to read ADCH. Otherwise, ADCL must be read first, then ADCH.

The ADLAR bit in ADMUX, and the MUXn bits in ADMUX affect the way the result is read from the registers. If ADLAR is set, the result is left adjusted. If ADLAR is cleared (default), the result is right adjusted.

- **ADC9:0: ADC Conversion Result**

These bits represent the result from the conversion, as detailed in "ADC Conversion Result" on page 280.

26.8.5 ADCSRB – ADC Control and Status Register B

Bit	7	6	5	4	3	2	1	0	
(0x7B)	–	ACME	–	–	MUX5	ADTS2	ADTS1	ADTS0	ADCSRB
Read/Write	R	R/W	R	R	R/W	R/W	R/W	R/W	
Initial Value	0	0	0	0	0	0	0	0	

- **Bit 7 – Res: Reserved Bit**

This bit is reserved for future use. To ensure compatibility with future devices, this bit must be written to zero when ADCSRB is written.

- **Bit 2:0 – ADTS2:0: ADC Auto Trigger Source**

If ADATE in ADCSRA is written to one, the value of these bits selects which source will trigger an ADC conversion. If ADATE is cleared, the ADTS2:0 settings will have no effect. A conversion will be triggered by the rising edge of the selected Interrupt Flag. Note that switching from a trigger source that is cleared to a trigger source that is set, will generate a positive edge on the trigger signal. If ADEN in ADCSRA is set, this will start a conversion. Switching to Free Running mode (ADTS[2:0]=0) will not cause a trigger event, even if the ADC Interrupt Flag is set.

Table 26-6. ADC Auto Trigger Source Selections

ADTS2	ADTS1	ADTS0	Trigger Source
0	0	0	Free Running mode
0	0	1	Analog Comparator
0	1	0	External Interrupt Request 0
0	1	1	Timer/Counter0 Compare Match A
1	0	0	Timer/Counter0 Overflow
1	0	1	Timer/Counter1 Compare Match B
1	1	0	Timer/Counter1 Overflow
1	1	1	Timer/Counter1 Capture Event

Note: Free running mode cannot be used for differential channels (see chapter "Differential Channels" on page 273).

26.8.6 DIDR0 – Digital Input Disable Register 0

Bit	7	6	5	4	3	2	1	0	
(0x7E)	ADC7D	ADC6D	ADC5D	ADC4D	ADC3D	ADC2D	ADC1D	ADC0D	DIDR0
Read/Write	R/W	R/W	R/W	R/W	R/W	R/W	R/W	R/W	
Initial Value	0	0	0	0	0	0	0	0	

- **Bit 7:0 – ADC7D:ADC0D: ADC7:0 Digital Input Disable**

When this bit is written logic one, the digital input buffer on the corresponding ADC pin is disabled. The corresponding PIN Register bit will always read as zero when this bit is set. When an analog signal is applied to the ADC7:0 pin and the digital input from this pin is not needed, this bit should be written logic one to reduce power consumption in the digital input buffer.

26.8.7 DIDR2 – Digital Input Disable Register 2

Bit	7	6	5	4	3	2	1	0	
(0x7D)	**ADC15D**	**ADC14D**	**ADC13D**	**ADC12D**	**ADC11D**	**ADC10D**	**ADC9D**	**ADC8D**	**DIDR2**
Read/Write	R/W	R/W	R/W	R/W	R/W	R/W	R/W	R/W	
Initial Value	0	0	0	0	0	0	0	0	

- **Bit 7:0 – ADC15D:ADC8D: ADC15:8 Digital Input Disable**

When this bit is written logic one, the digital input buffer on the corresponding ADC pin is disabled. The corresponding PIN Register bit will always read as zero when this bit is set. When an analog signal is applied to the ADC15:8 pin and the digital input from this pin is not needed, this bit should be written logic one to reduce power consumption in the digital input buffer.

27. JTAG Interface and On-chip Debug System

27.1 Features

- **JTAG (IEEE std. 1149.1 Compliant) Interface**
- **Boundary-scan Capabilities According to the IEEE std. 1149.1 (JTAG) Standard**
- **Debugger Access to:**
  - **All Internal Peripheral Units**
  - **Internal and External RAM**
  - **The Internal Register File**
  - **Program Counter**
  - **EEPROM and Flash Memories**
- **Extensive On-chip Debug Support for Break Conditions, Including**
  - **AVR Break Instruction**
  - **Break on Change of Program Memory Flow**
  - **Single Step Break**
  - **Program Memory Break Points on Single Address or Address Range**
  - **Data Memory Break Points on Single Address or Address Range**
- **Programming of Flash, EEPROM, Fuses, and Lock Bits through the JTAG Interface**
- **On-chip Debugging Supported by AVR Studio®**

27.2 Overview

The AVR IEEE std. 1149.1 compliant JTAG interface can be used for

- Testing PCBs by using the JTAG Boundary-scan capability
- Programming the non-volatile memories, Fuses and Lock bits
- On-chip debugging

A brief description is given in the following sections. Detailed descriptions for Programming via the JTAG interface, and using the Boundary-scan Chain can be found in the sections "Programming via the JTAG Interface" on page 342 and "IEEE 1149.1 (JTAG) Boundary-scan" on page 295**,** respectively. The On-chip Debug support is considered being private JTAG instructions, and distributed within Atmel and to selected third party vendors only.

Figure 27-1 on page 290 shows a block diagram of the JTAG interface and the On-chip Debug system. The TAP Controller is a state machine controlled by the TCK and TMS signals. The TAP Controller selects either the JTAG Instruction Register or one of several Data Registers as the scan chain (Shift Register) between the TDI – input and TDO – output. The Instruction Register holds JTAG instructions controlling the behavior of a Data Register.

The ID-Register, Bypass Register, and the Boundary-scan Chain are the Data Registers used for board-level testing. The JTAG Programming Interface (actually consisting of several physical and virtual Data Registers) is used for serial programming via the JTAG interface. The Internal Scan Chain and Break Point Scan Chain are used for On-chip debugging only.

Figure 27-1. Block Diagram

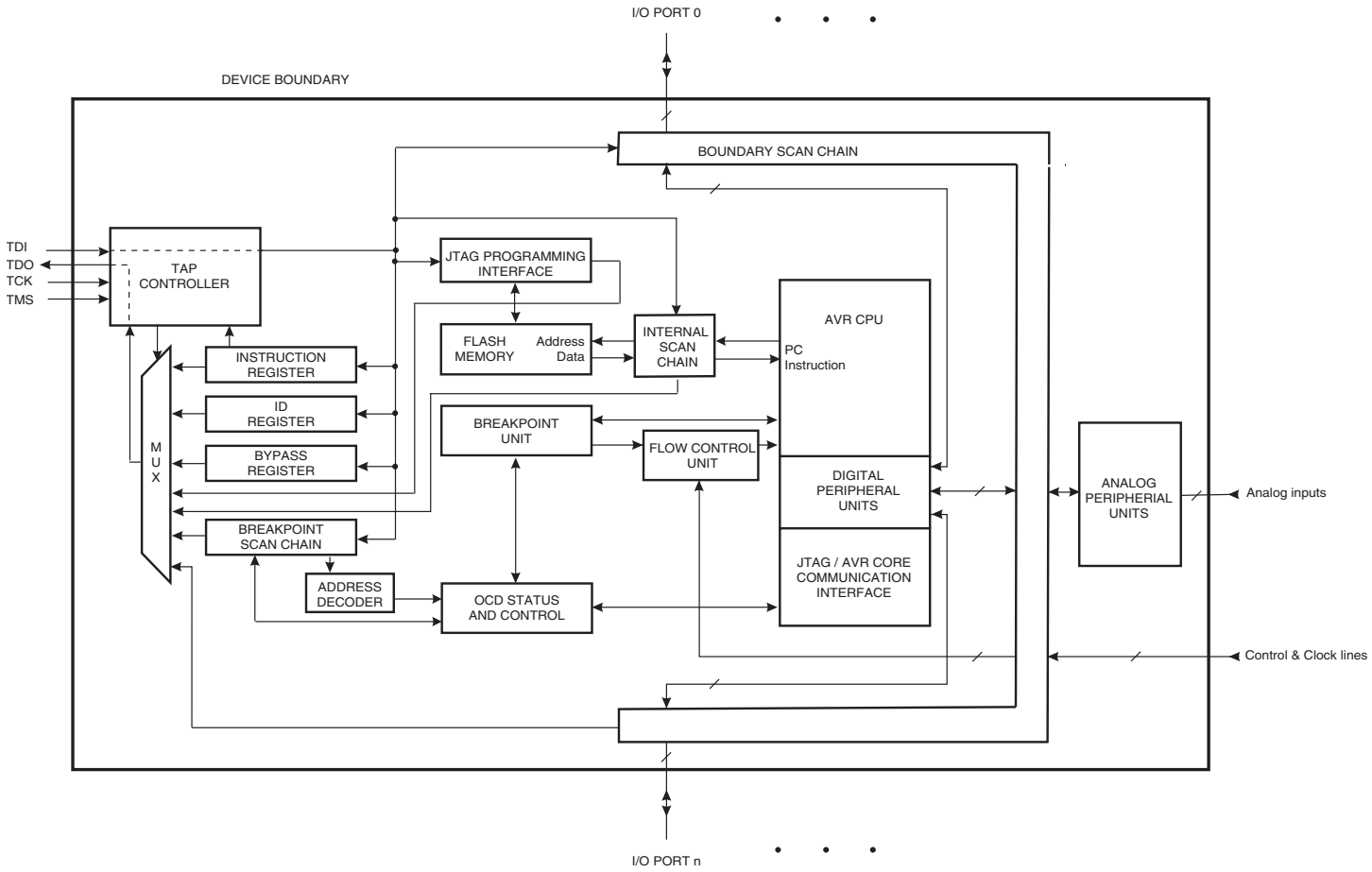

27.3 TAP - Test Access Port

The JTAG interface is accessed through four of the AVR's pins. In JTAG terminology, these pins constitute the Test Access Port – TAP. These pins are:

- **TMS**: Test mode select. This pin is used for navigating through the TAP-controller state machine
- **TCK**: Test Clock. JTAG operation is synchronous to TCK
- **TDI**: Test Data In. Serial input data to be shifted in to the Instruction Register or Data Register (Scan Chains)
- **TDO**: Test Data Out. Serial output data from Instruction Register or Data Register

The IEEE std. 1149.1 also specifies an optional TAP signal; TRST – Test ReSeT – which is not provided.

When the JTAGEN Fuse is unprogrammed, these four TAP pins are normal port pins, and the TAP controller is in reset. When programmed, the input TAP signals are internally pulled high and the JTAG is enabled for Boundary-scan and programming. The device is shipped with this fuse programmed.

For the On-chip Debug system, in addition to the JTAG interface pins, the $\overline{\text{RESET}}$ pin is monitored by the debugger to be able to detect external reset sources. The debugger can also pull the $\overline{\text{RESET}}$ pin low to reset the whole system, assuming only open collectors on the reset line are used in the application.

Figure 27-2. TAP Controller State Diagram

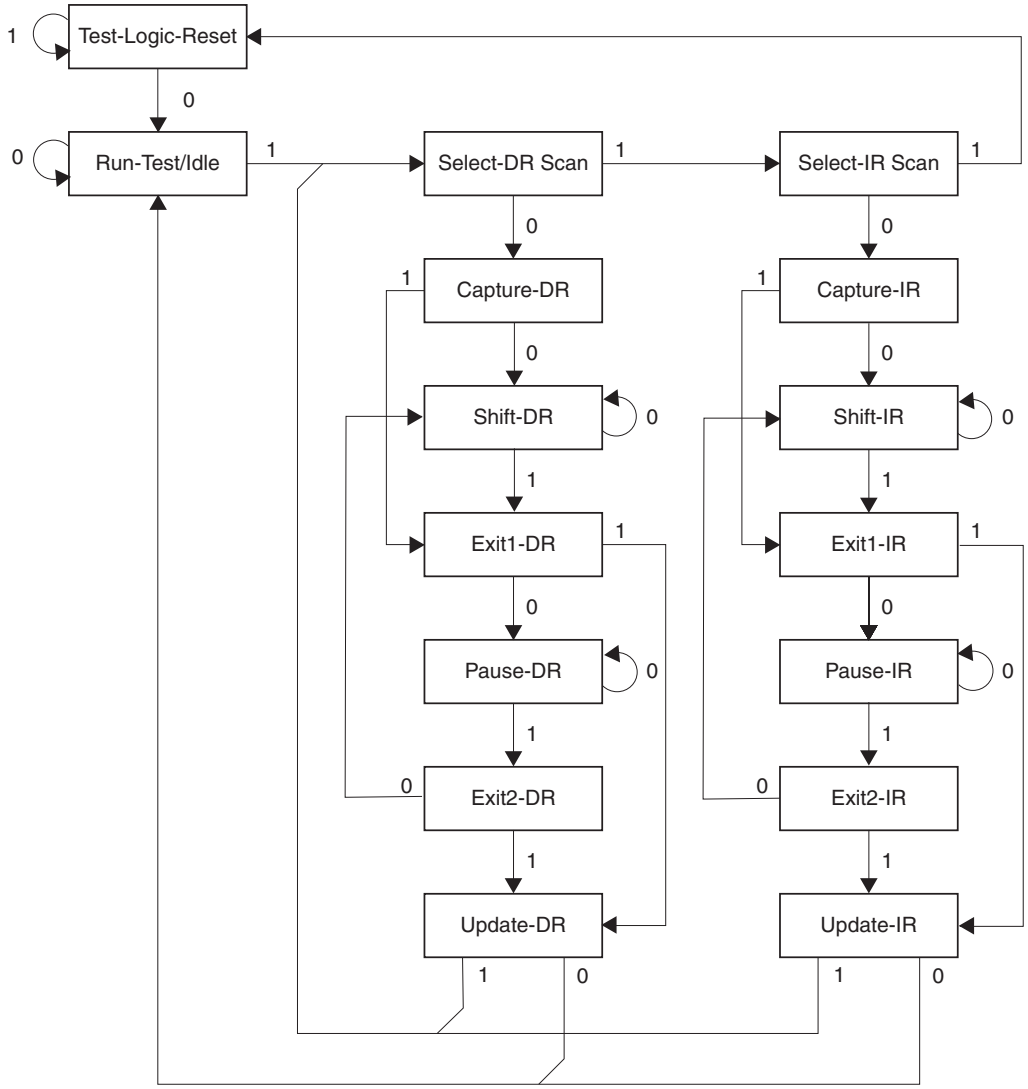

27.3.1 TAP Controller

The TAP controller is a 16-state finite state machine that controls the operation of the Boundary-scan circuitry, JTAG programming circuitry, or On-chip Debug system. The state transitions depicted in Figure 27-2 depend on the signal present on TMS (shown adjacent to each state transition) at the time of the rising edge at TCK. The initial state after a Power-on Reset is Test-Logic-Reset.

As a definition in this document, the LSB is shifted in and out first for all Shift Registers.

Assuming Run-Test/Idle is the present state, a typical scenario for using the JTAG interface is:

- At the TMS input, apply the sequence 1, 1, 0, 0 at the rising edges of TCK to enter the Shift Instruction Register – Shift-IR state. While in this state, shift the four bits of the JTAG instructions into the JTAG Instruction Register from the TDI input at the rising edge of TCK. The TMS input must be held low during input of the 3 LSBs in order to remain in the Shift-IR state. The MSB of the instruction is shifted in when this state is left by setting TMS high. While the instruction is shifted in from the TDI pin, the captured IR-state 0x01 is shifted out on the TDO pin. The JTAG Instruction selects a particular Data Register as path between TDI and TDO and controls the circuitry surrounding the selected Data Register.
- Apply the TMS sequence 1, 1, 0 to re-enter the Run-Test/Idle state. The instruction is latched onto the parallel output from the Shift Register path in the Update-IR state. The Exit-IR, Pause-IR, and Exit2-IR states are only used for navigating the state machine.

- At the TMS input, apply the sequence 1, 0, 0 at the rising edges of TCK to enter the Shift Data Register – Shift-DR state. While in this state, upload the selected Data Register (selected by the present JTAG instruction in the JTAG Instruction Register) from the TDI input at the rising edge of TCK. In order to remain in the Shift-DR state, the TMS input must be held low during input of all bits except the MSB. The MSB of the data is shifted in when this state is left by setting TMS high. While the Data Register is shifted in from the TDI pin, the parallel inputs to the Data Register captured in the Capture-DR state is shifted out on the TDO pin.
- Apply the TMS sequence 1, 1, 0 to re-enter the Run-Test/Idle state. If the selected Data Register has a latched parallel-output, the latching takes place in the Update-DR state. The Exit-DR, Pause-DR, and Exit2-DR states are only used for navigating the state machine.

As shown in the state diagram, the Run-Test/Idle state need not be entered between selecting JTAG instruction and using Data Registers, and some JTAG instructions may select certain functions to be performed in the Run-Test/Idle, making it unsuitable as an Idle state.

Note: Independent of the initial state of the TAP Controller, the Test-Logic-Reset state can always be entered by holding TMS high for five TCK clock periods.

For detailed information on the JTAG specification, refer to the literature listed in "Bibliography" on page 294.

27.4 Using the Boundary-scan Chain

A complete description of the Boundary-scan capabilities are given in the section "IEEE 1149.1 (JTAG) Boundary-scan" on page 295.

27.5 Using the On-chip Debug System

As shown in Figure 27-1 on page 290, the hardware support for On-chip Debugging consists mainly of:

- A scan chain on the interface between the internal AVR CPU and the internal peripheral units
- Break Point unit
- Communication interface between the CPU and JTAG system

All read or modify/write operations needed for implementing the Debugger are done by applying AVR instructions via the internal AVR CPU Scan Chain. The CPU sends the result to an I/O memory mapped location which is part of the communication interface between the CPU and the JTAG system.

The Break Point Unit implements Break on Change of Program Flow, Single Step Break, two Program Memory Break Points, and two combined Break Points. Together, the four Break Points can be configured as either:

- 4 single Program Memory Break Points
- 3 Single Program Memory Break Point + 1 single Data Memory Break Point
- 2 single Program Memory Break Points + 2 single Data Memory Break Points
- 2 single Program Memory Break Points + 1 Program Memory Break Point with mask ("range Break Point")
- 2 single Program Memory Break Points + 1 Data Memory Break Point with mask ("range Break Point")

A debugger, like the AVR Studio, may however use one or more of these resources for its internal purpose, leaving less flexibility to the end-user.

A list of the On-chip Debug specific JTAG instructions is given in "On-chip Debug Specific JTAG Instructions" on page 293.

The JTAGEN Fuse must be programmed to enable the JTAG Test Access Port. In addition, the OCDEN Fuse must be programmed and no Lock bits must be set for the On-chip debug system to work. As a security feature, the On-chip debug system is disabled when either of the LB1 or LB2 Lock bits are set. Otherwise, the On-chip debug system would have provided a back-door into a secured device.

The AVR Studio® enables the user to fully control execution of programs on an AVR device with On-chip Debug capability, AVR In-Circuit Emulator, or the built-in AVR Instruction Set Simulator. AVR Studio supports source level

execution of Assembly programs assembled with Atmel Corporation's AVR Assembler and C programs compiled with third party vendors' compilers.

AVR Studio runs under Microsoft® Windows® 95/98/2000 and Microsoft Windows NT.

For a full description of the AVR Studio, refer to the AVR Studio User Guide. Only highlights are presented in this document.

All necessary execution commands are available in AVR Studio, both on source level and on disassembly level. The user can execute the program, single step through the code either by tracing into or stepping over functions, step out of functions, place the cursor on a statement and execute until the statement is reached, stop the execution, and reset the execution target. In addition, the user can have an unlimited number of code Break Points (using the BREAK instruction) and up to two data memory Break Points, alternatively combined as a mask (range) Break Point.

27.6 On-chip Debug Specific JTAG Instructions

The On-chip debug support is considered being private JTAG instructions, and distributed within ATMEL and to selected third party vendors only. Instruction opcodes are listed for reference.

27.6.1 PRIVATE0; 0x8

Private JTAG instruction for accessing On-chip debug system.

27.6.2 PRIVATE1; 0x9

Private JTAG instruction for accessing On-chip debug system.

27.6.3 PRIVATE2; 0xA

Private JTAG instruction for accessing On-chip debug system.

27.6.4 PRIVATE3; 0xB

Private JTAG instruction for accessing On-chip debug system.

27.7 Using the JTAG Programming Capabilities

Programming of AVR parts via JTAG is performed via the 4-pin JTAG port, TCK, TMS, TDI, and TDO. These are the only pins that need to be controlled/observed to perform JTAG programming (in addition to power pins). It is not required to apply 12V externally. The JTAGEN Fuse must be programmed and the JTD bit in the MCUCR Register must be cleared to enable the JTAG Test Access Port.

The JTAG programming capability supports:

- Flash programming and verifying
- EEPROM programming and verifying
- Fuse programming and verifying
- Lock bit programming and verifying

The Lock bit security is exactly as in parallel programming mode. If the Lock bits LB1 or LB2 are programmed, the OCDEN Fuse cannot be programmed unless first doing a chip erase. This is a security feature that ensures no back-door exists for reading out the content of a secured device.

The details on programming through the JTAG interface and programming specific JTAG instructions are given in the section "Programming via the JTAG Interface" on page 342.

27.8 Bibliography

For more information about general Boundary-scan, the following literature can be consulted:

- IEEE: IEEE Std. 1149.1-1990. IEEE Standard Test Access Port and Boundary-scan Architecture, IEEE, 1993
- Colin Maunder: The Board Designers Guide to Testable Logic Circuits, Addison-Wesley, 1992

27.9 On-chip Debug Related Register in I/O Memory

27.9.1 OCDR – On-chip Debug Register

Bit	7	6	5	4	3	2	1	0	
0x31 (0x51)	**MSB/IDRD**							**LSB**	**OCDR**
Read/Write	R/W	R/W	R/W	R/W	R/W	R/W	R/W	R/W	
Initial Value	0	0	0	0	0	0	0	0	

The OCDR Register provides a communication channel from the running program in the microcontroller to the debugger. The CPU can transfer a byte to the debugger by writing to this location. At the same time, an internal flag; I/O Debug Register Dirty – IDRD – is set to indicate to the debugger that the register has been written. When the CPU reads the OCDR Register the 7 LSB will be from the OCDR Register, while the MSB is the IDRD bit. The debugger clears the IDRD bit when it has read the information.

In some AVR devices, this register is shared with a standard I/O location. In this case, the OCDR Register can only be accessed if the OCDEN Fuse is programmed, and the debugger enables access to the OCDR Register. In all other cases, the standard I/O location is accessed.

Refer to the debugger documentation for further information on how to use this register.

28. IEEE 1149.1 (JTAG) Boundary-scan

28.1 Features

- **JTAG (IEEE std. 1149.1 compliant) Interface**
- **Boundary-scan Capabilities According to the JTAG Standard**
- **Full Scan of all Port Functions as well as Analog Circuitry having Off-chip Connections**
- **Supports the Optional IDCODE Instruction**
- **Additional Public AVR_RESET Instruction to Reset the AVR**

28.2 System Overview

The Boundary-scan chain has the capability of driving and observing the logic levels on the digital I/O pins, as well as the boundary between digital and analog logic for analog circuitry having off-chip connections. At system level, all ICs having JTAG capabilities are connected serially by the TDI/TDO signals to form a long Shift Register. An external controller sets up the devices to drive values at their output pins, and observe the input values received from other devices. The controller compares the received data with the expected result. In this way, Boundary-scan provides a mechanism for testing interconnections and integrity of components on Printed Circuits Boards by using the four TAP signals only.

The four IEEE 1149.1 defined mandatory JTAG instructions IDCODE, BYPASS, SAMPLE/PRELOAD, and EXTEST, as well as the AVR specific public JTAG instruction AVR_RESET can be used for testing the Printed Circuit Board. Initial scanning of the Data Register path will show the ID-Code of the device, since IDCODE is the default JTAG instruction. It may be desirable to have the AVR device in reset during test mode. If not reset, inputs to the device may be determined by the scan operations, and the internal software may be in an undetermined state when exiting the test mode. Entering reset, the outputs of any port pin will instantly enter the high impedance state, making the HIGHZ instruction redundant. If needed, the BYPASS instruction can be issued to make the shortest possible scan chain through the device. The device can be set in the reset state either by pulling the external $\overline{\text{RESET}}$ pin low, or issuing the AVR_RESET instruction with appropriate setting of the Reset Data Register.

The EXTEST instruction is used for sampling external pins and loading output pins with data. The data from the output latch will be driven out on the pins as soon as the EXTEST instruction is loaded into the JTAG IR-Register. Therefore, the SAMPLE/PRELOAD should also be used for setting initial values to the scan ring, to avoid damaging the board when issuing the EXTEST instruction for the first time. SAMPLE/PRELOAD can also be used for taking a snapshot of the external pins during normal operation of the part.

The JTAGEN Fuse must be programmed and the JTD bit in the I/O Register MCUCR must be cleared to enable the JTAG Test Access Port.

When using the JTAG interface for Boundary-scan, using a JTAG TCK clock frequency higher than the internal chip frequency is possible. The chip clock is not required to run.

28.3 Data Registers

The Data Registers relevant for Boundary-scan operations are:

- Bypass Register
- Device Identification Register
- Reset Register
- Boundary-scan Chain

28.3.1 Bypass Register

The Bypass Register consists of a single Shift Register stage. When the Bypass Register is selected as path between TDI and TDO, the register is reset to 0 when leaving the Capture-DR controller state. The Bypass Register can be used to shorten the scan chain on a system when the other devices are to be tested.

28.3.2 Device Identification Register

Figure 28-1 shows the structure of the Device Identification Register.

Figure 28-1. The Format of the Device Identification Register

	MSB			LSB
Bit	31 – 28	27 – 12	11 – 1	0
Device ID	**Version**	**Part Number**	**Manufacturer ID**	**1**
	4 bits	16 bits	11 bits	1-bit

28.3.2.1 Version

Version is a 4-bit number identifying the revision of the component. The JTAG version number follows the revision of the device. Revision A is 0x0, revision B is 0x1 and so on.

28.3.2.2 Part Number

The part number is a 16-bit code identifying the component. The JTAG Part Number for ATmega640/1280/1281/2560/2561 is listed in Table 30-6 on page 328.

28.3.2.3 Manufacturer ID

The Manufacturer ID is a 11-bit code identifying the manufacturer. The JTAG manufacturer ID for ATMEL is listed in Table 30-6 on page 328.

28.3.3 Reset Register

The Reset Register is a test Data Register used to reset the part. Since the AVR tri-states Port Pins when reset, the Reset Register can also replace the function of the un-implemented optional JTAG instruction HIGHZ.

A high value in the Reset Register corresponds to pulling the external Reset low. The part is reset as long as there is a high value present in the Reset Register. Depending on the fuse settings for the clock options, the part will remain reset for a reset time-out period (see “Clock Sources” on page 40) after releasing the Reset Register. The output from this Data Register is not latched, so the reset will take place immediately, as shown in Figure 28-2 on page 297.

Figure 28-2. Reset Register

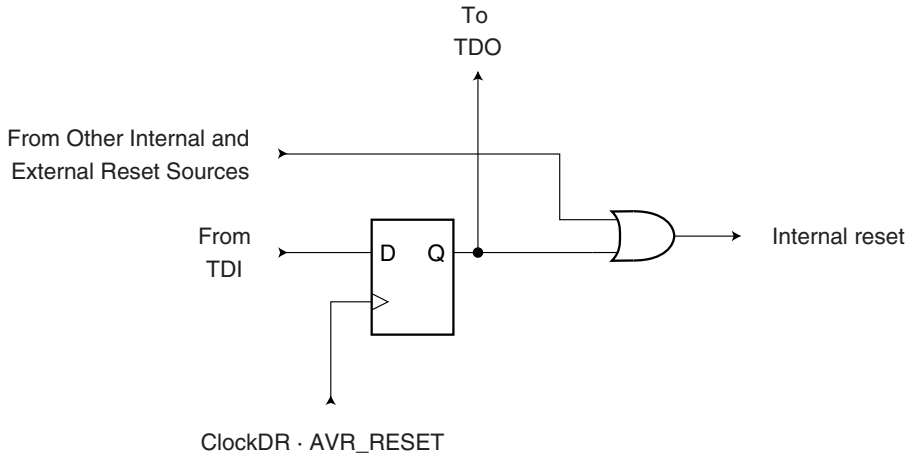

28.3.4 Boundary-scan Chain

The Boundary-scan Chain has the capability of driving and observing the logic levels on the digital I/O pins, as well as the boundary between digital and analog logic for analog circuitry having off-chip connections.

See "Boundary-scan Chain" on page 298 for a complete description.

28.4 Boundary-scan Specific JTAG Instructions

The Instruction Register is 4-bit wide, supporting up to 16 instructions. Listed below are the JTAG instructions useful for Boundary-scan operation. Note that the optional HIGHZ instruction is not implemented, but all outputs with tri-state capability can be set in high-impedant state by using the AVR_RESET instruction, since the initial state for all port pins is tri-state.

As a definition in this datasheet, the LSB is shifted in and out first for all Shift Registers.

The OPCODE for each instruction is shown behind the instruction name in hex format. The text describes which Data Register is selected as path between TDI and TDO for each instruction.

28.4.1 EXTEST; 0x0

Mandatory JTAG instruction for selecting the Boundary-scan Chain as Data Register for testing circuitry external to the AVR package. For port-pins, Pull-up Disable, Output Control, Output Data, and Input Data are all accessible in the scan chain. For Analog circuits having off-chip connections, the interface between the analog and the digital logic is in the scan chain. The contents of the latched outputs of the Boundary-scan chain is driven out as soon as the JTAG IR-Register is loaded with the EXTEST instruction.

The active states are:

- **Capture-DR**: Data on the external pins are sampled into the Boundary-scan Chain
- **Shift-DR**: The Internal Scan Chain is shifted by the TCK input
- **Update-DR**: Data from the scan chain is applied to output pins

28.4.2 IDCODE; 0x1

Optional JTAG instruction selecting the 32-bit ID-Register as Data Register. The ID-Register consists of a version number, a device number and the manufacturer code chosen by JEDEC. This is the default instruction after power-up.

The active states are:

- **Capture-DR**: Data in the IDCODE Register is sampled into the Boundary-scan Chain
- **Shift-DR**: The IDCODE scan chain is shifted by the TCK input

28.4.3 SAMPLE_PRELOAD; 0x2

Mandatory JTAG instruction for pre-loading the output latches and taking a snap-shot of the input/output pins without affecting the system operation. However, the output latches are not connected to the pins. The Boundary-scan Chain is selected as Data Register.

The active states are:

- **Capture-DR**: Data on the external pins are sampled into the Boundary-scan Chain
- **Shift-DR**: The Boundary-scan Chain is shifted by the TCK input
- **Update-DR**: Data from the Boundary-scan chain is applied to the output latches. However, the output latches are not connected to the pins

28.4.4 AVR_RESET; 0xC

The AVR specific public JTAG instruction for forcing the AVR device into the Reset mode or releasing the JTAG reset source. The TAP controller is not reset by this instruction. The one bit Reset Register is selected as Data Register. Note that the reset will be active as long as there is a logic “one” in the Reset Chain. The output from this chain is not latched.

The active states are:

- **Shift-DR**: The Reset Register is shifted by the TCK input

28.4.5 BYPASS; 0xF

Mandatory JTAG instruction selecting the Bypass Register for Data Register.

The active states are:

- **Capture-DR**: Loads a logic “0” into the Bypass Register
- **Shift-DR**: The Bypass Register cell between TDI and TDO is shifted

28.5 Boundary-scan Chain

The Boundary-scan chain has the capability of driving and observing the logic levels on the digital I/O pins, as well as the boundary between digital and analog logic for analog circuitry having off-chip connection.

28.5.1 Scanning the Digital Port Pins

Figure 28-3 on page 299 shows the Boundary-scan Cell for a bi-directional port pin. The pull-up function is disabled during Boundary-scan when the JTAG IC contains EXTEST or SAMPLE_PRELOAD. The cell consists of a bi-directional pin cell that combines the three signals Output Control - OCxn, Output Data - ODxn, and Input Data - IDxn, into only a two-stage Shift Register. The port and pin indexes are not used in the following description.

The Boundary-scan logic is not included in the figures in the datasheet. Figure 28-4 on page 300 shows a simple digital port pin as described in the section “I/O-Ports” on page 67. The Boundary-scan details from Figure 28-3 on page 299 replaces the dashed box in Figure 28-4 on page 300.

When no alternate port function is present, the Input Data - ID - corresponds to the PINxn Register value (but ID has no synchronizer), Output Data corresponds to the PORT Register, Output Control corresponds to the Data Direction - DD Register, and the Pull-up Enable - PUExn - corresponds to logic expression $\overline{PUD} \cdot \overline{DDxn} \cdot PORTxn$.

Digital alternate port functions are connected outside the dotted box in Figure 28-4 on page 300 to make the scan chain read the actual pin value. For analog function, there is a direct connection from the external pin to the analog circuit. There is no scan chain on the interface between the digital and the analog circuitry, but some digital control signal to analog circuitry are turned off to avoid driving contention on the pads.

When JTAG IR contains EXTEST or SAMPLE_PRELOAD the clock is not sent out on the port pins even if the CKOUT fuse is programmed. Even though the clock is output when the JTAG IR contains SAMPLE_PRELOAD, the clock is not sampled by the boundary scan.

Figure 28-3. Boundary-scan Cell for Bi-directional Port Pin with Pull-up Function.

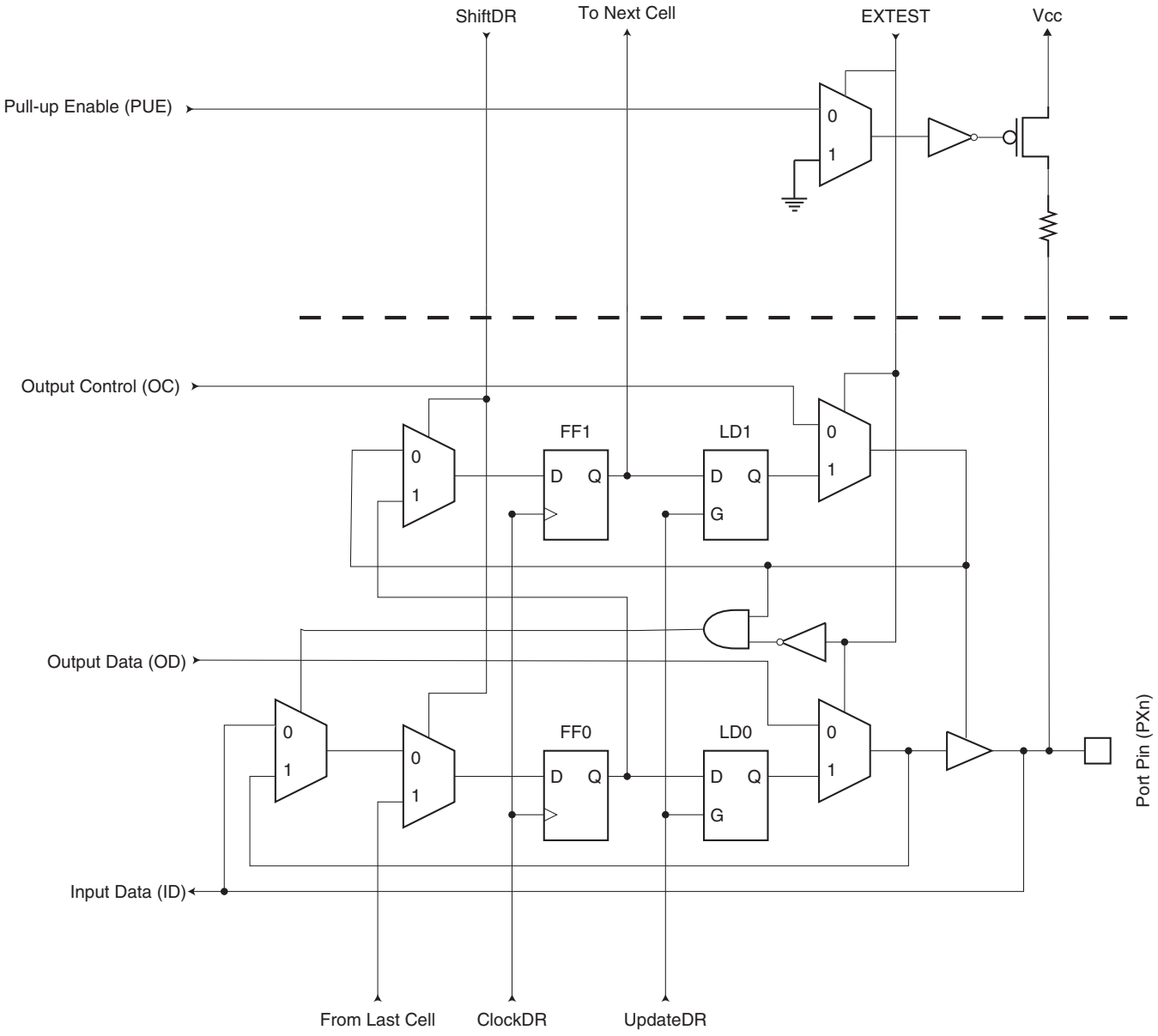

Figure 28-4. General Port Pin Schematic Diagram

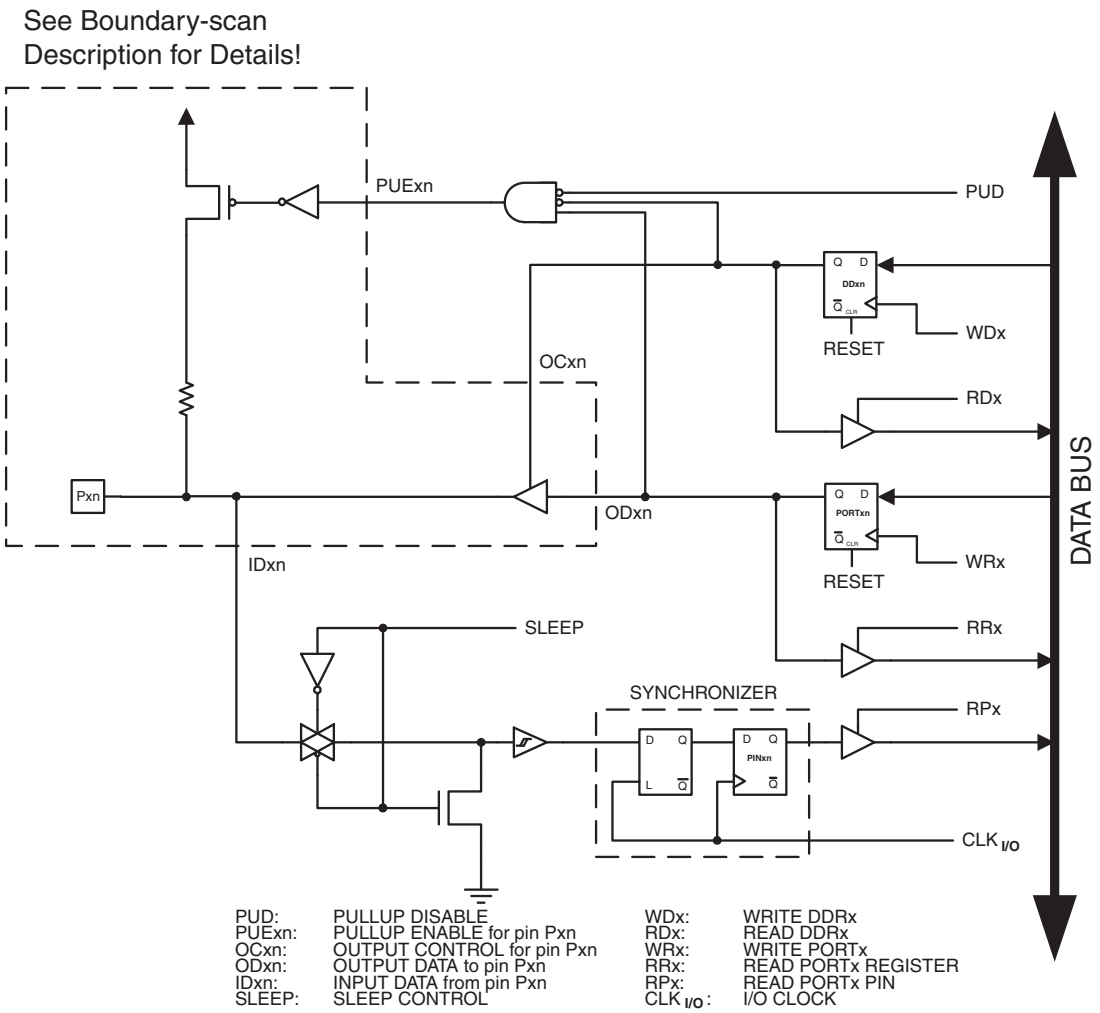

28.5.2 Scanning the RESET Pin

The RESET pin accepts 5V active low logic for standard reset operation, and 12V active high logic for High Voltage Parallel programming. An observe-only cell as shown in Figure 28-5 is inserted for the 5V reset signal.

Figure 28-5. Observe-only Cell

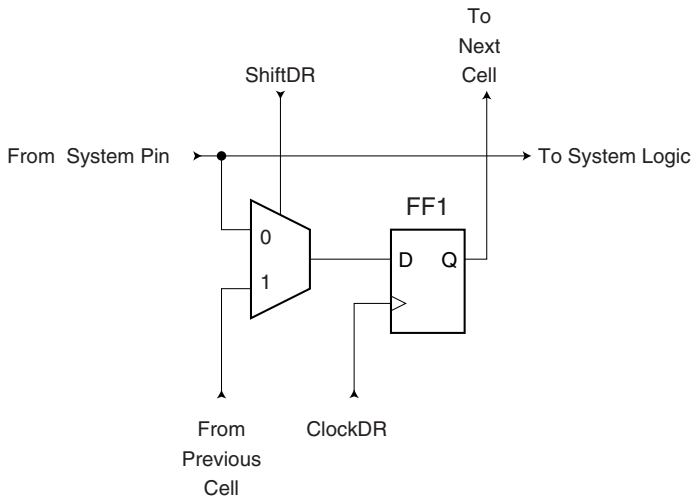

28.6 Boundary-scan Related Register in I/O Memory

28.6.1 MCUCR – MCU Control Register

The MCU Control Register contains control bits for general MCU functions.

Bit	7	6	5	4	3	2	1	0	
0x35 (0x55)	**JTD**	**–**	**–**	**PUD**	**–**	**–**	**IVSEL**	**IVCE**	**MCUCR**
Read/Write	R/W	R	R	R/W	R	R	R/W	R/W	
Initial Value	0	0	0	0	0	0	0	0	

- **Bits 7 – JTD: JTAG Interface Disable**

When this bit is zero, the JTAG interface is enabled if the JTAGEN Fuse is programmed. If this bit is one, the JTAG interface is disabled. In order to avoid unintentional disabling or enabling of the JTAG interface, a timed sequence must be followed when changing this bit: The application software must write this bit to the desired value twice within four cycles to change its value. Note that this bit must not be altered when using the On-chip Debug system.

28.6.2 MCUSR – MCU Status Register

The MCU Status Register provides information on which reset source caused an MCU reset.

Bit	7	6	5	4	3	2	1	0	
0x34 (0x54)	**–**	**–**	**–**	**JTRF**	**WDRF**	**BORF**	**EXTRF**	**PORF**	**MCUSR**
Read/Write	R	R	R	R/W	R/W	R/W	R/W	R/W	
Initial Value	0	0	0	See Bit Description					

- **Bit 4 – JTRF: JTAG Reset Flag**

This bit is set if a reset is being caused by a logic one in the JTAG Reset Register selected by the JTAG instruction AVR_RESET. This bit is reset by a Power-on Reset, or by writing a logic zero to the flag.

28.7 ATmega640/1280/1281/2560/2561 Boundary-scan Order

Table 28-1 on page 302 shows the Scan order between TDI and TDO when the Boundary-scan chain is selected as data path. Bit 0 is the LSB; the first bit scanned in, and the first bit scanned out. The scan order follows the pin-out order as far as possible. Therefore, the bits of Port A and Port K is scanned in the opposite bit order of the other ports. Exceptions from the rules are the Scan chains for the analog circuits, which constitute the most significant bits of the scan chain regardless of which physical pin they are connected to. In Figure 28-3 on page 299, PXn. Data corresponds to FF0, PXn. Control corresponds to FF1, PXn. Bit 4, bit 5, bit 6 and bit 7 of Port F is not in the scan chain, since these pins constitute the TAP pins when the JTAG is enabled.

28.8 Boundary-scan Description Language Files

Boundary-scan Description Language (BSDL) files describe Boundary-scan capable devices in a standard format used by automated test-generation software. The order and function of bits in the Boundary-scan Data Register are included in this description. BSDL files are available for ATmega1281/2561 and ATmega640/1280/2560.

Table 28-1. ATmega640/1280/2560 Boundary-scan Order

Bit Number	Signal Name	Module
164	PG5.Data	Port G
163	PG5.Control	
162	PE0.Data	Port E
161	PE0.Control	
160	PE1.Data	
159	PE1.Control	
158	PE2.Data	
157	PE2.Control	
156	PE3.Data	
155	PE3.Control	
154	PE4.Data	
153	PE4.Control	
152	PE5.Data	
151	PE5.Control	
150	PE6.Data	
149	PE6.Control	
148	PE7.Data	
147	PE7.Control	
146	PH0.Data	Port H
145	PH0.Control	
144	PH1.Data	
143	PH1.Control	
142	PH2.Data	
141	PH2.Control	
140	PH3.Data	
139	PH3.Control	
138	PH4.Data	
137	PH4.Control	
136	PH5.Data	
135	PH5.Control	
134	PH6.Data	
133	PH6.Control	

Table 28-1. ATmega640/1280/2560 Boundary-scan Order (Continued)

Bit Number	Signal Name	Module
132	PB0.Data	Port B
131	PB0.Control	
130	PB1.Data	
129	PB1.Control	
128	PB2.Data	
127	PB2.Control	
126	PB3.Data	
125	PB3.Control	
124	PB4.Data	
123	PB4.Control	
122	PB5.Data	
121	PB5.Control	
120	PB6.Data	
119	PB6.Control	
118	PB7.Data	
117	PB7.Control	
116	PH7.Data	Port H
115	PH7.Control	
114	PG3.Data	Port G
113	PG3.Control	
112	PG4.Data	
111	PG4.Control	
110	RSTT	Reset Logic (Observe Only)
109	PL0.Data	Port L
108	PL0.Control	
107	PL1.Data	
106	PL1.Control	
105	PL2.Data	

Table 28-1. ATmega640/1280/2560 Boundary-scan Order (Continued)

Bit Number	Signal Name	Module
104	PL2.Control	
103	PL3.Data	
102	PL3.Control	
101	PL4.Data	
100	PL4.Control	
99	PL5.Data	
98	PL5.Control	
97	PL6.Data	
96	PL6.Control	
95	PL7.Data	
94	PL7.Control	
93	PD0.Data	Port D
92	PD0.Control	
91	PD1.Data	
90	PD1.Control	
89	PD2.Data	
88	PD2.Control	
87	PD3.Data	
86	PD3.Control	
85	PD4.Data	
84	PD4.Control	
83	PD5.Data	
82	PD5.Control	
81	PD6.Data	
80	PD6.Control	
79	PD7.Data	
78	PD7.Control	
77	PG0.Data	Port G
76	PG0.Control	
75	PG1.Data	
74	PG1.Control	
73	PC0.Data	Port C
72	PC0.Control	
71	PC1.Data	
70	PC1.Control	
69	PC2.Data	

Table 28-1. ATmega640/1280/2560 Boundary-scan Order (Continued)

Bit Number	Signal Name	Module
68	PC2.Control	
67	PC3.Data	
66	PC3.Control	
65	PC4.Data	
64	PC4.Control	
63	PC5.Data	
62	PC5.Control	
61	PC6.Data	
60	PC6.Control	
59	PC7.Data	
58	PC7.Control	
57	PJ0.Data	
56	PJ0.Control	
55	PJ1.Data	
54	PJ1.Control	
53	PJ2.Data	
52	PJ2.Control	
51	PJ3.Data	Port J
50	PJ3.Control	
49	PJ4.Data	
48	PJ4.Control	
47	PJ5.Data	
46	PJ5.Control	
45	PJ6.Data	
44	PJ6.Control	
43	PG2.Data	Port G
42	PG2.Control	
41	PA7.Data	
40	PA7.Control	
39	PA6.Data	
38	PA6.Control	
37	PA5.Data	Port A
36	PA5.Control	
35	PA4.Data	
34	PA4.Control	
33	PA3.Data	

Table 28-1. ATmega640/1280/2560 Boundary-scan Order (Continued)

Bit Number	Signal Name	Module
32	PA3.Control	
31	PA2.Data	
30	PA2.Control	
29	PA1.Data	
28	PA1.Control	
27	PA0.Data	
26	PA0.Control	
25	PJ7.Data	Port J
24	PJ7.Control	
23	PK7.Data	Port K
22	PK7.Control	
21	PK6.Data	
20	PK6.Control	
19	PK5.Data	
18	PK5.Control	
17	PK4.Data	
16	PK4.Control	
15	PK3.Data	
14	PK3.Control	
13	PK2.Data	
12	PK2.Control	
11	PK1.Data	
10	PK1.Control	
9	PK0.Data	
8	PK0.Control	
7	PF3.Data	Port F
6	PF3.Control	
5	PF2.Data	
4	PF2.Control	
3	PF1.Data	
2	PF1.Control	
1	PF0.Data	
0	PF0.Control	

Table 28-2. ATmega1281/2561 Boundary-scan Order

Bit Number	Signal Name	Module
100	PG5.Data	Port G
99	PG5.Control	
98	PE0.Data	Port E
97	PE0.Control	
96	PE1.Data	
95	PE1.Control	
94	PE2.Data	
93	PE2.Control	
92	PE3.Data	
91	PE3.Control	
90	PE4.Data	
89	PE4.Control	
88	PE5.Data	
87	PE5.Control	
86	PE6.Data	
85	PE6.Control	
84	PE7.Data	
83	PE7.Control	
82	PB0.Data	Port B
81	PB0.Control	
80	PB1.Data	
79	PB1.Control	
78	PB2.Data	
77	PB2.Control	
76	PB3.Data	
75	PB3.Control	
74	PB4.Data	
73	PB4.Control	
72	PB5.Data	
71	PB5.Control	
70	PB6.Data	
69	PB6.Control	
68	PB7.Data	
67	PB7.Control	
66	PG3.Data	Port G

Table 28-2. ATmega1281/2561 Boundary-scan Order (Continued)

Bit Number	Signal Name	Module
65	PG3.Control	
64	PG4.Data	
63	PG4.Control	
62	RSTT	Reset Logic (Observe Only)
61	PD0.Data	Port D
60	PD0.Control	
59	PD1.Data	
58	PD1.Control	
57	PD2.Data	
56	PD2.Control	
55	PD3.Data	
54	PD3.Control	
53	PD4.Data	
52	PD4.Control	
51	PD5.Data	
50	PD5.Control	
49	PD6.Data	
48	PD6.Control	
47	PD7.Data	
46	PD7.Control	
45	PG0.Data	Port G
44	PG0.Control	
43	PG1.Data	
42	PG1.Control	
41	PC0.Data	Port C
40	PC0.Control	
39	PC1.Data	
38	PC1.Control	
37	PC2.Data	
36	PC2.Control	
35	PC3.Data	
34	PC3.Control	
33	PC4.Data	
32	PC4.Control	
31	PC5.Data	
30	PC5.Control	

Table 28-2. ATmega1281/2561 Boundary-scan Order (Continued)

Bit Number	Signal Name	Module
29	PC6.Data	
28	PC6.Control	
27	PC7.Data	
26	PC7.Control	
25	PG2.Data	Port G
24	PG2.Control	
23	PA7.Data	Port A
22	PA7.Control	
21	PA6.Data	
20	PA6.Control	
19	PA5.Data	
18	PA5.Control	
17	PA4.Data	
16	PA4.Control	
15	PA3.Data	
14	PA3.Control	
13	PA2.Data	
12	PA2.Control	
11	PA1.Data	
10	PA1.Control	
9	PA0.Data	
8	PA0.Control	
7	PF3.Data	Port F
6	PF3.Control	
5	PF2.Data	
4	PF2.Control	
3	PF1.Data	
2	PF1.Control	
1	PF0.Data	
0	PF0.Control	

29. Boot Loader Support – Read-While-Write Self-Programming

The Boot Loader Support provides a real Read-While-Write Self-Programming mechanism for downloading and uploading program code by the MCU itself. This feature allows flexible application software updates controlled by the MCU using a Flash-resident Boot Loader program. The Boot Loader program can use any available data interface and associated protocol to read code and write (program) that code into the Flash memory, or read the code from the program memory. The program code within the Boot Loader section has the capability to write into the entire Flash, including the Boot Loader memory. The Boot Loader can thus even modify itself, and it can also erase itself from the code if the feature is not needed anymore. The size of the Boot Loader memory is configurable with fuses and the Boot Loader has two separate sets of Boot Lock bits which can be set independently. This gives the user a unique flexibility to select different levels of protection.

29.1 Features

- **Read-While-Write Self-Programming**
- **Flexible Boot Memory Size**
- **High Security (Separate Boot Lock Bits for a Flexible Protection)**
- **Separate Fuse to Select Reset Vector**
- **Optimized Page[(1)] Size**
- **Code Efficient Algorithm**
- **Efficient Read-Modify-Write Support**

Note: 1. A page is a section in the Flash consisting of several bytes (see Table 30-7 on page 328) used during programming. The page organization does not affect normal operation.

29.2 Application and Boot Loader Flash Sections

The Flash memory is organized in two main sections, the Application section and the Boot Loader section (see Figure 29-2 on page 312). The size of the different sections is configured by the BOOTSZ Fuses as shown in Table 29-7 on page 320 and Figure 29-2 on page 312. These two sections can have different level of protection since they have different sets of Lock bits.

29.2.1 Application Section

The Application section is the section of the Flash that is used for storing the application code. The protection level for the Application section can be selected by the application Boot Lock bits (Boot Lock bits 0), see Table 29-2 on page 313. The Application section can never store any Boot Loader code since the SPM instruction is disabled when executed from the Application section.

29.2.2 BLS – Boot Loader Section

While the Application section is used for storing the application code, the The Boot Loader software must be located in the BLS since the SPM instruction can initiate a programming when executing from the BLS only. The SPM instruction can access the entire Flash, including the BLS itself. The protection level for the Boot Loader section can be selected by the Boot Loader Lock bits (Boot Lock bits 1), see Table 29-3 on page 313.

29.3 Read-While-Write and No Read-While-Write Flash Sections

Whether the CPU supports Read-While-Write or if the CPU is halted during a Boot Loader software update is dependent on which address that is being programmed. In addition to the two sections that are configurable by the BOOTSZ Fuses as described above, the Flash is also divided into two fixed sections, the Read-While-Write (RWW) section and the No Read-While-Write (NRWW) section. The limit between the RWW- and NRWW sections is given in Table 29-1 and Figure 29-1 on page 311. The main difference between the two sections is:

- When erasing or writing a page located inside the RWW section, the NRWW section can be read during the operation

- When erasing or writing a page located inside the NRWW section, the CPU is halted during the entire operation

Note that the user software can never read any code that is located inside the RWW section during a Boot Loader software operation. The syntax “Read-While-Write section” refers to which section that is being programmed (erased or written), not which section that actually is being read during a Boot Loader software update.

29.3.1 RWW – Read-While-Write Section

If a Boot Loader software update is programming a page inside the RWW section, it is possible to read code from the Flash, but only code that is located in the NRWW section. During an on-going programming, the software must ensure that the RWW section never is being read. If the user software is trying to read code that is located inside the RWW section (that is, by load program memory, call, or jump instructions or an interrupt) during programming, the software might end up in an unknown state. To avoid this, the interrupts should either be disabled or moved to the Boot Loader section. The Boot Loader section is always located in the NRWW section. The RWW Section Busy bit (RWWSB) in the Store Program Memory Control and Status Register (SPMCSR) will be read as logical one as long as the RWW section is blocked for reading. After a programming is completed, the RWWSB must be cleared by software before reading code located in the RWW section. See “SPMCSR – Store Program Memory Control and Status Register” on page 323. for details on how to clear RWWSB.

29.3.2 NRWW – No Read-While-Write Section

The code located in the NRWW section can be read when the Boot Loader software is updating a page in the RWW section. When the Boot Loader code updates the NRWW section, the CPU is halted during the entire Page Erase or Page Write operation.

Table 29-1. Read-While-Write Features

Which Section does the Z-pointer Address during the Programming?	Which Section can be Read during Programming?	CPU Halted?	Read-While-Write Supported?
RWW Section	NRWW Section	No	Yes
NRWW Section	None	Yes	No

Figure 29-1. Read-While-Write vs. No Read-While-Write

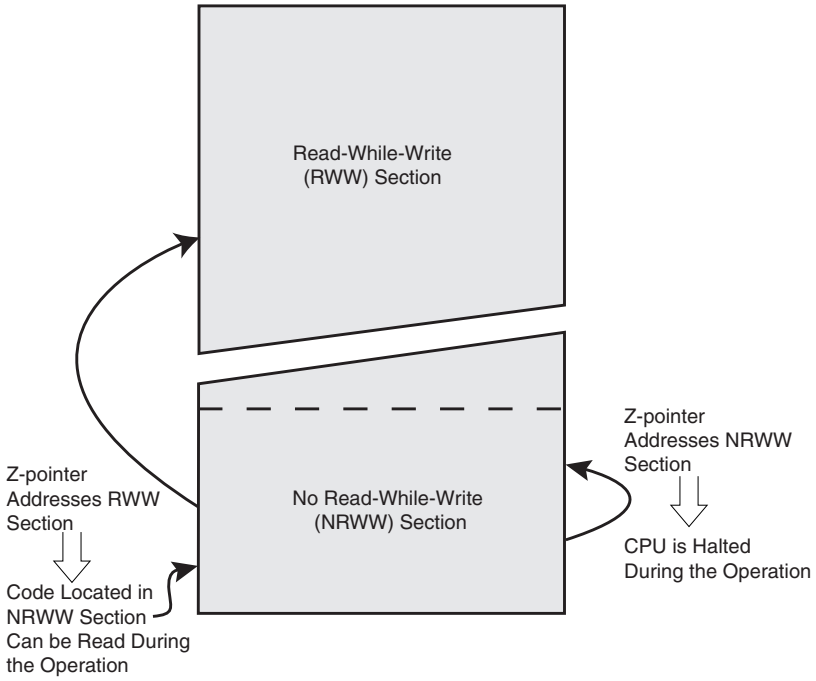

Figure 29-2. Memory Sections

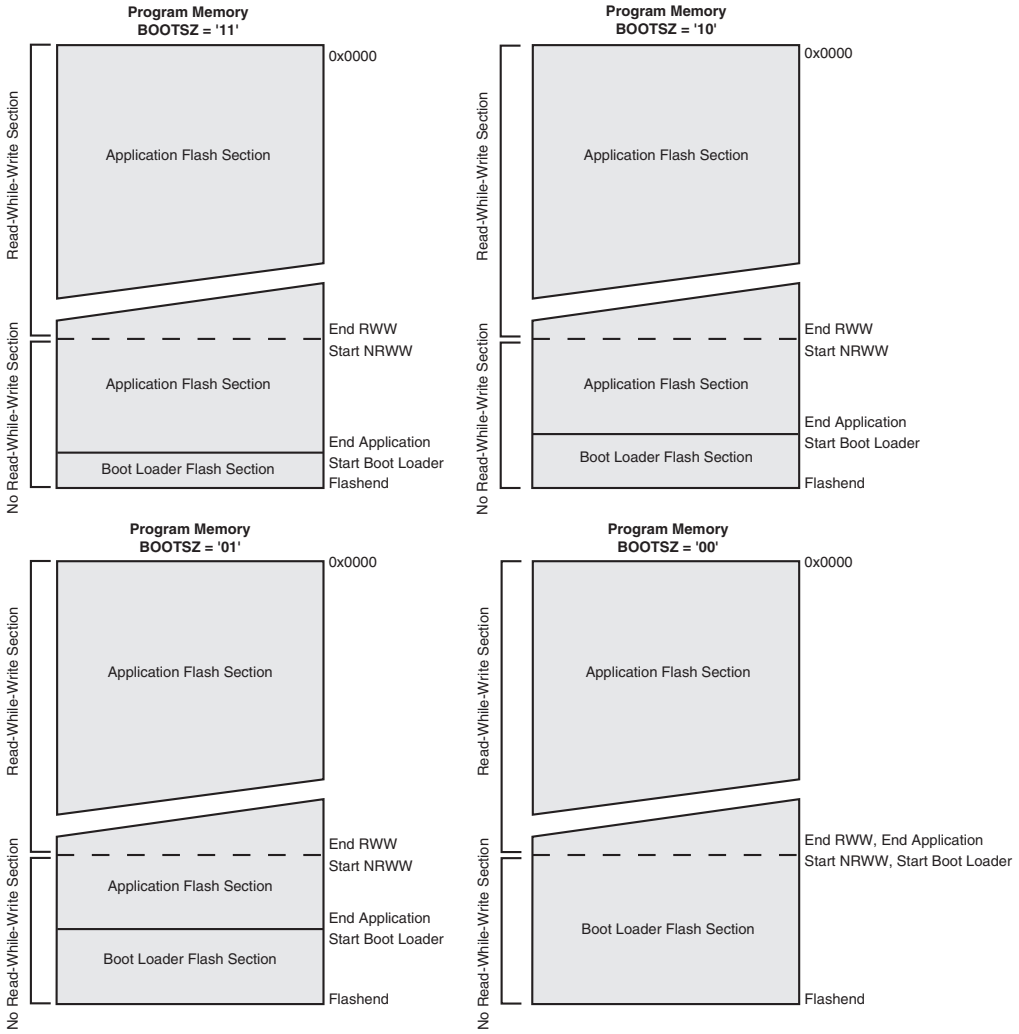

Note: 1. The parameters in the figure above are given in Table 29-7 on page 320.

29.4 Boot Loader Lock Bits

If no Boot Loader capability is needed, the entire Flash is available for application code. The Boot Loader has two separate sets of Boot Lock bits which can be set independently. This gives the user a unique flexibility to select different levels of protection.

The user can select:

- To protect the entire Flash from a software update by the MCU
- To protect only the Boot Loader Flash section from a software update by the MCU
- To protect only the Application Flash section from a software update by the MCU
- Allow software update in the entire Flash

See Table 29-2 on page 313 and Table 29-3 on page 313 for further details. The Boot Lock bits can be set in software and in Serial or Parallel Programming mode, but they can be cleared by a Chip Erase command only. The general Write Lock (Lock Bit mode 2) does not control the programming of the Flash memory by SPM instruction. Similarly, the general Read/Write Lock (Lock Bit mode 1) does not control reading nor writing by (E)LPM/SPM, if it is attempted.

Table 29-2. Boot Lock Bit0 Protection Modes (Application Section)[1]

BLB0 Mode	BLB02	BLB01	Protection
1	1	1	No restrictions for SPM or (E)LPM accessing the Application section.
2	1	0	SPM is not allowed to write to the Application section.
3	0	0	SPM is not allowed to write to the Application section, and (E)LPM executing from the Boot Loader section is not allowed to read from the Application section. If Interrupt Vectors are placed in the Boot Loader section, interrupts are disabled while executing from the Application section.
4	0	1	(E)LPM executing from the Boot Loader section is not allowed to read from the Application section. If Interrupt Vectors are placed in the Boot Loader section, interrupts are disabled while executing from the Application section.

Note: 1. "1" means unprogrammed, "0" means programmed.

Table 29-3. Boot Lock Bit1 Protection Modes (Boot Loader Section)[1]

BLB1 Mode	BLB12	BLB11	Protection
1	1	1	No restrictions for SPM or (E)LPM accessing the Boot Loader section.
2	1	0	SPM is not allowed to write to the Boot Loader section.
3	0	0	SPM is not allowed to write to the Boot Loader section, and (E)LPM executing from the Application section is not allowed to read from the Boot Loader section. If Interrupt Vectors are placed in the Application section, interrupts are disabled while executing from the Boot Loader section.
4	0	1	(E)LPM executing from the Application section is not allowed to read from the Boot Loader section. If Interrupt Vectors are placed in the Application section, interrupts are disabled while executing from the Boot Loader section.

Note: 1. "1" means unprogrammed, "0" means programmed.

29.4.1 Entering the Boot Loader Program

Entering the Boot Loader takes place by a jump or call from the application program. This may be initiated by a trigger such as a command received via USART, or SPI interface. Alternatively, the Boot Reset Fuse can be programmed so that the Reset Vector is pointing to the Boot Flash start address after a reset. In this case, the Boot Loader is started after a reset. After the application code is loaded, the program can start executing the application code. Note that the fuses cannot be changed by the MCU itself. This means that once the Boot Reset Fuse is programmed, the Reset Vector will always point to the Boot Loader Reset and the fuse can only be changed through the serial or parallel programming interface.

Table 29-4. Boot Reset Fuse[1]

BOOTRST	Reset Address
1	Reset Vector = Application Reset (address 0x0000)
0	Reset Vector = Boot Loader Reset (see Table 29-7 on page 320)

Note: 1. "1" means unprogrammed, "0" means programmed.

29.5 Addressing the Flash During Self-Programming

The Z-pointer is used to address the SPM commands. The Z pointer consists of the Z-registers ZL and ZH in the register file, and RAMPZ in the I/O space. The number of bits actually used is implementation dependent. Note that the RAMPZ register is only implemented when the program space is larger than 64Kbytes.

Bit	23	22	21	20	19	18	17	16
	15	14	13	12	11	10	9	8
RAMPZ	**RAMPZ7**	**RAMPZ6**	**RAMPZ5**	**RAMPZ4**	**RAMPZ3**	**RAMPZ2**	**RAMPZ1**	**RAMPZ0**
ZH (R31)	**Z15**	**Z14**	**Z13**	**Z12**	**Z11**	**Z10**	**Z9**	**Z8**
ZL (R30)	**Z7**	**Z6**	**Z5**	**Z4**	**Z3**	**Z2**	**Z1**	**Z0**
	7	6	5	4	3	2	1	0

Since the Flash is organized in pages (see Table 30-7 on page 328), the Program Counter can be treated as having two different sections. One section, consisting of the least significant bits, is addressing the words within a page, while the most significant bits are addressing the pages. This is shown in Figure 29-3. Note that the Page Erase and Page Write operations are addressed independently. Therefore it is of major importance that the Boot Loader software addresses the same page in both the Page Erase and Page Write operation. Once a programming operation is initiated, the address is latched and the Z-pointer can be used for other operations.

The (E)LPM instruction use the Z-pointer to store the address. Since this instruction addresses the Flash byte-by-byte, also bit Z0 of the Z-pointer is used.

Figure 29-3. Addressing the Flash During SPM[(1)]

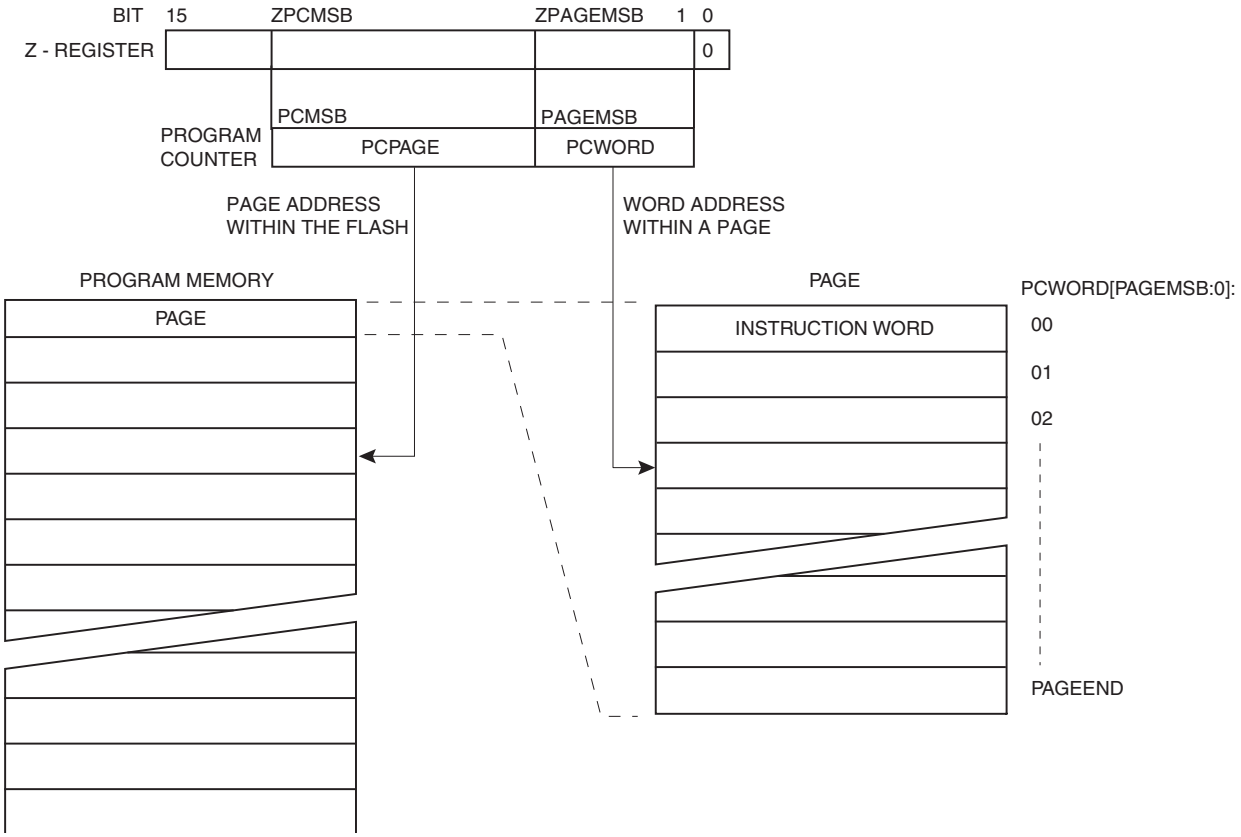

Note: 1. The different variables used in Figure 29-3 are listed in Table 29-9 on page 320.

29.6 Self-Programming the Flash

The program memory is updated in a page by page fashion. Before programming a page with the data stored in the temporary page buffer, the page must be erased. The temporary page buffer is filled one word at a time using SPM and the buffer can be filled either before the Page Erase command or between a Page Erase and a Page Write operation:

Alternative 1, fill the buffer before a Page Erase

- Fill temporary page buffer
- Perform a Page Erase
- Perform a Page Write

Alternative 2, fill the buffer after Page Erase

- Perform a Page Erase
- Fill temporary page buffer
- Perform a Page Write

If only a part of the page needs to be changed, the rest of the page must be stored (for example in the temporary page buffer) before the erase, and then be rewritten. When using alternative 1, the Boot Loader provides an effective Read-Modify-Write feature which allows the user software to first read the page, do the necessary changes, and then write back the modified data. If alternative 2 is used, it is not possible to read the old data while loading since the page is already erased. The temporary page buffer can be accessed in a random sequence. It is essential that the page address used in both the Page Erase and Page Write operation is addressing the same page. See "Simple Assembly Code Example for a Boot Loader" on page 318 for an assembly code example.

29.6.1 Performing Page Erase by SPM

To execute Page Erase, set up the address in the Z-pointer, write "X0000011" to SPMCSR and execute SPM within four clock cycles after writing SPMCSR. The data in R1 and R0 is ignored. The page address must be written to PCPAGE in the Z-register. Other bits in the Z-pointer will be ignored during this operation.

- Page Erase to the RWW section: The NRWW section can be read during the Page Erase
- Page Erase to the NRWW section: The CPU is halted during the operation

29.6.2 Filling the Temporary Buffer (Page Loading)

To write an instruction word, set up the address in the Z-pointer and data in R1:R0, write "00000001" to SPMCSR and execute SPM within four clock cycles after writing SPMCSR. The content of PCWORD in the Z-register is used to address the data in the temporary buffer. The temporary buffer will auto-erase after a Page Write operation or by writing the RWWSRE bit in SPMCSR. It is also erased after a system reset. Note that it is not possible to write more than one time to each address without erasing the temporary buffer.

If the EEPROM is written in the middle of an SPM Page Load operation, all data loaded is still buffered.

29.6.3 Performing a Page Write

To execute Page Write, set up the address in the Z-pointer, write "X0000101" to SPMCSR and execute SPM within four clock cycles after writing SPMCSR. The data in R1 and R0 is ignored. The page address must be written to PCPAGE. Other bits in the Z-pointer must be written to zero during this operation.

- Page Write to the RWW section: The NRWW section can be read during the Page Write
- Page Write to the NRWW section: The CPU is halted during the operation

29.6.4 Using the SPM Interrupt

If the SPM interrupt is enabled, the SPM interrupt will generate a constant interrupt when the SPMEN bit in SPMCSR is cleared. This means that the interrupt can be used instead of polling the SPMCSR Register in soft-

ware. When using the SPM interrupt, the Interrupt Vectors should be moved to the BLS section to avoid that an interrupt is accessing the RWW section when it is blocked for reading. How to move the interrupts is described in "Interrupts" on page 101.

29.6.5 Consideration While Updating BLS

Special care must be taken if the user allows the Boot Loader section to be updated by leaving Boot Lock bit11 unprogrammed. An accidental write to the Boot Loader itself can corrupt the entire Boot Loader, and further software updates might be impossible. If it is not necessary to change the Boot Loader software itself, it is recommended to program the Boot Lock bit11 to protect the Boot Loader software from any internal software changes.

29.6.6 Prevent Reading the RWW Section During Self-Programming

During Self-Programming (either Page Erase or Page Write), the RWW section is always blocked for reading. The user software itself must prevent that this section is addressed during the self programming operation. The RWWSB in the SPMCSR will be set as long as the RWW section is busy. During Self-Programming the Interrupt Vector table should be moved to the BLS as described in "Interrupts" on page 101, or the interrupts must be disabled. Before addressing the RWW section after the programming is completed, the user software must clear the RWWSB by writing the RWWSRE. See "Simple Assembly Code Example for a Boot Loader" on page 318 for an example.

29.6.7 Setting the Boot Loader Lock Bits by SPM

To set the Boot Loader Lock bits and general Lock bits, write the desired data to R0, write "X0001001" to SPMCSR and execute SPM within four clock cycles after writing SPMCSR.

Bit	7	6	5	4	3	2	1	0
R0	**1**	**1**	**BLB12**	**BLB11**	**BLB02**	**BLB01**	**LB2**	**LB1**

See Table 29-2 on page 313 and Table 29-3 on page 313 for how the different settings of the Boot Loader bits affect the Flash access.

If bits 5:0 in R0 are cleared (zero), the corresponding Lock bit will be programmed if an SPM instruction is executed within four cycles after BLBSET and SPMEN are set in SPMCSR. The Z-pointer is don't care during this operation, but for future compatibility it is recommended to load the Z-pointer with 0x0001 (same as used for reading the IO_{ck} bits). For future compatibility it is also recommended to set bits 7 and 6 in R0 to "1" when writing the Lock bits. When programming the Lock bits the entire Flash can be read during the operation.

29.6.8 EEPROM Write Prevents Writing to SPMCSR

Note that an EEPROM write operation will block all software programming to Flash. Reading the Fuses and Lock bits from software will also be prevented during the EEPROM write operation. It is recommended that the user checks the status bit (EEPE) in the EECR Register and verifies that the bit is cleared before writing to the SPMCSR Register.

29.6.9 Reading the Fuse and Lock Bits from Software

It is possible to read both the Fuse and Lock bits from software. To read the Lock bits, load the Z-pointer with 0x0001 and set the BLBSET and SPMEN bits in SPMCSR. When an (E)LPM instruction is executed within three CPU cycles after the BLBSET and SPMEN bits are set in SPMCSR, the value of the Lock bits will be loaded in the destination register. The BLBSET and SPMEN bits will auto-clear upon completion of reading the Lock bits or if no (E)LPM instruction is executed within three CPU cycles or no SPM instruction is executed within four CPU cycles. When BLBSET and SPMEN are cleared, (E)LPM will work as described in the Instruction set Manual.

Bit	7	6	5	4	3	2	1	0
Rd	**–**	**–**	**BLB12**	**BLB11**	**BLB02**	**BLB01**	**LB2**	**LB1**

The algorithm for reading the Fuse Low byte is similar to the one described above for reading the Lock bits. To read the Fuse Low byte, load the Z-pointer with 0x0000 and set the BLBSET and SPMEN bits in SPMCSR. When an (E)LPM instruction is executed within three cycles after the BLBSET and SPMEN bits are set in the SPMCSR, the value of the Fuse Low byte (FLB) will be loaded in the destination register as shown below. Refer to Table 30-5 on page 327 for a detailed description and mapping of the Fuse Low byte.

Bit	7	6	5	4	3	2	1	0
Rd	**FLB7**	**FLB6**	**FLB5**	**FLB4**	**FLB3**	**FLB2**	**FLB1**	**FLB0**

Similarly, when reading the Fuse High byte, load 0x0003 in the Z-pointer. When an (E)LPM instruction is executed within three cycles after the BLBSET and SPMEN bits are set in the SPMCSR, the value of the Fuse High byte (FHB) will be loaded in the destination register as shown below. Refer to Table 30-4 on page 327 for detailed description and mapping of the Fuse High byte.

Bit	7	6	5	4	3	2	1	0
Rd	**FHB7**	**FHB6**	**FHB5**	**FHB4**	**FHB3**	**FHB2**	**FHB1**	**FHB0**

When reading the Extended Fuse byte, load 0x0002 in the Z-pointer. When an (E)LPM instruction is executed within three cycles after the BLBSET and SPMEN bits are set in the SPMCSR, the value of the Extended Fuse byte (EFB) will be loaded in the destination register as shown below. Refer to Table 30-3 on page 326 for detailed description and mapping of the Extended Fuse byte.

Bit	7	6	5	4	3	2	1	0
Rd	**–**	**–**	**–**	**–**	**–**	**EFB2**	**EFB1**	**EFB0**

Fuse and Lock bits that are programmed, will be read as zero. Fuse and Lock bits that are unprogrammed, will be read as one.

29.6.10 Reading the Signature Row from Software

To read the Signature Row from software, load the Z-pointer with the signature byte address given in Table 29-5 on page 317 and set the SIGRD and SPMEN bits in SPMCSR. When an LPM instruction is executed within three CPU cycles after the SIGRD and SPMEN bits are set in SPMCSR, the signature byte value will be loaded in the destination register. The SIGRD and SPMEN bits will auto-clear upon completion of reading the Signature Row Lock bits or if no LPM instruction is executed within three CPU cycles. When SIGRD and SPMEN are cleared, LPM will work as described in the Instruction set Manual.

Table 29-5. Signature Row Addressing

Signature Byte	Z-Pointer Address
Device Signature Byte 1	0x0000
Device Signature Byte 2	0x0002
Device Signature Byte 3	0x0004
RC Oscillator Calibration Byte	0x0001

Note: All other addresses are reserved for future use.

29.6.11 Preventing Flash Corruption

During periods of low V_{CC}, the Flash program can be corrupted because the supply voltage is too low for the CPU and the Flash to operate properly. These issues are the same as for board level systems using the Flash, and the same design solutions should be applied.

A Flash program corruption can be caused by two situations when the voltage is too low. First, a regular write sequence to the Flash requires a minimum voltage to operate correctly. Secondly, the CPU itself can execute instructions incorrectly, if the supply voltage for executing instructions is too low.

Flash corruption can easily be avoided by following these design recommendations (one is sufficient):

1. If there is no need for a Boot Loader update in the system, program the Boot Loader Lock bits to prevent any Boot Loader software updates.
2. Keep the AVR RESET active (low) during periods of insufficient power supply voltage. This can be done by enabling the internal Brown-out Detector (BOD) if the operating voltage matches the detection level. If not, an external low V_{CC} reset protection circuit can be used. If a reset occurs while a write operation is in progress, the write operation will be completed provided that the power supply voltage is sufficient.
3. Keep the AVR core in Power-down sleep mode during periods of low V_{CC}. This will prevent the CPU from attempting to decode and execute instructions, effectively protecting the SPMCSR Register and thus the Flash from unintentional writes.

29.6.12 Programming Time for Flash when Using SPM

The calibrated RC Oscillator is used to time Flash accesses. Table 29-6 shows the typical programming time for Flash accesses from the CPU.

Table 29-6. SPM Programming Time

Symbol	Min Programming Time	Max Programming Time
Flash write (Page Erase, Page Write, and write Lock bits by SPM)	3.7ms	4.5ms

29.6.13 Simple Assembly Code Example for a Boot Loader

```
  ;-the routine writes one page of data from RAM to Flash
  ; the first data location in RAM is pointed to by the Y pointer
  ; the first data location in Flash is pointed to by the Z-pointer
  ;-error handling is not included
  ;-the routine must be placed inside the Boot space
  ; (at least the Do_spm sub routine). Only code inside NRWW section can
  ; be read during Self-Programming (Page Erase and Page Write).
  ;-registers used: r0, r1, temp1 (r16), temp2 (r17), looplo (r24),
  ; loophi (r25), spmcrval (r20)
  ; storing and restoring of registers is not included in the routine
  ; register usage can be optimized at the expense of code size
  ;-It is assumed that either the interrupt table is moved to the Boot
  ; loader section or that the interrupts are disabled.
.equ PAGESIZEB = PAGESIZE*2   ;PAGESIZEB is page size in BYTES, not words
.org SMALLBOOTSTART
Write_page:
  ; Page Erase
  ldi  spmcrval, (1<<PGERS) | (1<<SPMEN)
  call Do_spm

  ; re-enable the RWW section
  ldi  spmcrval, (1<<RWWSRE) | (1<<SPMEN)
  call Do_spm

  ; transfer data from RAM to Flash page buffer
  ldi  looplo, low(PAGESIZEB)   ;init loop variable
  ldi  loophi, high(PAGESIZEB)  ;not required for PAGESIZEB<=256
Wrloop:
  ld   r0, Y+
  ld   r1, Y+
  ldi  spmcrval, (1<<SPMEN)
  call Do_spm
  adiw ZH:ZL, 2
  sbiw loophi:looplo, 2         ;use subi for PAGESIZEB<=256
  brne Wrloop
```

```
  ; execute Page Write
  subi ZL, low(PAGESIZEB)       ;restore pointer
  sbci ZH, high(PAGESIZEB)      ;not required for PAGESIZEB<=256
  ldi  spmcrval, (1<<PGWRT) | (1<<SPMEN)
  call Do_spm

  ; re-enable the RWW section
  ldi  spmcrval, (1<<RWWSRE) | (1<<SPMEN)
  call Do_spm

  ; read back and check, optional
  ldi  looplo, low(PAGESIZEB)   ;init loop variable
  ldi  loophi, high(PAGESIZEB)  ;not required for PAGESIZEB<=256
  subi YL, low(PAGESIZEB)       ;restore pointer
  sbci YH, high(PAGESIZEB)
Rdloop:
  elpm r0, Z+
  ld   r1, Y+
  cpse r0, r1
  jmp  Error
  sbiw loophi:looplo, 1         ;use subi for PAGESIZEB<=256
  brne Rdloop

  ; return to RWW section
  ; verify that RWW section is safe to read
Return:
  in   temp1, SPMCSR
  sbrs temp1, RWWSB     ; If RWWSB is set, the RWW section is not ready yet
  ret
  ; re-enable the RWW section
  ldi  spmcrval, (1<<RWWSRE) | (1<<SPMEN)
  call Do_spm
  rjmp Return

Do_spm:
  ; check for previous SPM complete
Wait_spm:
  in   temp1, SPMCSR
  sbrc temp1, SPMEN
  rjmp Wait_spm
  ; input: spmcrval determines SPM action
  ; disable interrupts if enabled, store status
  in   temp2, SREG
  cli
  ; check that no EEPROM write access is present
Wait_ee:
  sbic EECR, EEPE
  rjmp Wait_ee
  ; SPM timed sequence
  out  SPMCSR, spmcrval
  spm
  ; restore SREG (to enable interrupts if originally enabled)
  out  SREG, temp2
  ret
```

29.6.14 ATmega640 Boot Loader Parameters

In Table 29-7 through Table 29-9 on page 320, the parameters used in the description of the Self-Programming are given.

Table 29-7. Boot Size Configuration, ATmega640[1]

BOOTSZ1	BOOTSZ0	Boot Size	Pages	Appli-cation Flash Section	Boot Loader Flash Section	End Application Section	Boot Reset Address (Start Boot Loader Section)
1	1	512 words	4	0x0000 - 0x7DFF	0x7E00 - 0x7FFF	0x7DFF	0x7E00
1	0	1024 words	8	0x0000 - 0x7BFF	0x7C00 - 0x7FFF	0x7BFF	0x7C00
0	1	2048 words	16	0x0000 - 0x77FF	0x7800 - 0x7FFF	0x77FF	0x7800
0	0	4096 words	32	0x0000 - 0x6FFF	0x7000 - 0x7FFF	0x6FFF	0x7000

Note: 1. The different BOOTSZ Fuse configurations are shown in Figure 29-2 on page 312.

Table 29-8. Read-While-Write Limit, ATmega640

Section[1]	Pages	Address
Read-While-Write section (RWW)	224	0x0000 - 0x6FFF
No Read-While-Write section (NRWW)	32	0x7000 - 0x7FFF

Note: 1. For details about these two section, see "NRWW – No Read-While-Write Section" on page 311 and "RWW – Read-While-Write Section" on page 311.

Table 29-9. Explanation of different variables used in Figure 29-3 on page 314 and the mapping to the Z-pointer, ATmega640

Variable		Corresponding Z-value[2]	Description[1]
PCMSB	14		Most significant bit in the Program Counter. (The Program Counter is 15 bits PC[14:0]).
PAGEMSB	6		Most significant bit which is used to address the words within one page (128 words in a page requires seven bits PC [6:0]).
ZPCMSB		Z15	Bit in Z-pointer that is mapped to PCMSB. Because Z0 is not used, the ZPCMSB equals PCMSB + 1.
ZPAGEMSB		Z7	Bit in Z-pointer that is mapped to PCMSB. Because Z0 is not used, the ZPAGEMSB equals PAGEMSB + 1.
PCPAGE	PC[14:7]	Z15:Z8	Program Counter page address: Page select, for Page Erase and Page Write.
PCWORD	PC[6:0]	Z7:Z1	Program Counter word address: Word select, for filling temporary buffer (must be zero during Page Write operation).

Note: 1. Z0: should be zero for all SPM commands, byte select for the (E)LPM instruction.
2. See "Addressing the Flash During Self-Programming" on page 314 for details about the use of Z-pointer during Self-Programming.

29.6.15 ATmega1280/1281 Boot Loader Parameters

In Table 29-10 and Table 29-11, the parameters used in the description of the Self-Programming are given.

Table 29-10. Boot Size Configuration, ATmega1280/1281[1]

BOOTSZ1	BOOTSZ0	Boot Size	Pages	Appli-cation Flash Section	Boot Loader Flash Section	End Application Section	Boot Reset Address (Start Boot Loader Section)
1	1	512 words	4	0x0000 - 0xFDFF	0xFE00 - 0xFFFF	0xFDFF	0xFE00
1	0	1024 words	8	0x0000 - 0xFBFF	0xFC00 - 0xFFFF	0xFBFF	0xFC00
0	1	2048 words	16	0x0000 - 0xF7FF	0xF800 - 0xFFFF	0xF7FF	0xF800
0	0	4096 words	32	0x0000 - 0xEFFF	0xF000 - 0xFFFF	0xEFFF	0xF000

Note: 1. The different BOOTSZ Fuse configurations are shown in Figure 29-2 on page 312.

Table 29-11. Read-While-Write Limit, ATmega1280/1281

Section[1]	Pages	Address
Read-While-Write section (RWW)	480	0x0000 - 0xEFFF
No Read-While-Write section (NRWW)	32	0xF000 - 0xFFFF

Note: 1. For details about these two section, see "NRWW – No Read-While-Write Section" on page 311 and "RWW – Read-While-Write Section" on page 311.

Table 29-12. Explanation of different variables used in Figure 29-3 on page 314 and the mapping to the Z-pointer, ATmega1280/1281

Variable		Corresponding Z-value[2]	Description[1]
PCMSB	15		Most significant bit in the Program Counter. (The Program Counter is 16 bits PC[15:0])
PAGEMSB	6		Most significant bit which is used to address the words within one page (128 words in a page requires seven bits PC [6:0]).
ZPCMSB		Z16[3]	Bit in Z-pointer that is mapped to PCMSB. Because Z0 is not used, the ZPCMSB equals PCMSB + 1.
ZPAGEMSB		Z7	Bit in Z-pointer that is mapped to PCMSB. Because Z0 is not used, the ZPAGEMSB equals PAGEMSB + 1.
PCPAGE	PC[15:7]	Z16[3]:Z8	Program Counter page address: Page select, for Page Erase and Page Write
PCWORD	PC[6:0]	Z7:Z1	Program Counter word address: Word select, for filling temporary buffer (must be zero during Page Write operation)

Notes: 1. Z0: should be zero for all SPM commands, byte select for the (E)LPM instruction.
2. See "Addressing the Flash During Self-Programming" on page 314 for details about the use of Z-pointer during Self-Programming.
3. The Z-register is only 16 bits wide. Bit 16 is located in the RAMPZ register in the I/O map.

29.6.16 ATmega2560/2561 Boot Loader Parameters

In Table 29-13 through Table 29-15, the parameters used in the description of the Self-Programming are given.

Table 29-13. Boot Size Configuration, ATmega2560/2561[1]

BOOTSZ1	BOOTSZ0	Boot Size	Pages	Appli-cation Flash Section	Boot Loader Flash Section	End Application Section	Boot Reset Address (Start Boot Loader Section)
1	1	512 words	4	0x00000 - 0x1FDFF	0x1FE00 - 0x1FFFF	0x1FDFF	0x1FE00
1	0	1024 words	8	0x00000 - 0x1FBFF	0x1FC00 - 0x1FFFF	0x1FBFF	0x1FC00
0	1	2048 words	16	0x00000 - 0x1F7FF	0x1F800 - 0x1FFFF	0x1F7FF	0x1F800
0	0	4096 words	32	0x00000 - 0x1EFFF	0x1F000 - 0x1FFFF	0x1EFFF	0x1F000

Note: 1. The different BOOTSZ Fuse configurations are shown in Figure 29-2 on page 312.

Table 29-14. Read-While-Write Limit, ATmega2560/2561

Section[1]	Pages	Address
Read-While-Write section (RWW)	992	0x00000 - 0x1EFFF
No Read-While-Write section (NRWW)	32	0x1F000 - 0x1FFFF

Note: 1. For details about these two section, see "NRWW – No Read-While-Write Section" on page 311 and "RWW – Read-While-Write Section" on page 311.

Table 29-15. Explanation of different variables used in Figure 29-3 on page 314 and the mapping to the Z-pointer, ATmega2560/2561

Variable		Corresponding Z-value[2]	Description[1]
PCMSB	16		Most significant bit in the Program Counter. (The Program Counter is 17 bits PC[16:0]).
PAGEMSB	6		Most significant bit which is used to address the words within one page (128 words in a page requires seven bits PC [6:0]).
ZPCMSB		Z17:Z16[3]	Bit in Z-pointer that is mapped to PCMSB. Because Z0 is not used, the ZPCMSB equals PCMSB + 1.
ZPAGEMSB		Z7	Bit in Z-pointer that is mapped to PCMSB. Because Z0 is not used, the ZPAGEMSB equals PAGEMSB + 1.
PCPAGE	PC[16:7]	Z17[3]:Z8	Program Counter page address: Page select, for Page Erase and Page Write.
PCWORD	PC[6:0]	Z7:Z1	Program Counter word address: Word select, for filling temporary buffer (must be zero during Page Write operation).

Notes: 1. Z0: should be zero for all SPM commands, byte select for the (E)LPM instruction.
2. See "Addressing the Flash During Self-Programming" on page 314 for details about the use of Z-pointer during Self-Programming.
3. The Z-register is only 16 bits wide. Bit 16 is located in the RAMPZ register in the I/O map.

29.7 Register Description

29.7.1 SPMCSR – Store Program Memory Control and Status Register

The Store Program Memory Control and Status Register contains the control bits needed to control the Boot Loader operations.

Bit	7	6	5	4	3	2	1	0	
0x37 (0x57)	**SPMIE**	**RWWSB**	**SIGRD**	**RWWSRE**	**BLBSET**	**PGWRT**	**PGERS**	**SPMEN**	**SPMCSR**
Read/Write	R/W	R	R/W	R/W	R/W	R/W	R/W	R/W	
Initial Value	0	0	0	0	0	0	0	0	

- **Bit 7 – SPMIE: SPM Interrupt Enable**

When the SPMIE bit is written to one, and the I-bit in the Status Register is set (one), the SPM ready interrupt will be enabled. The SPM ready Interrupt will be executed as long as the SPMEN bit in the SPMCSR Register is cleared.

- **Bit 6 – RWWSB: Read-While-Write Section Busy**

When a Self-Programming (Page Erase or Page Write) operation to the RWW section is initiated, the RWWSB will be set (one) by hardware. When the RWWSB bit is set, the RWW section cannot be accessed. The RWWSB bit will be cleared if the RWWSRE bit is written to one after a Self-Programming operation is completed. Alternatively the RWWSB bit will automatically be cleared if a page load operation is initiated.

- **Bit 5 – SIGRD: Signature Row Read**

If this bit is written to one at the same time as SPMEN, the next LPM instruction within three clock cycles will read a byte from the signature row into the destination register. see “Reading the Signature Row from Software” on page 317 for details. An SPM instruction within four cycles after SIGRD and SPMEN are set will have no effect. This operation is reserved for future use and should not be used.

- **Bit 4 – RWWSRE: Read-While-Write Section Read Enable**

When programming (Page Erase or Page Write) to the RWW section, the RWW section is blocked for reading (the RWWSB will be set by hardware). To re-enable the RWW section, the user software must wait until the programming is completed (SPMEN will be cleared). Then, if the RWWSRE bit is written to one at the same time as SPMEN, the next SPM instruction within four clock cycles re-enables the RWW section. The RWW section cannot be re-enabled while the Flash is busy with a Page Erase or a Page Write (SPMEN is set). If the RWWSRE bit is written while the Flash is being loaded, the Flash load operation will abort and the data loaded will be lost.

- **Bit 3 – BLBSET: Boot Lock Bit Set**

If this bit is written to one at the same time as SPMEN, the next SPM instruction within four clock cycles sets Boot Lock bits, according to the data in R0. The data in R1 and the address in the Z-pointer are ignored. The BLBSET bit will automatically be cleared upon completion of the Lock bit set, or if no SPM instruction is executed within four clock cycles.

An (E)LPM instruction within three cycles after BLBSET and SPMEN are set in the SPMCSR Register, will read either the Lock bits or the Fuse bits (depending on Z0 in the Z-pointer) into the destination register. See “Reading the Fuse and Lock Bits from Software” on page 316 for details.

- **Bit 2 – PGWRT: Page Write**

If this bit is written to one at the same time as SPMEN, the next SPM instruction within four clock cycles executes Page Write, with the data stored in the temporary buffer. The page address is taken from the high part of the Z-pointer. The data in R1 and R0 are ignored. The PGWRT bit will auto-clear upon completion of a Page Write, or if no SPM instruction is executed within four clock cycles. The CPU is halted during the entire Page Write operation if the NRWW section is addressed.

- **Bit 1 – PGERS: Page Erase**

If this bit is written to one at the same time as SPMEN, the next SPM instruction within four clock cycles executes Page Erase. The page address is taken from the high part of the Z-pointer. The data in R1 and R0 are ignored. The PGERS bit will auto-clear upon completion of a Page Erase, or if no SPM instruction is executed within four clock cycles. The CPU is halted during the entire Page Write operation if the NRWW section is addressed.

- **Bit 0 – SPMEN: Store Program Memory Enable**

This bit enables the SPM instruction for the next four clock cycles. If written to one together with either RWWSRE, BLBSET, PGWRT' or PGERS, the following SPM instruction will have a special meaning, see description above. If only SPMEN is written, the following SPM instruction will store the value in R1:R0 in the temporary page buffer addressed by the Z-pointer. The LSB of the Z-pointer is ignored. The SPMEN bit will auto-clear upon completion of an SPM instruction, or if no SPM instruction is executed within four clock cycles. During Page Erase and Page Write, the SPMEN bit remains high until the operation is completed.

Writing any other combination than “10001”, “01001”, “00101”, “00011” or “00001” in the lower five bits will have no effect.

Note: Only one SPM instruction should be active at any time.

30. Memory Programming

30.1 Program And Data Memory Lock Bits

The ATmega640/1280/1281/2560/2561 provides six Lock bits which can be left unprogrammed ("1") or can be programmed ("0") to obtain the additional features listed in Table 30-2. The Lock bits can only be erased to "1" with the Chip Erase command.

Table 30-1. Lock Bit Byte[1]

Lock Bit Byte	Bit No	Description	Default Value
	7	–	1 (unprogrammed)
	6	–	1 (unprogrammed)
BLB12	5	Boot Lock bit	1 (unprogrammed)
BLB11	4	Boot Lock bit	1 (unprogrammed)
BLB02	3	Boot Lock bit	1 (unprogrammed)
BLB01	2	Boot Lock bit	1 (unprogrammed)
LB2	1	Lock bit	1 (unprogrammed)
LB1	0	Lock bit	1 (unprogrammed)

Note: 1. "1" means unprogrammed, "0" means programmed

Table 30-2. Lock Bit Protection Modes[1][2]

Memory Lock Bits			Protection Type
LB Mode	**LB2**	**LB1**	
1	1	1	No memory lock features enabled.
2	1	0	Further programming of the Flash and EEPROM is disabled in Parallel and Serial Programming mode. The Fuse bits are locked in both Serial and Parallel Programming mode.[1]
3	0	0	Further programming and verification of the Flash and EEPROM is disabled in Parallel and Serial Programming mode. The Boot Lock bits and Fuse bits are locked in both Serial and Parallel Programming mode.[1]
BLB0 Mode	**BLB02**	**BLB01**	
1	1	1	No restrictions for SPM or (E)LPM accessing the Application section.
2	1	0	SPM is not allowed to write to the Application section.
3	0	0	SPM is not allowed to write to the Application section, and (E)LPM executing from the Boot Loader section is not allowed to read from the Application section. If Interrupt Vectors are placed in the Boot Loader section, interrupts are disabled while executing from the Application section.
4	0	1	(E)LPM executing from the Boot Loader section is not allowed to read from the Application section. If Interrupt Vectors are placed in the Boot Loader section, interrupts are disabled while executing from the Application section.

Table 30-2. Lock Bit Protection Modes[1][2] (Continued)

Memory Lock Bits			Protection Type
BLB1 Mode	**BLB12**	**BLB11**	
1	1	1	No restrictions for SPM or (E)LPM accessing the Boot Loader section.
2	1	0	SPM is not allowed to write to the Boot Loader section.
3	0	0	SPM is not allowed to write to the Boot Loader section, and (E)LPM executing from the Application section is not allowed to read from the Boot Loader section. If Interrupt Vectors are placed in the Application section, interrupts are disabled while executing from the Boot Loader section.
4	0	1	(E)LPM executing from the Application section is not allowed to read from the Boot Loader section. If Interrupt Vectors are placed in the Application section, interrupts are disabled while executing from the Boot Loader section.

Notes: 1. Program the Fuse bits and Boot Lock bits before programming the LB1 and LB2.
2. "1" means unprogrammed, "0" means programmed.

30.2 Fuse Bits

The ATmega640/1280/1281/2560/2561 has three Fuse bytes. Table 30-3 through Table 30-5 on page 327 describe briefly the functionality of all the fuses and how they are mapped into the Fuse bytes. Note that the fuses are read as logical zero, "0", if they are programmed.

Table 30-3. Extended Fuse Byte

Extended Fuse Byte	Bit No	Description	Default Value
–	7	–	1
–	6	–	1
–	5	–	1
–	4	–	1
–	3	–	1
BODLEVEL2[1]	2	Brown-out Detector trigger level	1 (unprogrammed)
BODLEVEL1[1]	1	Brown-out Detector trigger level	1 (unprogrammed)
BODLEVEL0[1]	0	Brown-out Detector trigger level	1 (unprogrammed)

Note: 1. See "System and Reset Characteristics" on page 360 for BODLEVEL Fuse decoding.

Table 30-4. Fuse High Byte

Fuse High Byte	Bit No	Description	Default Value
OCDEN[4]	7	Enable OCD	1 (unprogrammed, OCD disabled)
JTAGEN	6	Enable JTAG	0 (programmed, JTAG enabled)
SPIEN[1]	5	Enable Serial Program and Data Downloading	0 (programmed, SPI prog. enabled)
WDTON[3]	4	Watchdog Timer always on	1 (unprogrammed)
EESAVE	3	EEPROM memory is preserved through the Chip Erase	1 (unprogrammed, EEPROM not preserved)
BOOTSZ1	2	Select Boot Size (see Table 30-9 on page 329 for details)	0 (programmed)[2]
BOOTSZ0	1	Select Boot Size (see Table 30-9 on page 329 for details)	0 (programmed)[2]
BOOTRST	0	Select Reset Vector	1 (unprogrammed)

Notes:
1. The SPIEN Fuse is not accessible in serial programming mode.
2. The default value of BOOTSZ1:0 results in maximum Boot Size. See Table 29-7 on page 320 for details.
3. See "WDTCSR – Watchdog Timer Control Register" on page 65 for details.
4. Never ship a product with the OCDEN Fuse programmed regardless of the setting of Lock bits and JTAGEN Fuse. A programmed OCDEN Fuse enables some parts of the clock system to be running in all sleep modes. This may increase the power consumption.

Table 30-5. Fuse Low Byte

Fuse Low Byte	Bit No	Description	Default Value
CKDIV8[4]	7	Divide clock by 8	0 (programmed)
CKOUT[3]	6	Clock output	1 (unprogrammed)
SUT1	5	Select start-up time	1 (unprogrammed)[1]
SUT0	4	Select start-up time	0 (programmed)[1]
CKSEL3	3	Select Clock source	0 (programmed)[2]
CKSEL2	2	Select Clock source	0 (programmed)[2]
CKSEL1	1	Select Clock source	1 (unprogrammed)[2]
CKSEL0	0	Select Clock source	0 (programmed)[2]

Notes:
1. The default value of SUT1:0 results in maximum start-up time for the default clock source. See "System and Reset Characteristics" on page 360 for details.
2. The default setting of CKSEL3:0 results in internal RC Oscillator @ 8MHz. See Table 10-1 on page 40 for details.
3. The CKOUT Fuse allow the system clock to be output on PORTE7. See "Clock Output Buffer" on page 47 for details.
4. See "System Clock Prescaler" on page 47 for details.

The status of the Fuse bits is not affected by Chip Erase. Note that the Fuse bits are locked if Lock bit1 (LB1) is programmed. Program the Fuse bits before programming the Lock bits.

30.2.1 Latching of Fuses

The fuse values are latched when the device enters programming mode and changes of the fuse values will have no effect until the part leaves Programming mode. This does not apply to the EESAVE Fuse which will take effect once it is programmed. The fuses are also latched on Power-up in Normal mode.

30.3 Signature Bytes

All Atmel microcontrollers have a three-byte signature code which identifies the device. This code can be read in both serial and parallel mode, also when the device is locked. The three bytes reside in a separate address space. For the ATmega640/1280/1281/2560/2561 the signature bytes are given in Table 30-6.

Table 30-6. Device and JTAG ID

	Signature Bytes Address			JTAG	
Part	**0x000**	**0x001**	**0x002**	**Part Number**	**Manufacture ID**
ATmega640	0x1E	0x96	0x08	9608	0x1F
ATmega1280	0x1E	0x97	0x03	9703	0x1F
ATmega1281	0x1E	0x97	0x04	9704	0x1F
ATmega2560	0x1E	0x98	0x01	9801	0x1F
ATmega2561	0x1E	0x98	0x02	9802	0x1F

30.4 Calibration Byte

The ATmega640/1280/1281/2560/2561 has a byte calibration value for the internal RC Oscillator. This byte resides in the high byte of address 0x000 in the signature address space. During reset, this byte is automatically written into the OSCCAL Register to ensure correct frequency of the calibrated RC Oscillator.

30.5 Page Size

Table 30-7. No. of Words in a Page and No. of Pages in the Flash

Flash Size	Page Size	PCWORD	No. of Pages	PCPAGE	PCMSB
128K words (256Kbytes)	128 words	PC[6:0]	1024	PC[16:7]	16

Table 30-8. No. of Words in a Page and No. of Pages in the EEPROM

EEPROM Size	Page Size	PCWORD	No. of Pages	PCPAGE	EEAMSB
4Kbytes	8 bytes	EEA[2:0]	512	EEA[11:3]	11

30.6 Parallel Programming Parameters, Pin Mapping, and Commands

This section describes how to parallel program and verify Flash Program memory, EEPROM Data memory, Memory Lock bits, and Fuse bits in the ATmega640/1280/1281/2560/2561. Pulses are assumed to be at least 250ns unless otherwise noted.

30.6.1 Signal Names

In this section, some pins of the ATmega640/1280/1281/2560/2561 are referenced by signal names describing their functionality during parallel programming, see Figure 30-1 and Table 30-9 on page 329. Pins not described in the following table are referenced by pin names.

The XA1/XA0 pins determine the action executed when the XTAL1 pin is given a positive pulse. The bit coding is shown in Table 30-12 on page 330.

When pulsing $\overline{WR}$ or $\overline{OE}$, the command loaded determines the action executed. The different commands are shown in Table 30-13 on page 330.

Figure 30-1. Parallel Programming[1]

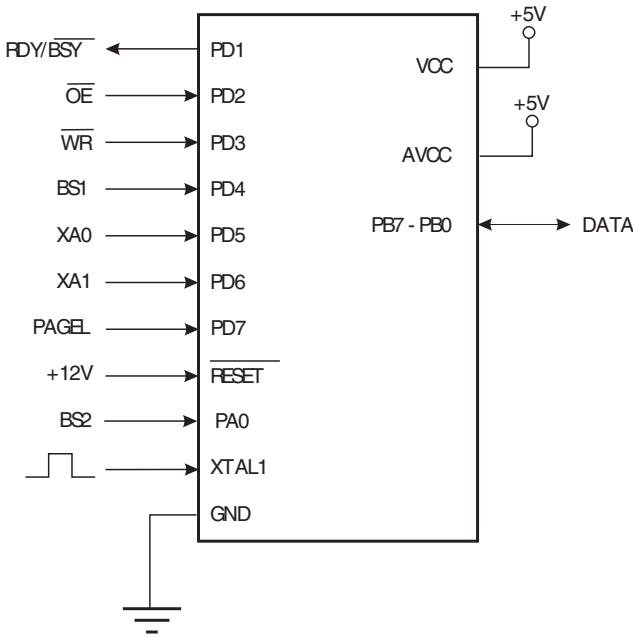

Note: 1. Unused Pins should be left floating.

Table 30-9. Pin Name Mapping

Signal Name in Programming Mode	Pin Name	I/O	Function
RDY/$\overline{\text{BSY}}$	PD1	O	0: Device is busy programming, 1: Device is ready for new command
$\overline{\text{OE}}$	PD2	I	Output Enable (Active low)
$\overline{\text{WR}}$	PD3	I	Write Pulse (Active low)
BS1	PD4	I	Byte Select 1
XA0	PD5	I	XTAL Action Bit 0
XA1	PD6	I	XTAL Action Bit 1
PAGEL	PD7	I	Program Memory and EEPROM data Page Load
BS2	PA0	I	Byte Select 2
DATA	PB7-0	I/O	Bi-directional Data bus (Output when $\overline{\text{OE}}$ is low)

Table 30-10. BS2 and BS1 Encoding

BS2	BS1	Flash / EEPROM Address	Flash Data Loading / Reading	Fuse Programming	Reading Fuse and Lock Bits
0	0	Low Byte	Low Byte	Low Byte	Fuse Low Byte
0	1	High Byte	High Byte	High Byte	Lockbits
1	0	Extended High Byte	Reserved	Extended Byte	Extended Fuse Byte
1	1	Reserved	Reserved	Reserved	Fuse High Byte

Table 30-11. Pin Values Used to Enter Programming Mode

Pin	Symbol	Value
PAGEL	Prog_enable[3]	0
XA1	Prog_enable[2]	0
XA0	Prog_enable[1]	0
BS1	Prog_enable[0]	0

Table 30-12. XA1 and XA0 Enoding

XA1	XA0	Action when XTAL1 is Pulsed
0	0	Load Flash or EEPROM Address (High or low address byte determined by BS2 and BS1)
0	1	Load Data (High or Low data byte for Flash determined by BS1)
1	0	Load Command
1	1	No Action, Idle

Table 30-13. Command Byte Bit Encoding

Command Byte	Command Executed
1000 0000	Chip Erase
0100 0000	Write Fuse bits
0010 0000	Write Lock bits
0001 0000	Write Flash
0001 0001	Write EEPROM
0000 1000	Read Signature Bytes and Calibration byte
0000 0100	Read Fuse and Lock bits
0000 0010	Read Flash
0000 0011	Read EEPROM

30.7 Parallel Programming

30.7.1 Enter Programming Mode

The following algorithm puts the device in parallel programming mode:

1. Apply 4.5V - 5.5V between V_{CC} and GND.
2. Set $\overline{\text{RESET}}$ to “0” and toggle XTAL1 at least six times.
3. Set the Prog_enable pins listed in Table 30-11 to “0000” and wait at least 100ns.
4. Apply 11.5V - 12.5V to $\overline{\text{RESET}}$. Any activity on Prog_enable pins within 100ns after +12V has been applied to $\overline{\text{RESET}}$, will cause the device to fail entering programming mode.
5. Wait at least 50µs before sending a new command.

30.7.2 Considerations for Efficient Programming

The loaded command and address are retained in the device during programming. For efficient programming, the following should be considered.

- The command needs only be loaded once when writing or reading multiple memory locations
- Skip writing the data value 0xFF, that is the contents of the entire EEPROM (unless the EESAVE Fuse is programmed) and Flash after a Chip Erase
- Address high byte needs only be loaded before programming or reading a new 256 word window in Flash or 256 byte EEPROM. This consideration also applies to Signature bytes reading

30.7.3 Chip Erase

The Chip Erase will erase the Flash and EEPROM[(1)] memories plus Lock bits. The Lock bits are not reset until the program memory has been completely erased. The Fuse bits are not changed. A Chip Erase must be performed before the Flash and/or EEPROM are reprogrammed.

Note: 1. The EEPRPOM memory is preserved during Chip Erase if the EESAVE Fuse is programmed.

Load Command “Chip Erase”

1. Set XA1, XA0 to “10”. This enables command loading.
2. Set BS1 to “0”.
3. Set DATA to “1000 0000”. This is the command for Chip Erase.
4. Give XTAL1 a positive pulse. This loads the command.
5. Give $\overline{WR}$ a negative pulse. This starts the Chip Erase. RDY/$\overline{BSY}$ goes low.
6. Wait until RDY/$\overline{BSY}$ goes high before loading a new command.

30.7.4 Programming the Flash

The Flash is organized in pages, see Table 30-7 on page 328. When programming the Flash, the program data is latched into a page buffer. This allows one page of program data to be programmed simultaneously. The following procedure describes how to program the entire Flash memory:

A. Load Command “Write Flash”

1. Set XA1, XA0 to “10”. This enables command loading.
2. Set BS1 to “0”.
3. Set DATA to “0001 0000”. This is the command for Write Flash.
4. Give XTAL1 a positive pulse. This loads the command.

B. Load Address Low byte (Address bits 7:0)

1. Set XA1, XA0 to “00”. This enables address loading.
2. Set BS2, BS1 to “00”. This selects the address low byte.
3. Set DATA = Address low byte (0x00 - 0xFF).
4. Give XTAL1 a positive pulse. This loads the address low byte.

C. Load Data Low Byte

1. Set XA1, XA0 to “01”. This enables data loading.
2. Set DATA = Data low byte (0x00 - 0xFF).
3. Give XTAL1 a positive pulse. This loads the data byte.

D. Load Data High Byte

1. Set BS1 to “1”. This selects high data byte.
2. Set XA1, XA0 to “01”. This enables data loading.
3. Set DATA = Data high byte (0x00 - 0xFF).
4. Give XTAL1 a positive pulse. This loads the data byte.

E. Latch Data

1. Set BS1 to “1”. This selects high data byte.
2. Give PAGEL a positive pulse. This latches the data bytes. See Figure 30-3 on page 333 for signal waveforms.

F. Repeat B through E until the entire buffer is filled or until all data within the page is loaded

While the lower bits in the address are mapped to words within the page, the higher bits address the pages within the FLASH. This is illustrated in Figure 30-2 on page 333. Note that if less than eight bits are required to address words in the page (pagesize < 256), the most significant bit(s) in the address low byte are used to address the page when performing a Page Write.

G. Load Address High byte (Address bits15:8)

1. Set XA1, XA0 to “00”. This enables address loading.
2. Set BS2, BS1 to “01”. This selects the address high byte.
3. Set DATA = Address high byte (0x00 - 0xFF).
4. Give XTAL1 a positive pulse. This loads the address high byte.

H. Load Address Extended High byte (Address bits 23:16)

1. Set XA1, XA0 to “00”. This enables address loading.
2. Set BS2, BS1 to “10”. This selects the address extended high byte.
3. Set DATA = Address extended high byte (0x00 - 0xFF).
4. Give XTAL1 a positive pulse. This loads the address high byte.

I. Program Page

1. Set BS2, BS1 to “00”.
2. Give $\overline{WR}$ a negative pulse. This starts programming of the entire page of data. RDY/$\overline{BSY}$ goes low.
3. Wait until RDY/$\overline{BSY}$ goes high (see Figure 30-3 on page 333 for signal waveforms).

J. Repeat B through I until the entire Flash is programmed or until all data has been programmed

K. End Page Programming

1. 1. Set XA1, XA0 to “10”. This enables command loading.
2. Set DATA to “0000 0000”. This is the command for No Operation.
3. Give XTAL1 a positive pulse. This loads the command, and the internal write signals are reset.

Figure 30-2. Addressing the Flash Which is Organized in Pages[1]

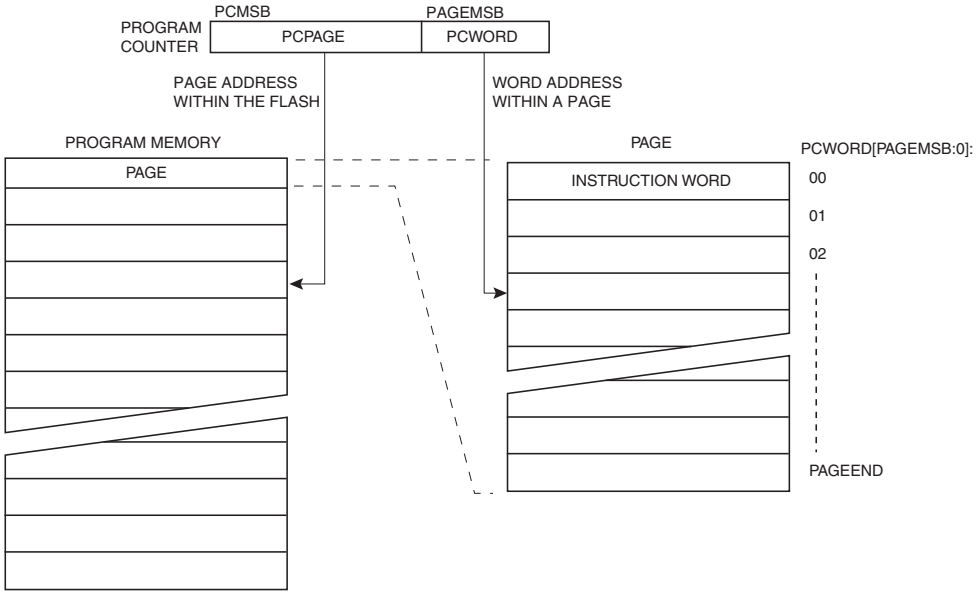

Note: 1. PCPAGE and PCWORD are listed in Table 30-7 on page 328.

Figure 30-3. Programming the Flash Waveforms[1]

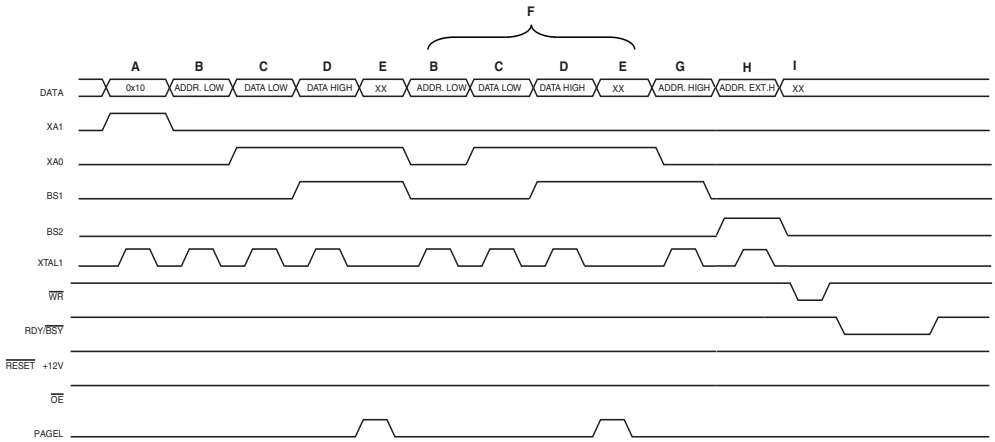

Note: 1. “XX” is don’t care. The letters refer to the programming description above.

30.7.5 Programming the EEPROM

The EEPROM is organized in pages, see Table 30-8 on page 328. When programming the EEPROM, the program data is latched into a page buffer. This allows one page of data to be programmed simultaneously. The programming algorithm for the EEPROM data memory is as follows (refer to “Programming the Flash” on page 331 for details on Command, Address and Data loading):

1. A: Load Command “0001 0001”.
2. G: Load Address High Byte (0x00 - 0xFF).
3. B: Load Address Low Byte (0x00 - 0xFF).
4. C: Load Data (0x00 - 0xFF).
5. E: Latch data (give PAGEL a positive pulse).

K: Repeat 3 through 5 until the entire buffer is filled.

L: Program EEPROM page.

1. Set BS2, BS1 to “00”.
2. Give $\overline{WR}$ a negative pulse. This starts programming of the EEPROM page. RDY/$\overline{BSY}$ goes low.
3. Wait until to RDY/$\overline{BSY}$ goes high before programming the next page (see Figure 30-4 for signal waveforms).

Figure 30-4. Programming the EEPROM Waveforms

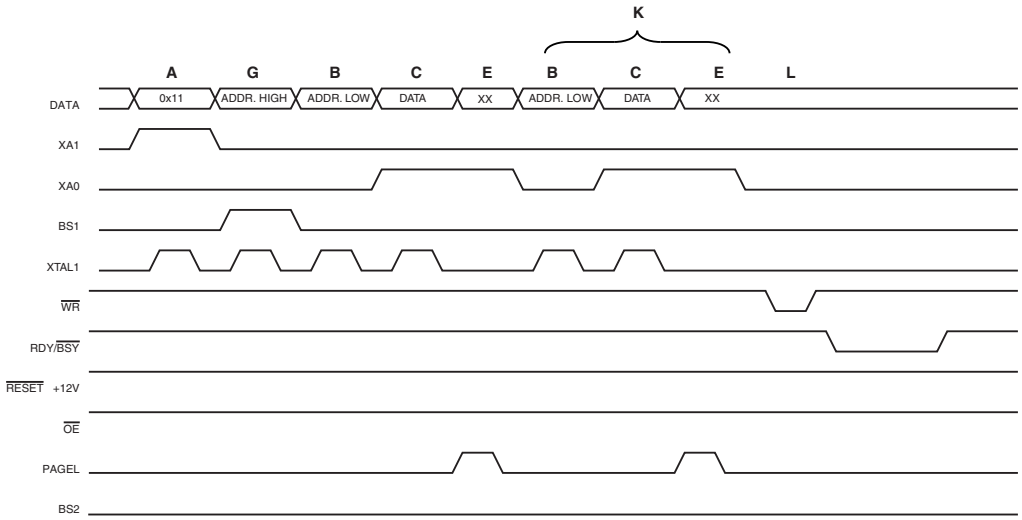

30.7.6 Reading the Flash

The algorithm for reading the Flash memory is as follows (refer to “Programming the Flash” on page 331 for details on Command and Address loading):

1. A: Load Command “0000 0010”.
2. H: Load Address Extended Byte (0x00- 0xFF).
3. G: Load Address High Byte (0x00 - 0xFF).
4. B: Load Address Low Byte (0x00 - 0xFF).
5. Set $\overline{OE}$ to “0”, and BS1 to “0”. The Flash word low byte can now be read at DATA.
6. Set BS to “1”. The Flash word high byte can now be read at DATA.
7. Set $\overline{OE}$ to “1”.

30.7.7 Reading the EEPROM

The algorithm for reading the EEPROM memory is as follows (refer to “Programming the Flash” on page 331 for details on Command and Address loading):

1. A: Load Command “0000 0011”.
2. G: Load Address High Byte (0x00 - 0xFF).
3. B: Load Address Low Byte (0x00 - 0xFF).
4. Set $\overline{OE}$ to “0”, and BS1 to “0”. The EEPROM Data byte can now be read at DATA.
5. Set $\overline{OE}$ to “1”.

30.7.8 Programming the Fuse Low Bits

The algorithm for programming the Fuse Low bits is as follows (refer to “Programming the Flash” on page 331 for details on Command and Data loading):

1. A: Load Command “0100 0000”.
2. C: Load Data Low Byte. Bit n = “0” programs and bit n = “1” erases the Fuse bit.
3. Give $\overline{WR}$ a negative pulse and wait for RDY/$\overline{BSY}$ to go high.

30.7.9 Programming the Fuse High Bits

The algorithm for programming the Fuse High bits is as follows (refer to “Programming the Flash” on page 331 for details on Command and Data loading):

1. A: Load Command “0100 0000”.
2. C: Load Data Low Byte. Bit n = “0” programs and bit n = “1” erases the Fuse bit.
3. Set BS2, BS1 to “01”. This selects high data byte.
4. Give $\overline{WR}$ a negative pulse and wait for RDY/$\overline{BSY}$ to go high.
5. Set BS2, BS1 to “00”. This selects low data byte.

30.7.10 Programming the Extended Fuse Bits

The algorithm for programming the Extended Fuse bits is as follows (refer to “Programming the Flash” on page 331 for details on Command and Data loading):

1. 1. A: Load Command “0100 0000”.
2. 2. C: Load Data Low Byte. Bit n = “0” programs and bit n = “1” erases the Fuse bit.
3. 3. Set BS2, BS1 to “10”. This selects extended data byte.
4. 4. Give $\overline{WR}$ a negative pulse and wait for RDY/$\overline{BSY}$ to go high.
5. 5. Set BS2, BS1 to “00”. This selects low data byte.

Figure 30-5. Programming the FUSES Waveforms

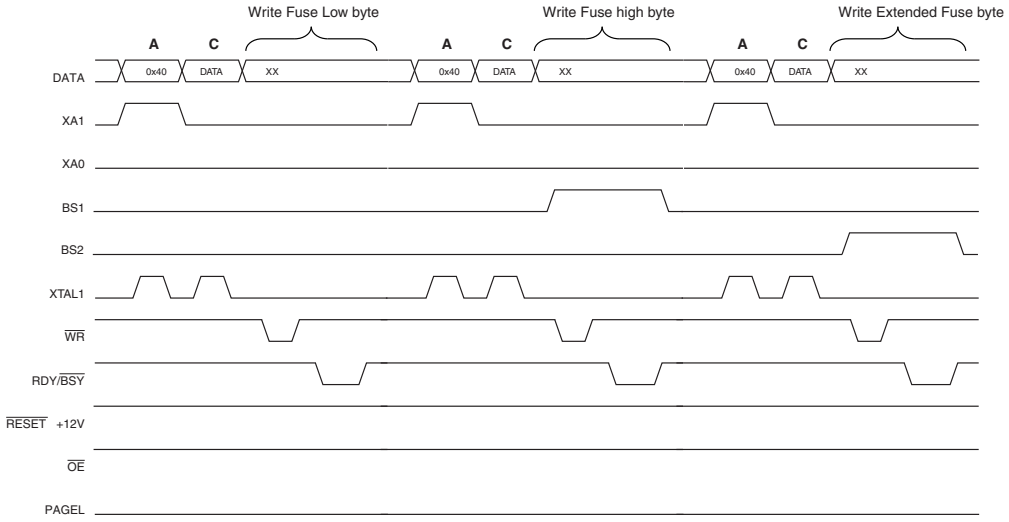

30.7.11 Programming the Lock Bits

The algorithm for programming the Lock bits is as follows (refer to “Programming the Flash” on page 331 for details on Command and Data loading):

1. A: Load Command “0010 0000”.
2. C: Load Data Low Byte. Bit n = “0” programs the Lock bit. If LB mode 3 is programmed (LB1 and LB2 is programmed), it is not possible to program the Boot Lock bits by any External Programming mode.
3. Give $\overline{WR}$ a negative pulse and wait for RDY/$\overline{BSY}$ to go high.

The Lock bits can only be cleared by executing Chip Erase.

30.7.12 Reading the Fuse and Lock Bits

The algorithm for reading the Fuse and Lock bits is as follows (refer to "Programming the Flash" on page 331 for details on Command loading):

1. A: Load Command "0000 0100".
2. Set $\overline{OE}$ to "0", and BS2, BS1 to "00". The status of the Fuse Low bits can now be read at DATA ("0" means programmed).
3. Set $\overline{OE}$ to "0", and BS2, BS1 to "11". The status of the Fuse High bits can now be read at DATA ("0" means programmed).
4. Set OE to "0", and BS2, BS1 to "10". The status of the Extended Fuse bits can now be read at DATA ("0" means programmed).
5. Set $\overline{OE}$ to "0", and BS2, BS1 to "01". The status of the Lock bits can now be read at DATA ("0" means programmed).
6. Set $\overline{OE}$ to "1".

Figure 30-6. Mapping Between BS1, BS2 and the Fuse and Lock Bits During Read

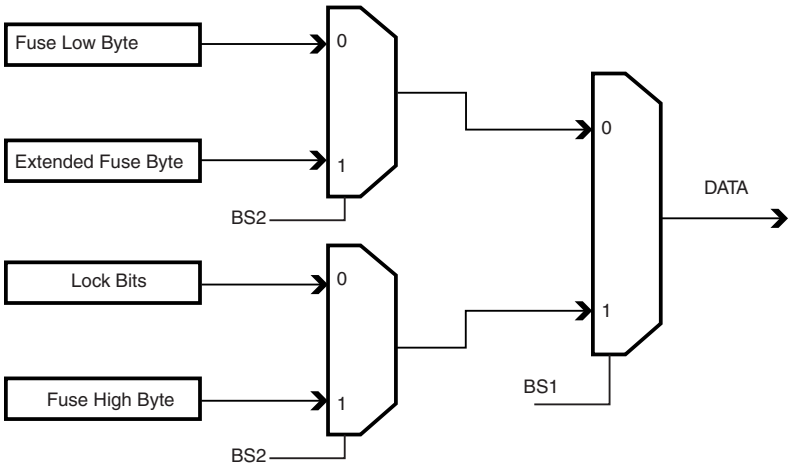

30.7.13 Reading the Signature Bytes

The algorithm for reading the Signature bytes is as follows (refer to "Programming the Flash" on page 331 for details on Command and Address loading):

1. A: Load Command "0000 1000".
2. B: Load Address Low Byte (0x00 - 0x02).
3. Set $\overline{OE}$ to "0", and BS to "0". The selected Signature byte can now be read at DATA.
4. Set $\overline{OE}$ to "1".

30.7.14 Reading the Calibration Byte

The algorithm for reading the Calibration byte is as follows (refer to "Programming the Flash" on page 331 for details on Command and Address loading):

1. A: Load Command "0000 1000".
2. B: Load Address Low Byte, 0x00.
3. Set $\overline{OE}$ to "0", and BS1 to "1". The Calibration byte can now be read at DATA.
4. Set $\overline{OE}$ to "1".

30.7.15 Parallel Programming Characteristics

Figure 30-7. Parallel Programming Timing, Including some General Timing Requirements

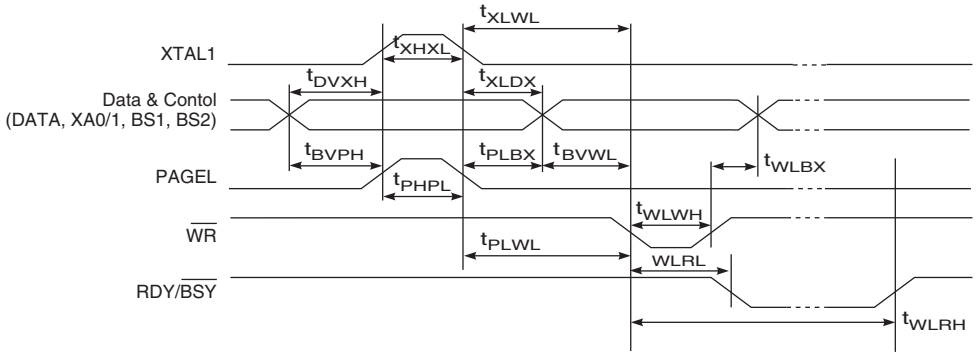

Figure 30-8. Parallel Programming Timing, Loading Sequence with Timing Requirements[1]

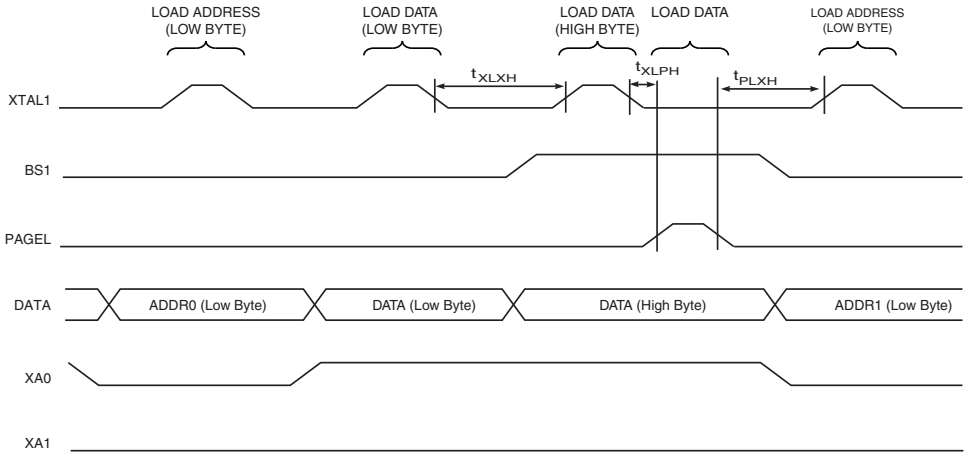

Note: 1. The timing requirements shown in Figure 30-7 (that is, t_{DVXH}, t_{XHXL}, and t_{XLDX}) also apply to loading operation.

Figure 30-9. Parallel Programming Timing, Reading Sequence (within the Same Page) with Timing Requirements[1]

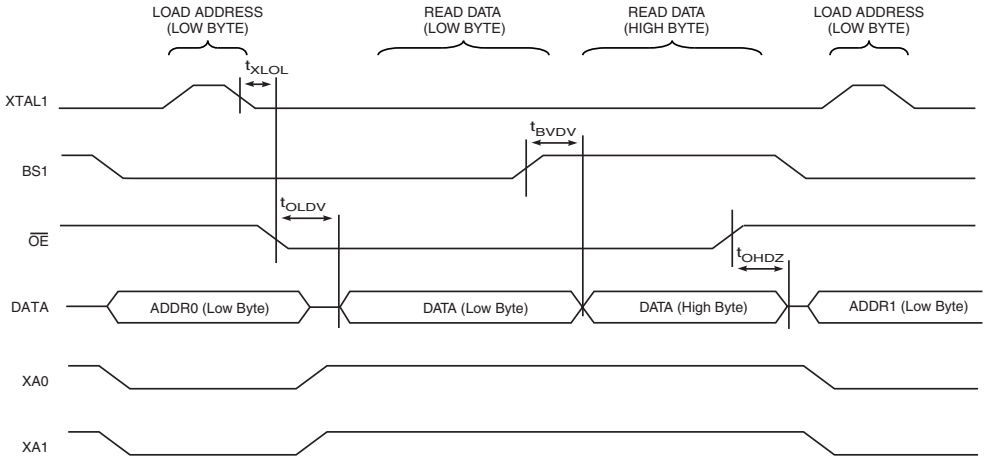

Note: 1. The timing requirements shown in Figure 30-7 (that is, t_{DVXH}, t_{XHXL}, and t_{XLDX}) also apply to reading operation.

Table 30-14. Parallel Programming Characteristics, V_{CC} = 5V ±10%

Symbol	Parameter	Min	Typ	Max	Units
V_{PP}	Programming Enable Voltage	11.5		12.5	V
I_{PP}	Programming Enable Current			250	µA
t_{DVXH}	Data and Control Valid before XTAL1 High	67			ns
t_{XLXH}	XTAL1 Low to XTAL1 High	200			
t_{XHXL}	XTAL1 Pulse Width High	150			
t_{XLDX}	Data and Control Hold after XTAL1 Low	67			
t_{XLWL}	XTAL1 Low to $\overline{WR}$ Low	0			
t_{XLPH}	XTAL1 Low to PAGEL high	0			
t_{PLXH}	PAGEL low to XTAL1 high	150			
t_{BVPH}	BS1 Valid before PAGEL High	67			
t_{PHPL}	PAGEL Pulse Width High	150			
t_{PLBX}	BS1 Hold after PAGEL Low	67			
t_{WLBX}	BS2/1 Hold after $\overline{WR}$ Low	67			
t_{PLWL}	PAGEL Low to $\overline{WR}$ Low	67			
t_{BVWL}	BS2/1 Valid to $\overline{WR}$ Low	67			
t_{WLWH}	$\overline{WR}$ Pulse Width Low	150			
t_{WLRL}	$\overline{WR}$ Low to RDY/$\overline{BSY}$ Low	0		1	µs
t_{WLRH}	$\overline{WR}$ Low to RDY/$\overline{BSY}$ High(1)	3.7		4.5	ms
t_{WLRH_CE}	$\overline{WR}$ Low to RDY/$\overline{BSY}$ High for Chip Erase(2)	7.5		9	
t_{XLOL}	XTAL1 Low to $\overline{OE}$ Low	0			ns
t_{BVDV}	BS1 Valid to DATA valid	0		250	
t_{OLDV}	$\overline{OE}$ Low to DATA Valid			250	
t_{OHDZ}	$\overline{OE}$ High to DATA Tri-stated			250	

Notes: 1. t_{WLRH} is valid for the Write Flash, Write EEPROM, Write Fuse bits and Write Lock bits commands.
2. t_{WLRH_CE} is valid for the Chip Erase command.

30.8 Serial Downloading

Both the Flash and EEPROM memory arrays can be programmed using a serial programming bus while $\overline{RESET}$ is pulled to GND. The serial programming interface consists of pins SCK, PDI (input) and PDO (output). After $\overline{RESET}$ is set low, the Programming Enable instruction needs to be executed first before program/erase operations can be executed. NOTE, in Table 30-15 on page 339, the pin mapping for serial programming is listed. Not all packages use the SPI pins dedicated for the internal Serial Peripheral Interface - SPI.

30.8.1 Serial Programming Pin Mapping

Table 30-15. Pin Mapping Serial Programming

Symbol	Pins (TQFP-100)	Pins (TQFP-64)	I/O	Description
PDI	PB2	PE0	I	Serial Data in
PDO	PB3	PE1	O	Serial Data out
SCK	PB1	PB1	I	Serial Clock

Figure 30-10. Serial Programming and Verify[(1)]

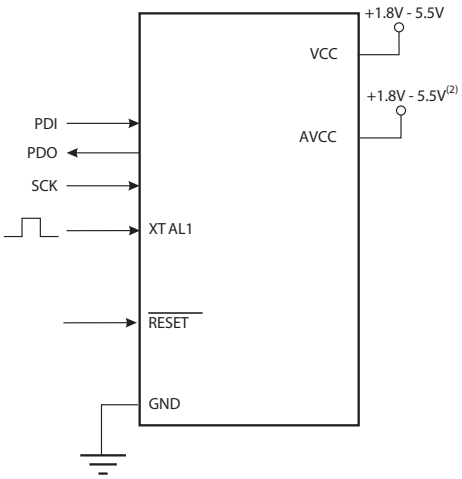

Notes: 1. If the device is clocked by the internal Oscillator, it is no need to connect a clock source to the XTAL1 pin.
2. V_{CC} - 0.3V < AVCC < V_{CC} + 0.3V, however, AVCC should always be within 1.8V - 5.5V.When programming the EEPROM, an auto-erase cycle is built into the self-timed programming operation (in the Serial mode ONLY) and there is no need to first execute the Chip Erase instruction. The Chip Erase operation turns the content of every memory location in both the Program and EEPROM arrays into 0xFF.

Depending on CKSEL Fuses, a valid clock must be present. The minimum low and high periods for the serial clock (SCK) input are defined as follows:

Low: > 2 CPU clock cycles for f_{ck} < 12MHz, 3 CPU clock cycles for f_{ck} >= 12MHz

High: > 2 CPU clock cycles for f_{ck} < 12MHz, 3 CPU clock cycles for f_{ck} >= 12MHz

30.8.2 Serial Programming Algorithm

When writing serial data to the ATmega640/1280/1281/2560/2561, data is clocked on the rising edge of SCK.

When reading data from the ATmega640/1280/1281/2560/2561, data is clocked on the falling edge of SCK. See Figure 30-12 on page 342 for timing details.

To program and verify the ATmega640/1280/1281/2560/2561 in the serial programming mode, the following sequence is recommended (see four byte instruction formats in Table 30-17 on page 340):

1. Power-up sequence:
   Apply power between V_{CC} and GND while $\overline{\text{RESET}}$ and SCK are set to “0”. In some systems, the programmer can not guarantee that SCK is held low during power-up. In this case, $\overline{\text{RESET}}$ must be given a positive pulse of at least two CPU clock cycles duration after SCK has been set to “0”.
2. Wait for at least 20ms and enable serial programming by sending the Programming Enable serial instruction to pin PDI.

3. The serial programming instructions will not work if the communication is out of synchronization. When in sync. the second byte (0x53), will echo back when issuing the third byte of the Programming Enable instruction. Whether the echo is correct or not, all four bytes of the instruction must be transmitted. If the 0x53 did not echo back, give $\overline{\text{RESET}}$ a positive pulse and issue a new Programming Enable command.
4. The Flash is programmed one page at a time. The memory page is loaded one byte at a time by supplying the 7 LSB of the address and data together with the Load Program Memory Page instruction. To ensure correct loading of the page, the data low byte must be loaded before data high byte is applied for a given address. The Program Memory Page is stored by loading the Write Program Memory Page instruction with the address lines 15:8. Before issuing this command, make sure the instruction Load Extended Address Byte has been used to define the MSB of the address. The extended address byte is stored until the command is re-issued, that is, the command needs only be issued for the first page, and when crossing the 64KWord boundary. If polling (RDY/$\overline{\text{BSY}}$) is not used, the user must wait at least t_{WD_FLASH} before issuing the next page (see Table 30-16). Accessing the serial programming interface before the Flash write operation completes can result in incorrect programming.
5. The EEPROM array is programmed one byte at a time by supplying the address and data together with the appropriate Write instruction. An EEPROM memory location is first automatically erased before new data is written. If polling is not used, the user must wait at least t_{WD_EEPROM} before issuing the next byte (see Table 30-16). In a chip erased device, no 0xFFs in the data file(s) need to be programmed.
6. Any memory location can be verified by using the Read instruction which returns the content at the selected address at serial output PDO. When reading the Flash memory, use the instruction Load Extended Address Byte to define the upper address byte, which is not included in the Read Program Memory instruction. The extended address byte is stored until the command is re-issued, that is, the command needs only be issued for the first page, and when crossing the 64KWord boundary.
7. At the end of the programming session, $\overline{\text{RESET}}$ can be set high to commence normal operation.
8. Power-off sequence (if needed):
   Set $\overline{\text{RESET}}$ to “1”.
   Turn V_{CC} power off.

Table 30-16. Minimum Wait Delay Before Writing the Next Flash or EEPROM Location

Symbol	Minimum Wait Delay
t_{WD_FLASH}	4.5ms
t_{WD_EEPROM}	3.6ms
t_{WD_ERASE}	9.0ms

30.8.3 Serial Programming Instruction set

Table 30-17 and Figure 30-11 on page 342 describes the Instruction set.

Table 30-17. Serial Programming Instruction Set

Instruction/Operation	Instruction Format			
	Byte 1	Byte 2	Byte 3	Byte 4
Programming Enable	$AC	$53	$00	$00
Chip Erase (Program Memory/EEPROM)	$AC	$80	$00	$00
Poll RDY/$\overline{\text{BSY}}$	$F0	$00	$00	data byte out
Load Instructions				
Load Extended Address byte(1)	$4D	$00	Extended adr	$00
Load Program Memory Page, High byte	$48	$00	adr LSB	high data byte in
Load Program Memory Page, Low byte	$40	$00	adr LSB	low data byte in

Table 30-17. Serial Programming Instruction Set (Continued)

Instruction/Operation	Instruction Format			
	Byte 1	**Byte 2**	**Byte 3**	**Byte 4**
Load EEPROM Memory Page (page access)	$C1	$00	0000 000aa	data byte in
Read Instructions				
Read Program Memory, High byte	$28	adr MSB	adr LSB	high data byte out
Read Program Memory, Low byte	$20	adr MSB	adr LSB	low data byte out
Read EEPROM Memory	$A0	0000 aaaa	aaaa aaaa	data byte out
Read Lock bits	$58	$00	$00	data byte out
Read Signature Byte	$30	$00	0000 000aa	data byte out
Read Fuse bits	$50	$00	$00	data byte out
Read Fuse High bits	$58	$08	$00	data byte out
Read Extended Fuse Bits	$50	$08	$00	data byte out
Read Calibration Byte	$38	$00	$00	data byte out
Write Instructions				
Write Program Memory Page	$4C	adr MSB	adr LSB	$00
Write EEPROM Memory	$C0	0000 aaaa	aaaa aaaa	data byte in
Write EEPROM Memory Page (page access)	$C2	0000 aaaa	aaaa 00	$00
Write Lock bits	$AC	$E0	$00	data byte in
Write Fuse bits	$AC	$A0	$00	data byte in
Write Fuse High bits	$AC	$A8	$00	data byte in
Write Extended Fuse Bits	$AC	$A4	$00	data byte in

Notes:
1. Not all instructions are applicable for all parts.
2. a = address.
3. Bits are programmed ‘0’, unprogrammed ‘1’.
4. To ensure future compatibility, unused Fuses and Lock bits should be unprogrammed (‘1’).
5. Refer to the corresponding section for Fuse and Lock bits, Calibration and Signature bytes and Page size.
6. See http://www.atmel.com/avr for Application Notes regarding programming and programmers.

If the LSB in RDY/BSY data byte out is ‘1’, a programming operation is still pending. Wait until this bit returns ‘0’ before the next instruction is carried out.

Within the same page, the low data byte must be loaded prior to the high data byte.

After data is loaded to the page buffer, program the EEPROM page, see Figure 30-11 on page 342.

Figure 30-11. Serial Programming Instruction example

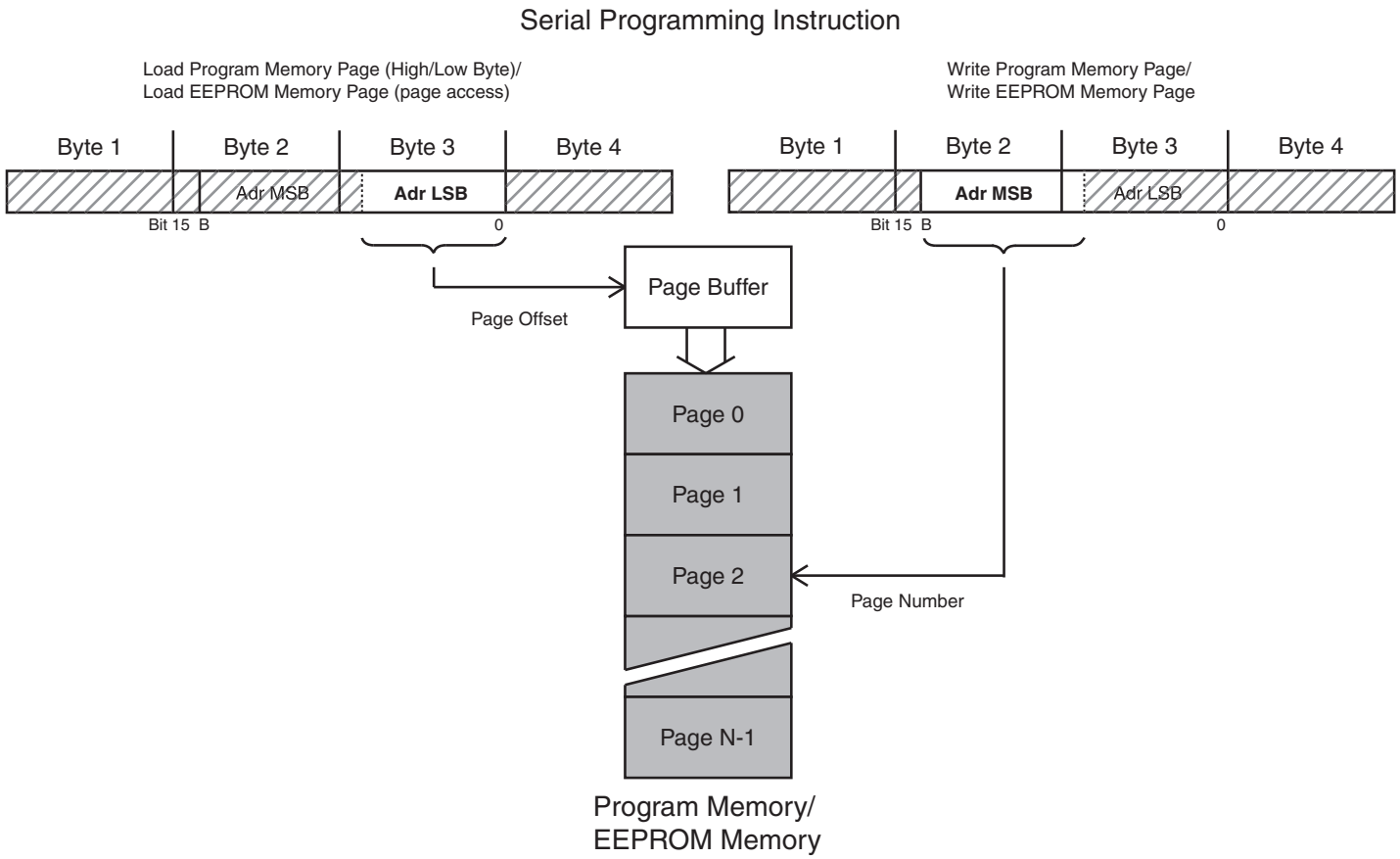

30.8.4 Serial Programming Characteristics

For characteristics of the Serial Programming module, see "SPI Timing Characteristics" on page 363.

Figure 30-12. Serial Programming Waveforms

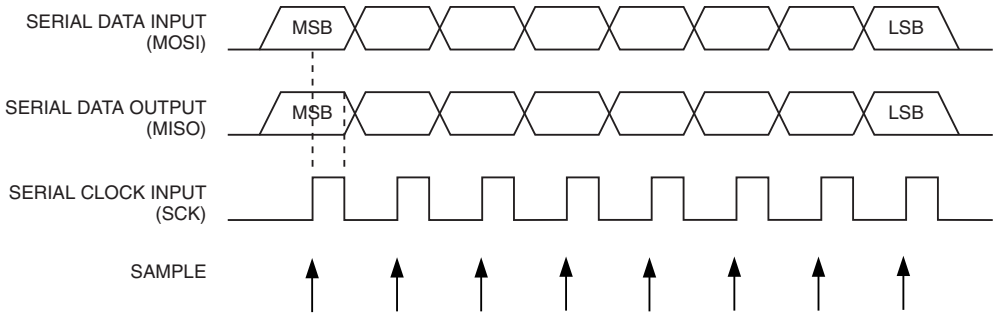

30.9 Programming via the JTAG Interface

Programming through the JTAG interface requires control of the four JTAG specific pins: TCK, TMS, TDI, and TDO. Control of the reset and clock pins is not required.

To be able to use the JTAG interface, the JTAGEN Fuse must be programmed. The device is default shipped with the fuse programmed. In addition, the JTD bit in MCUCR must be cleared. Alternatively, if the JTD bit is set, the external reset can be forced low. Then, the JTD bit will be cleared after two chip clocks, and the JTAG pins are available for programming. This provides a means of using the JTAG pins as normal port pins in Running mode

while still allowing In-System Programming via the JTAG interface. Note that this technique can not be used when using the JTAG pins for Boundary-scan or On-chip Debug. In these cases the JTAG pins must be dedicated for this purpose.

During programming the clock frequency of the TCK Input must be less than the maximum frequency of the chip. The System Clock Prescaler can not be used to divide the TCK Clock Input into a sufficiently low frequency.

As a definition in this datasheet, the LSB is shifted in and out first of all Shift Registers.

30.9.1 Programming Specific JTAG Instructions

The Instruction Register is 4-bit wide, supporting up to 16 instructions. The JTAG instructions useful for programming are listed below.

The OPCODE for each instruction is shown behind the instruction name in hex format. The text describes which Data Register is selected as path between TDI and TDO for each instruction.

The Run-Test/Idle state of the TAP controller is used to generate internal clocks. It can also be used as an idle state between JTAG sequences. The state machine sequence for changing the instruction word is shown in Figure 30-13.

Figure 30-13. State Machine Sequence for Changing the Instruction Word

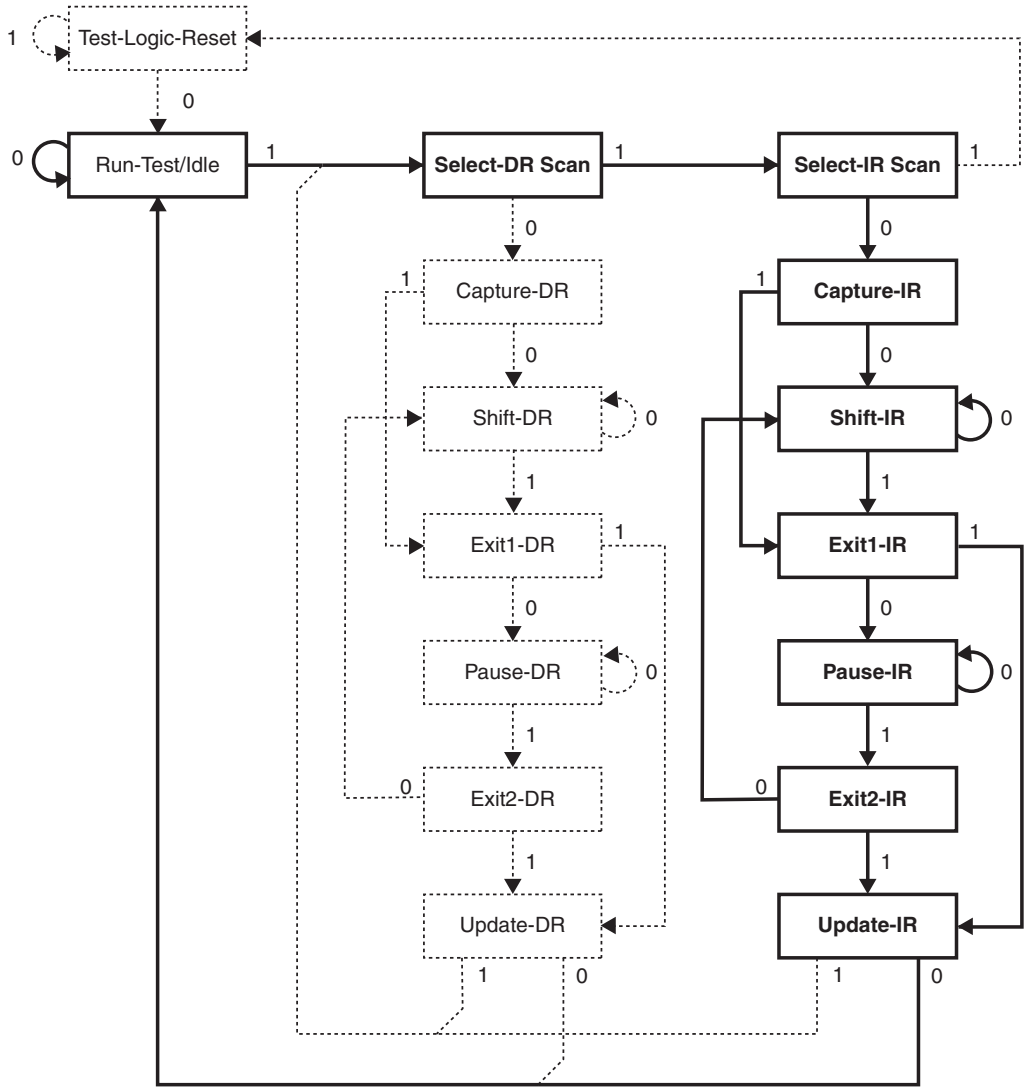

30.9.2 AVR_RESET (0xC)

The AVR specific public JTAG instruction for setting the AVR device in the Reset mode or taking the device out from the Reset mode. The TAP controller is not reset by this instruction. The one bit Reset Register is selected as Data Register. Note that the reset will be active as long as there is a logic “one” in the Reset Chain. The output from this chain is not latched.

The active states are:

- **Shift-DR**: The Reset Register is shifted by the TCK input

30.9.3 PROG_ENABLE (0x4)

The AVR specific public JTAG instruction for enabling programming via the JTAG port. The 16-bit Programming Enable Register is selected as Data Register. The active states are the following:

- **Shift-DR**: The programming enable signature is shifted into the Data Register
- **Update-DR**: The programming enable signature is compared to the correct value, and Programming mode is entered if the signature is valid

30.9.4 PROG_COMMANDS (0x5)

The AVR specific public JTAG instruction for entering programming commands via the JTAG port. The 15-bit Programming Command Register is selected as Data Register. The active states are the following:

- **Capture-DR**: The result of the previous command is loaded into the Data Register
- **Shift-DR**: The Data Register is shifted by the TCK input, shifting out the result of the previous command and shifting in the new command
- **Update-DR**: The programming command is applied to the Flash inputs
- **Run-Test/Idle**: One clock cycle is generated, executing the applied command

30.9.5 PROG_PAGELOAD (0x6)

The AVR specific public JTAG instruction to directly load the Flash data page via the JTAG port. An 8-bit Flash Data Byte Register is selected as the Data Register. This is physically the 8 LSBs of the Programming Command Register. The active states are the following:

- **Shift-DR**: The Flash Data Byte Register is shifted by the TCK input.
- **Update-DR**: The content of the Flash Data Byte Register is copied into a temporary register. A write sequence is initiated that within 11 TCK cycles loads the content of the temporary register into the Flash page buffer. The AVR automatically alternates between writing the low and the high byte for each new Update-DR state, starting with the low byte for the first Update-DR encountered after entering the PROG_PAGELOAD command. The Program Counter is pre-incremented before writing the low byte, except for the first written byte. This ensures that the first data is written to the address set up by PROG_COMMANDS, and loading the last location in the page buffer does not make the program counter increment into the next page.

30.9.6 PROG_PAGEREAD (0x7)

The AVR specific public JTAG instruction to directly capture the Flash content via the JTAG port. An 8-bit Flash Data Byte Register is selected as the Data Register. This is physically the 8 LSBs of the Programming Command Register. The active states are the following:

- **Capture-DR**: The content of the selected Flash byte is captured into the Flash Data Byte Register. The AVR automatically alternates between reading the low and the high byte for each new Capture-DR state, starting with the low byte for the first Capture-DR encountered after entering the PROG_PAGEREAD command. The Program Counter is post-incremented after reading each high byte, including the first read byte. This ensures that the first data is captured from the first address set up by PROG_COMMANDS, and reading the last location in the page makes the program counter increment into the next page.
- **Shift-DR**: The Flash Data Byte Register is shifted by the TCK input.

30.9.7 Data Registers

The Data Registers are selected by the JTAG instruction registers described in section "Programming Specific JTAG Instructions" on page 343. The Data Registers relevant for programming operations are:

- Reset Register
- Programming Enable Register
- Programming Command Register
- Flash Data Byte Register

30.9.8 Reset Register

The Reset Register is a Test Data Register used to reset the part during programming. It is required to reset the part before entering Programming mode.

A high value in the Reset Register corresponds to pulling the external reset low. The part is reset as long as there is a high value present in the Reset Register. Depending on the Fuse settings for the clock options, the part will remain reset for a Reset Time-out period (refer to "Clock Sources" on page 40) after releasing the Reset Register. The output from this Data Register is not latched, so the reset will take place immediately, as shown in Figure 28-2 on page 297.

30.9.9 Programming Enable Register

The Programming Enable Register is a 16-bit register. The contents of this register is compared to the programming enable signature, binary code 0b1010_0011_0111_0000. When the contents of the register is equal to the programming enable signature, programming via the JTAG port is enabled. The register is reset to 0 on Power-on Reset, and should always be reset when leaving Programming mode.

Figure 30-14. Programming Enable Register

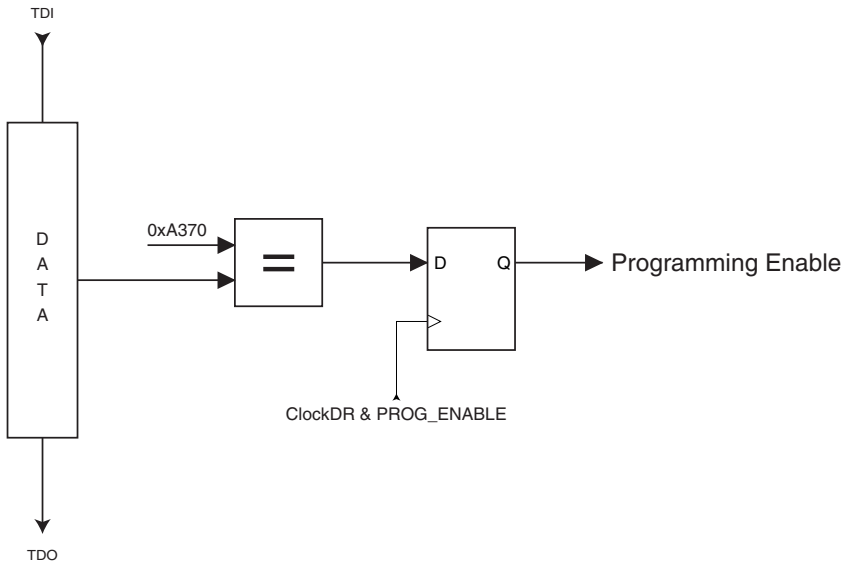

30.9.10 Programming Command Register

The Programming Command Register is a 15-bit register. This register is used to serially shift in programming commands, and to serially shift out the result of the previous command, if any. The JTAG Programming Instruction Set is shown in Table 30-18 on page 347. The state sequence when shifting in the programming commands is illustrated in Figure 30-16 on page 350.

Figure 30-15. Programming Command Register

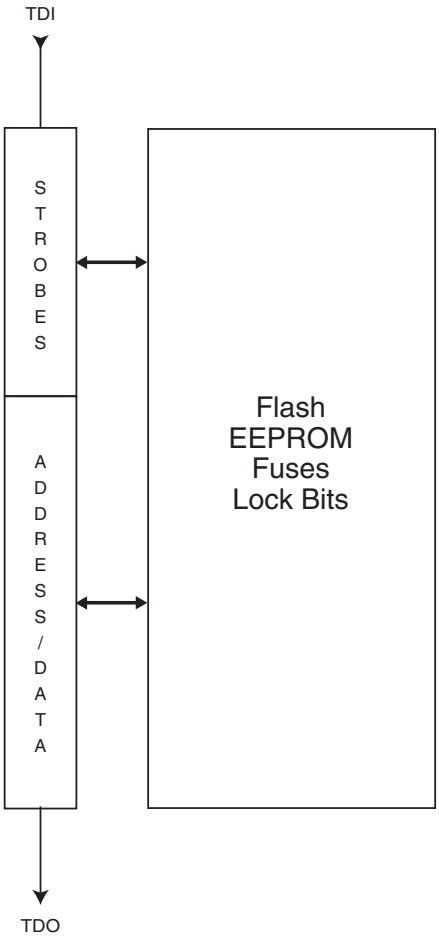

Table 30-18. JTAG Programming Instruction Set **a** = address high bits, **b** = address low bits, **c** = address extended bits, **H** = 0 - Low byte, 1 - High Byte, **o** = data out, **i** = data in, x = don't care

Instruction	TDI Sequence	TDO Sequence	Notes
1a. Chip Erase	0100011_10000000 0110001_10000000 0110011_10000000 0110011_10000000	xxxxxxx_xxxxxxxx xxxxxxx_xxxxxxxx xxxxxxx_xxxxxxxx xxxxxxx_xxxxxxxx	
1b. Poll for Chip Erase Complete	0110011_10000000	xxxxx**o**x_xxxxxxxx	(2)
2a. Enter Flash Write	0100011_00010000	xxxxxxx_xxxxxxxx	
2b. Load Address Extended High Byte	0001011_**cccccccc**	xxxxxxx_xxxxxxxx	(10)
2c. Load Address High Byte	0000111_**aaaaaaaa**	xxxxxxx_xxxxxxxx	
2d. Load Address Low Byte	0000011_**bbbbbbbb**	xxxxxxx_xxxxxxxx	
2e. Load Data Low Byte	0010011_**iiiiiiii**	xxxxxxx_xxxxxxxx	
2f. Load Data High Byte	0010111_**iiiiiiii**	xxxxxxx_xxxxxxxx	
2g. Latch Data	0110111_00000000 1110111_00000000 0110111_00000000	xxxxxxx_xxxxxxxx xxxxxxx_xxxxxxxx xxxxxxx_xxxxxxxx	(1)
2h. Write Flash Page	0110111_00000000 0110101_00000000 0110111_00000000 0110111_00000000	xxxxxxx_xxxxxxxx xxxxxxx_xxxxxxxx xxxxxxx_xxxxxxxx xxxxxxx_xxxxxxxx	(1)
2i. Poll for Page Write Complete	0110111_00000000	xxxxx**o**x_xxxxxxxx	(2)
3a. Enter Flash Read	0100011_00000010	xxxxxxx_xxxxxxxx	
3b. Load Address Extended High Byte	0001011_**cccccccc**	xxxxxxx_xxxxxxxx	(10)
3c. Load Address High Byte	0000111_**aaaaaaaa**	xxxxxxx_xxxxxxxx	
3d. Load Address Low Byte	0000011_**bbbbbbbb**	xxxxxxx_xxxxxxxx	
3e. Read Data Low and High Byte	0110010_00000000 0110110_00000000 0110111_00000000	xxxxxxx_xxxxxxxx xxxxxxx_**oooooooo** xxxxxxx_**oooooooo**	 Low byte High byte
4a. Enter EEPROM Write	0100011_00010001	xxxxxxx_xxxxxxxx	
4b. Load Address High Byte	0000111_**aaaaaaaa**	xxxxxxx_xxxxxxxx	(10)
4c. Load Address Low Byte	0000011_**bbbbbbbb**	xxxxxxx_xxxxxxxx	
4d. Load Data Byte	0010011_**iiiiiiii**	xxxxxxx_xxxxxxxx	
4e. Latch Data	0110111_00000000 1110111_00000000 0110111_00000000	xxxxxxx_xxxxxxxx xxxxxxx_xxxxxxxx xxxxxxx_xxxxxxxx	(1)
4f. Write EEPROM Page	0110011_00000000 0110001_00000000 0110011_00000000 0110011_00000000	xxxxxxx_xxxxxxxx xxxxxxx_xxxxxxxx xxxxxxx_xxxxxxxx xxxxxxx_xxxxxxxx	(1)
4g. Poll for Page Write Complete	0110011_00000000	xxxxx**o**x_xxxxxxxx	(2)

Table 30-18. JTAG Programming Instruction (Continued)
Set (Continued) **a** = address high bits, **b** = address low bits, **c** = address extended bits, **H** = 0 - Low byte, 1 - High Byte, **o** = data out, **i** = data in, x = don't care

Instruction	TDI Sequence	TDO Sequence	Notes
5a. Enter EEPROM Read	0100011_00000011	xxxxxxx_xxxxxxxx	
5b. Load Address High Byte	0000111_**aaaaaaaa**	xxxxxxx_xxxxxxxx	(10)
5c. Load Address Low Byte	0000011_**bbbbbbbb**	xxxxxxx_xxxxxxxx	
5d. Read Data Byte	0110011_**bbbbbbbb** 0110010_00000000 0110011_00000000	xxxxxxx_xxxxxxxx xxxxxxx_xxxxxxxx xxxxxxx_**oooooooo**	
6a. Enter Fuse Write	0100011_01000000	xxxxxxx_xxxxxxxx	
6b. Load Data Low Byte[6]	0010011_**iiiiiiii**	xxxxxxx_xxxxxxxx	(3)
6c. Write Fuse Extended Byte	0111011_00000000 0111001_00000000 0111011_00000000 0111011_00000000	xxxxxxx_xxxxxxxx xxxxxxx_xxxxxxxx xxxxxxx_xxxxxxxx xxxxxxx_xxxxxxxx	(1)
6d. Poll for Fuse Write Complete	0110111_00000000	xxxxx**o**x_xxxxxxxx	(2)
6e. Load Data Low Byte[7]	0010011_**iiiiiiii**	xxxxxxx_xxxxxxxx	(3)
6f. Write Fuse High Byte	0110111_00000000 0110101_00000000 0110111_00000000 0110111_00000000	xxxxxxx_xxxxxxxx xxxxxxx_xxxxxxxx xxxxxxx_xxxxxxxx xxxxxxx_xxxxxxxx	(1)
6g. Poll for Fuse Write Complete	0110111_00000000	xxxxx**o**x_xxxxxxxx	(2)
6h. Load Data Low Byte[7]	0010011_**iiiiiiii**	xxxxxxx_xxxxxxxx	(3)
6i. Write Fuse Low Byte	0110011_00000000 0110001_00000000 0110011_00000000 0110011_00000000	xxxxxxx_xxxxxxxx xxxxxxx_xxxxxxxx xxxxxxx_xxxxxxxx xxxxxxx_xxxxxxxx	(1)
6j. Poll for Fuse Write Complete	0110011_00000000	xxxxx**o**x_xxxxxxxx	(2)
7a. Enter Lock Bit Write	0100011_00100000	xxxxxxx_xxxxxxxx	
7b. Load Data Byte[9]	0010011_11**iiiiii**	xxxxxxx_xxxxxxxx	(4)
7c. Write Lock Bits	0110011_00000000 0110001_00000000 0110011_00000000 0110011_00000000	xxxxxxx_xxxxxxxx xxxxxxx_xxxxxxxx xxxxxxx_xxxxxxxx xxxxxxx_xxxxxxxx	(1)
7d. Poll for Lock Bit Write complete	0110011_00000000	xxxxx**o**x_xxxxxxxx	(2)
8a. Enter Fuse/Lock Bit Read	0100011_00000100	xxxxxxx_xxxxxxxx	
8b. Read Extended Fuse Byte[6]	0111010_00000000 0111011_00000000	xxxxxxx_xxxxxxxx xxxxxxx_**oooooooo**	
8c. Read Fuse High Byte[7]	0111110_00000000 0111111_00000000	xxxxxxx_xxxxxxxx xxxxxxx_**oooooooo**	
8d. Read Fuse Low Byte[8]	0110010_00000000 0110011_00000000	xxxxxxx_xxxxxxxx xxxxxxx_**oooooooo**	

Table 30-18. JTAG Programming Instruction (Continued)
Set (Continued) **a** = address high bits, **b** = address low bits, **c** = address extended bits, **H** = 0 - Low byte, 1 - High Byte, **o** = data out, **i** = data in, x = don't care

Instruction	TDI Sequence	TDO Sequence	Notes
8e. Read Lock Bits[9]	0110110_00000000 0110111_00000000	xxxxxxx_xxxxxxxx xxxxxxx_xx**oooooo**	(5)
8f. Read Fuses and Lock Bits	0111010_00000000 0111110_00000000 0110010_00000000 0110110_00000000 0110111_00000000	xxxxxxx_xxxxxxxx xxxxxxx_**oooooooo** xxxxxxx_**oooooooo** xxxxxxx_**oooooooo** xxxxxxx_**oooooooo**	(5) Fuse Ext. byte Fuse High byte Fuse Low byte Lock bits
9a. Enter Signature Byte Read	0100011_00001000	xxxxxxx_xxxxxxxx	
9b. Load Address Byte	0000011_**bbbbbbbb**	xxxxxxx_xxxxxxxx	
9c. Read Signature Byte	0110010_00000000 0110011_00000000	xxxxxxx_xxxxxxxx xxxxxxx_**oooooooo**	
10a. Enter Calibration Byte Read	0100011_00001000	xxxxxxx_xxxxxxxx	
10b. Load Address Byte	0000011_**bbbbbbbb**	xxxxxxx_xxxxxxxx	
10c. Read Calibration Byte	0110110_00000000 0110111_00000000	xxxxxxx_xxxxxxxx xxxxxxx_**oooooooo**	
11a. Load No Operation Command	0100011_00000000 0110011_00000000	xxxxxxx_xxxxxxxx xxxxxxx_xxxxxxxx	

Notes:
1. This command sequence is not required if the seven MSB are correctly set by the previous command sequence (which is normally the case).
2. Repeat until **o** = "1".
3. Set bits to "0" to program the corresponding Fuse, "1" to unprogram the Fuse.
4. Set bits to "0" to program the corresponding Lock bit, "1" to leave the Lock bit unchanged.
5. "0" = programmed, "1" = unprogrammed.
6. The bit mapping for Fuses Extended byte is listed in Table 30-3 on page 326.
7. The bit mapping for Fuses High byte is listed in Table 30-4 on page 327.
8. The bit mapping for Fuses Low byte is listed in Table 30-5 on page 327.
9. The bit mapping for Lock bits byte is listed in Table 30-1 on page 325.
10. Address bits exceeding PCMSB and EEAMSB (Table 30-7 and Table 30-8 on page 328) are don't care.
11. All TDI and TDO sequences are represented by binary digits (0b...).

Figure 30-16. State Machine Sequence for Changing/Reading the Data Word

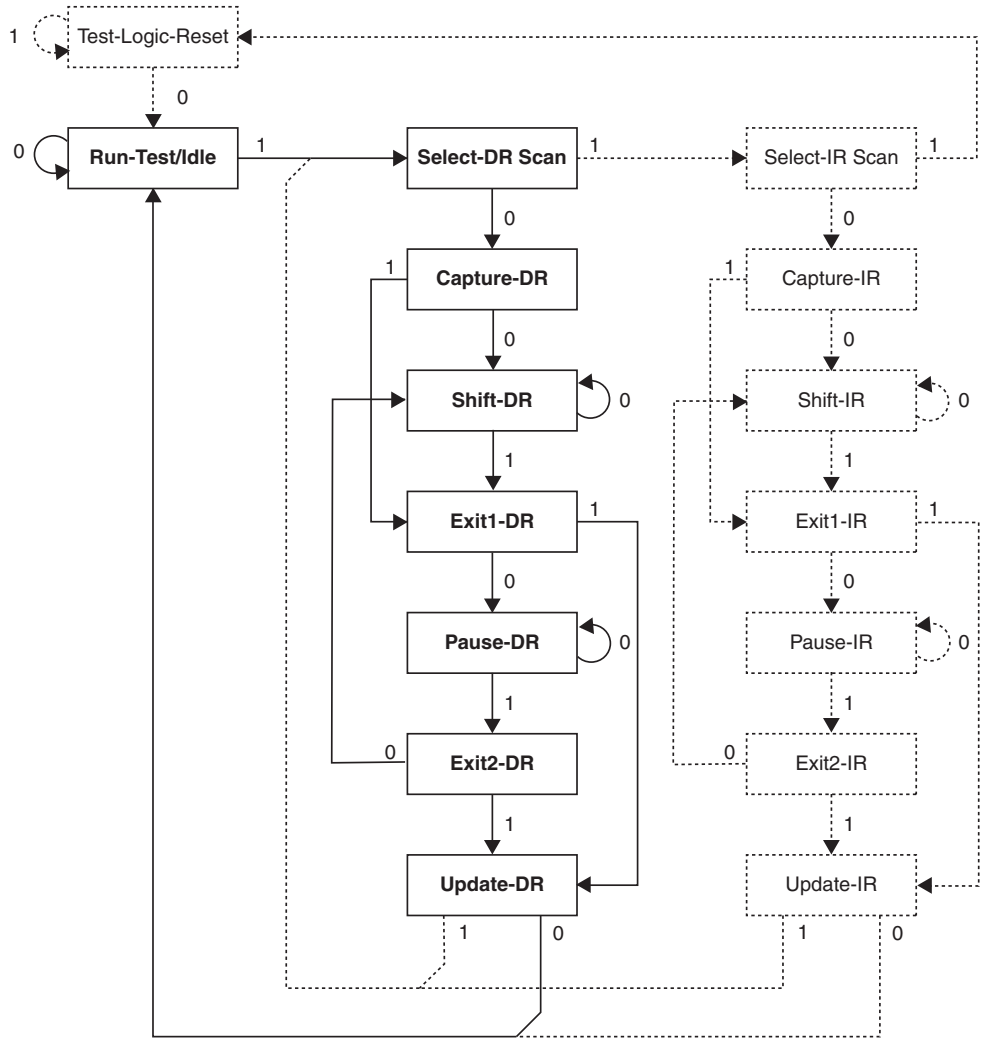

30.9.11 Flash Data Byte Register

The Flash Data Byte Register provides an efficient way to load the entire Flash page buffer before executing Page Write, or to read out/verify the content of the Flash. A state machine sets up the control signals to the Flash and senses the strobe signals from the Flash, thus only the data words need to be shifted in/out.

The Flash Data Byte Register actually consists of the 8-bit scan chain and a 8-bit temporary register. During page load, the Update-DR state copies the content of the scan chain over to the temporary register and initiates a write sequence that within 11 TCK cycles loads the content of the temporary register into the Flash page buffer. The AVR automatically alternates between writing the low and the high byte for each new Update-DR state, starting with the low byte for the first Update-DR encountered after entering the PROG_PAGELOAD command. The Program Counter is pre-incremented before writing the low byte, except for the first written byte. This ensures that the first data is written to the address set up by PROG_COMMANDS, and loading the last location in the page buffer does not make the Program Counter increment into the next page.

During Page Read, the content of the selected Flash byte is captured into the Flash Data Byte Register during the Capture-DR state. The AVR automatically alternates between reading the low and the high byte for each new Capture-DR state, starting with the low byte for the first Capture-DR encountered after entering the PROG_PAGEREAD command. The Program Counter is post-incremented after reading each high byte, including the first read byte. This ensures that the first data is captured from the first address set up by PROG_COMMANDS, and reading the last location in the page makes the program counter increment into the next page.

Figure 30-17. Flash Data Byte Register

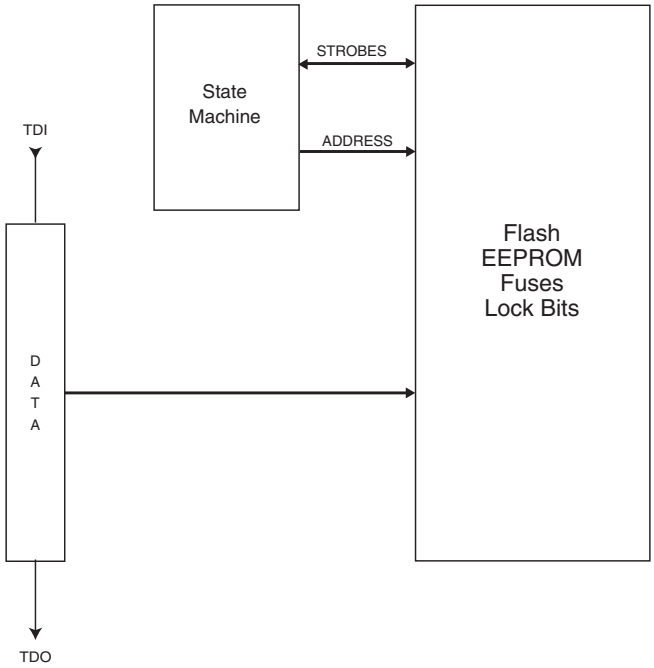

The state machine controlling the Flash Data Byte Register is clocked by TCK. During normal operation in which eight bits are shifted for each Flash byte, the clock cycles needed to navigate through the TAP controller automatically feeds the state machine for the Flash Data Byte Register with sufficient number of clock pulses to complete its operation transparently for the user. However, if too few bits are shifted between each Update-DR state during page load, the TAP controller should stay in the Run-Test/Idle state for some TCK cycles to ensure that there are at least 11 TCK cycles between each Update-DR state.

30.9.12 Programming Algorithm

All references below of type “1a”, “1b”, and so on, refer to Table 30-18 on page 347.

30.9.13 Entering Programming Mode

1. Enter JTAG instruction AVR_RESET and shift 1 in the Reset Register.
2. Enter instruction PROG_ENABLE and shift 0b1010_0011_0111_0000 in the Programming Enable Register.

30.9.14 Leaving Programming Mode

1. Enter JTAG instruction PROG_COMMANDS.
2. Disable all programming instructions by using no operation instruction 11a.
3. Enter instruction PROG_ENABLE and shift 0b0000_0000_0000_0000 in the programming Enable Register.
4. Enter JTAG instruction AVR_RESET and shift 0 in the Reset Register.

30.9.15 Performing Chip Erase

1. Enter JTAG instruction PROG_COMMANDS.
2. Start Chip Erase using programming instruction 1a.
3. Poll for Chip Erase complete using programming instruction 1b, or wait for t_{WLRH_CE} (refer to Table 30-14 on page 338).

30.9.16 Programming the Flash

Before programming the Flash a Chip Erase must be performed, see “Performing Chip Erase” on page 351.

1. Enter JTAG instruction PROG_COMMANDS.
2. Enable Flash write using programming instruction 2a.
3. Load address Extended High byte using programming instruction 2b.
4. Load address High byte using programming instruction 2c.
5. Load address Low byte using programming instruction 2d.
6. Load data using programming instructions 2e, 2f and 2g.
7. Repeat steps 5 and 6 for all instruction words in the page.
8. Write the page using programming instruction 2h.
9. Poll for Flash write complete using programming instruction 2i, or wait for t_{WLRH} (refer to Table 30-14 on page 338).
10. Repeat steps 3 to 9 until all data have been programmed.

A more efficient data transfer can be achieved using the PROG_PAGELOAD instruction:

1. Enter JTAG instruction PROG_COMMANDS.
2. Enable Flash write using programming instruction 2a.
3. Load the page address using programming instructions 2b, 2c and 2d. PCWORD (refer to Table 30-7 on page 328) is used to address within one page and must be written as 0.
4. Enter JTAG instruction PROG_PAGELOAD.
5. Load the entire page by shifting in all instruction words in the page byte-by-byte, starting with the LSB of the first instruction in the page and ending with the MSB of the last instruction in the page. Use Update-DR to copy the contents of the Flash Data Byte Register into the Flash page location and to auto-increment the Program Counter before each new word.
6. Enter JTAG instruction PROG_COMMANDS.
7. Write the page using programming instruction 2h.
8. Poll for Flash write complete using programming instruction 2i, or wait for t_{WLRH} (refer to Table 30-14 on page 338).
9. Repeat steps 3 to 8 until all data have been programmed.

30.9.17 Reading the Flash

1. Enter JTAG instruction PROG_COMMANDS.
2. Enable Flash read using programming instruction 3a.
3. Load address using programming instructions 3b, 3c and 3d.
4. Read data using programming instruction 3e.
5. Repeat steps 3 and 4 until all data have been read.

A more efficient data transfer can be achieved using the PROG_PAGEREAD instruction:

1. Enter JTAG instruction PROG_COMMANDS.
2. Enable Flash read using programming instruction 3a.
3. Load the page address using programming instructions 3b, 3c and 3d. PCWORD (refer to Table 30-7 on page 328) is used to address within one page and must be written as 0.
4. Enter JTAG instruction PROG_PAGEREAD.
5. Read the entire page (or Flash) by shifting out all instruction words in the page (or Flash), starting with the LSB of the first instruction in the page (Flash) and ending with the MSB of the last instruction in the page (Flash). The Capture-DR state both captures the data from the Flash, and also auto-increments the program counter after each word is read. Note that Capture-DR comes before the shift-DR state. Hence, the first byte which is shifted out contains valid data.

6. Enter JTAG instruction PROG_COMMANDS.
7. Repeat steps 3 to 6 until all data have been read.

30.9.18 Programming the EEPROM

Before programming the EEPROM a Chip Erase must be performed, see “Performing Chip Erase” on page 351.

1. Enter JTAG instruction PROG_COMMANDS.
2. Enable EEPROM write using programming instruction 4a.
3. Load address High byte using programming instruction 4b.
4. Load address Low byte using programming instruction 4c.
5. Load data using programming instructions 4d and 4e.
6. Repeat steps 4 and 5 for all data bytes in the page.
7. Write the data using programming instruction 4f.
8. Poll for EEPROM write complete using programming instruction 4g, or wait for t_{WLRH} (refer to Table 30-14 on page 338).
9. Repeat steps 3 to 8 until all data have been programmed.

Note that the PROG_PAGELOAD instruction can not be used when programming the EEPROM.

30.9.19 Reading the EEPROM

1. Enter JTAG instruction PROG_COMMANDS.
2. Enable EEPROM read using programming instruction 5a.
3. Load address using programming instructions 5b and 5c.
4. Read data using programming instruction 5d.
5. Repeat steps 3 and 4 until all data have been read.

Note that the PROG_PAGEREAD instruction can not be used when reading the EEPROM.

30.9.20 Programming the Fuses

1. Enter JTAG instruction PROG_COMMANDS.
2. Enable Fuse write using programming instruction 6a.
3. Load data high byte using programming instructions 6b. A bit value of “0” will program the corresponding fuse, a “1” will unprogram the fuse.
4. Write Fuse High byte using programming instruction 6c.
5. Poll for Fuse write complete using programming instruction 6d, or wait for t_{WLRH} (refer to Table 30-14 on page 338).
6. Load data low byte using programming instructions 6e. A “0” will program the fuse, a “1” will unprogram the fuse.
7. Write Fuse low byte using programming instruction 6f.
8. Poll for Fuse write complete using programming instruction 6g, or wait for t_{WLRH} (refer to Table 30-14 on page 338).

30.9.21 Programming the Lock Bits

1. Enter JTAG instruction PROG_COMMANDS.
2. Enable Lock bit write using programming instruction 7a.
3. Load data using programming instructions 7b. A bit value of “0” will program the corresponding lock bit, a “1” will leave the lock bit unchanged.
4. Write Lock bits using programming instruction 7c.
5. Poll for Lock bit write complete using programming instruction 7d, or wait for t_{WLRH} (refer to Table 30-14 on page 338).

30.9.22 Reading the Fuses and Lock Bits

1. Enter JTAG instruction PROG_COMMANDS.
2. Enable Fuse/Lock bit read using programming instruction 8a.
3. To read all Fuses and Lock bits, use programming instruction 8e.
   To only read Fuse High byte, use programming instruction 8b.
   To only read Fuse Low byte, use programming instruction 8c.
   To only read Lock bits, use programming instruction 8d.

30.9.23 Reading the Signature Bytes

1. Enter JTAG instruction PROG_COMMANDS.
2. Enable Signature byte read using programming instruction 9a.
3. Load address 0x00 using programming instruction 9b.
4. Read first signature byte using programming instruction 9c.
5. Repeat steps 3 and 4 with address 0x01 and address 0x02 to read the second and third signature bytes, respectively.

30.9.24 Reading the Calibration Byte

1. Enter JTAG instruction PROG_COMMANDS.
2. Enable Calibration byte read using programming instruction 10a.
3. Load address 0x00 using programming instruction 10b.
4. Read the calibration byte using programming instruction 10c.

31. Electrical Characteristics

Absolute Maximum Ratings*

Operating Temperature	-55°C to +125°C
Storage Temperature	-65°C to +150°C
Voltage on any Pin except $\overline{RESET}$ with respect to Ground	-0.5V to V_{CC}+0.5V
Voltage on $\overline{RESET}$ with respect to Ground	-0.5V to +13.0V
Maximum Operating Voltage	6.0V
DC Current per I/O Pin	40.0mA
DC Current V_{CC} and GND Pins	200.0mA

*NOTICE: Stresses beyond those listed under "Absolute Maximum Ratings" may cause permanent damage to the device. This is a stress rating only and functional operation of the device at these or other conditions beyond those indicated in the operational sections of this specification is not implied. Exposure to absolute maximum rating conditions for extended periods may affect device reliability.

31.1 DC Characteristics

T_A = -40°C to 85°C, V_{CC} = 1.8V to 5.5V (unless otherwise noted)

Symbol	Parameter	Condition	Min.	Typ.	Max.	Units
V_{IL}	Input Low Voltage, Except XTAL1 and Reset pin	V_{CC} = 1.8V - 2.4V V_{CC} = 2.4V - 5.5V	-0.5 -0.5		0.2V_{CC}[1] 0.3V_{CC}[1]	V
V_{IL1}	Input Low Voltage, XTAL1 pin	V_{CC} = 1.8V - 5.5V	-0.5		0.1V_{CC}[1]	
V_{IL2}	Input Low Voltage, RESET pin	V_{CC} = 1.8V - 5.5V	-0.5		0.1V_{CC}[1]	
V_{IH}	Input High Voltage, Except XTAL1 and RESET pins	V_{CC} = 1.8V - 2.4V V_{CC} = 2.4V - 5.5V	0.7V_{CC}[2] 0.6V_{CC}[2]		V_{CC} + 0.5 V_{CC} + 0.5	
V_{IH1}	Input High Voltage, XTAL1 pin	V_{CC} = 1.8V - 2.4V V_{CC} = 2.4V - 5.5V	0.8V_{CC}[2] 0.7V_{CC}[2]		V_{CC} + 0.5 V_{CC} + 0.5	
V_{IH2}	Input High Voltage, RESET pin	V_{CC} = 1.8V - 5.5V	0.9V_{CC}[2]		V_{CC} + 0.5	
V_{OL}	Output Low Voltage[3], Except RESET pin	I_{OL} = 20mA, V_{CC} = 5V I_{OL} = 10mA, V_{CC} = 3V			0.9 0.6	
V_{OH}	Output High Voltage[4], Except RESET pin	I_{OH} = -20mA, V_{CC} = 5V I_{OH} = -10mA, V_{CC} = 3V	4.2 2.3			
I_{IL}	Input Leakage Current I/O Pin	V_{CC} = 5.5V, pin low (absolute value)			1	µA
I_{IH}	Input Leakage Current I/O Pin	V_{CC} = 5.5V, pin high (absolute value)			1	
R_{RST}	Reset Pull-up Resistor		30		60	kΩ
R_{PU}	I/O Pin Pull-up Resistor		20		50	

T_A = -40°C to 85°C, V_{CC} = 1.8V to 5.5V (unless otherwise noted) (Continued)

Symbol	Parameter	Condition	Min.	Typ.	Max.	Units
I_{CC}	Power Supply Current[5]	Active 1MHz, V_{CC} = 2V (ATmega640/1280/2560/1V)		0.5	0.8	mA
		Active 4MHz, V_{CC} = 3V (ATmega640/1280/2560/1L)		3.2	5	
		Active 8MHz, V_{CC} = 5V (ATmega640/1280/1281/2560/2561)		10	14	
		Idle 1MHz, V_{CC} = 2V (ATmega640/1280/2560/1V)		0.14	0.22	
		Idle 4MHz, V_{CC} = 3V (ATmega640/1280/2560/1L)		0.7	1.1	
		Idle 8MHz, V_{CC} = 5V (ATmega640/1280/1281/2560/2561)		2.7	4	
	Power-down mode	WDT enabled, V_{CC} = 3V		<5	15	µA
		WDT disabled, V_{CC} = 3V		<1	7.5	
V_{ACIO}	Analog Comparator Input Offset Voltage	V_{CC} = 5V V_{in} = V_{CC}/2		<10	40	mV
I_{ACLK}	Analog Comparator Input Leakage Current	V_{CC} = 5V V_{in} = V_{CC}/2	-50		50	nA
t_{ACID}	Analog Comparator Propagation Delay	V_{CC} = 2.7V V_{CC} = 4.0V		750 500		ns

Notes:
1. "Max" means the highest value where the pin is guaranteed to be read as low.
2. "Min" means the lowest value where the pin is guaranteed to be read as high.
3. Although each I/O port can sink more than the test conditions (20mA at VCC = 5V, 10mA at VCC = 3V) under steady state conditions (non-transient), the following must be observed:
   ATmega1281/2561:
   1.)The sum of all IOL, for ports A0-A7, G2, C4-C7 should not exceed 100mA.
   2.)The sum of all IOL, for ports C0-C3, G0-G1, D0-D7 should not exceed 100mA.
   3.)The sum of all IOL, for ports G3-G5, B0-B7, E0-E7 should not exceed 100mA.
   4.)The sum of all IOL, for ports F0-F7 should not exceed 100mA.
   ATmega640/1280/2560:
   1.)The sum of all IOL, for ports J0-J7, A0-A7, G2 should not exceed 200mA.
   2.)The sum of all IOL, for ports C0-C7, G0-G1, D0-D7, L0-L7 should not exceed 200mA.
   3.)The sum of all IOL, for ports G3-G4, B0-B7, H0-B7 should not exceed 200mA.
   4.)The sum of all IOL, for ports E0-E7, G5 should not exceed 100mA.
   5.)The sum of all IOL, for ports F0-F7, K0-K7 should not exceed 100mA.
   If IOL exceeds the test condition, VOL may exceed the related specification. Pins are not guaranteed to sink current greater than the listed test condition.
4. Although each I/O port can source more than the test conditions (20mA at VCC = 5V, 10mA at VCC = 3V) under steady state conditions (non-transient), the following must be observed:
   ATmega1281/2561:
   1)The sum of all IOH, for ports A0-A7, G2, C4-C7 should not exceed 100mA.
   2)The sum of all IOH, for ports C0-C3, G0-G1, D0-D7 should not exceed 100mA.
   3)The sum of all IOH, for ports G3-G5, B0-B7, E0-E7 should not exceed 100mA.
   4)The sum of all IOH, for ports F0-F7 should not exceed 100mA.
   ATmega640/1280/2560:
   1)The sum of all IOH, for ports J0-J7, G2, A0-A7 should not exceed 200mA.
   2)The sum of all IOH, for ports C0-C7, G0-G1, D0-D7, L0-L7 should not exceed 200mA.
   3)The sum of all IOH, for ports G3-G4, B0-B7, H0-H7 should not exceed 200mA.
   4)The sum of all IOH, for ports E0-E7, G5 should not exceed 100mA.
   5)The sum of all IOH, for ports F0-F7, K0-K7 should not exceed 100mA.

If IOH exceeds the test condition, VOH may exceed the related specification. Pins are not guaranteed to source current greater than the listed test condition.

5. Values with "PRR1 – Power Reduction Register 1" on page 56 enabled (0xFF).

31.2 Speed Grades

Maximum frequency is depending on $V_{CC.}$ As shown in Figure 31-1 trough Figure 31-4 on page 358, the Maximum Frequency vs. V_{CC} curve is linear between 1.8V < V_{CC} < 2.7V and between 2.7V < V_{CC} < 4.5V.

31.2.1 8MHz

Figure 31-1. Maximum Frequency vs. V_{CC}, ATmega640V/1280V/1281V/2560V/2561V

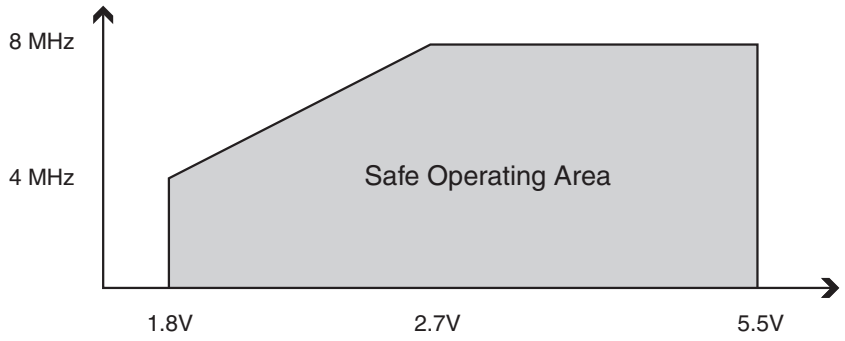

Figure 31-2. Maximum Frequency vs. V_{CC} when also No-Read-While-Write Section[(1)], ATmega2560V/ATmega2561V, is used

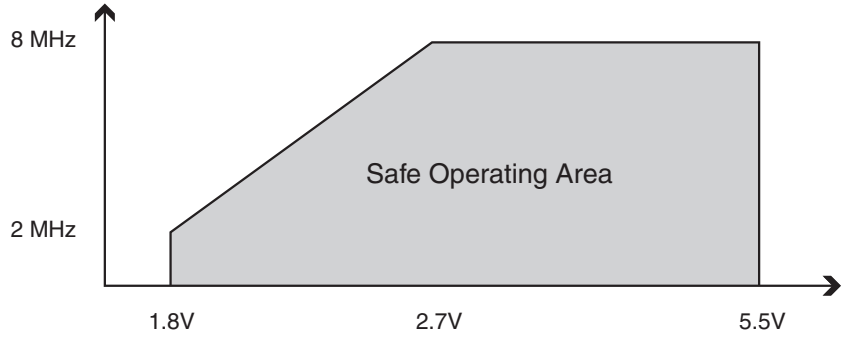

Note: 1. When only using the Read-While-Write Section of the program memory, a higher speed can be achieved at low voltage, see "Read-While-Write and No Read-While-Write Flash Sections" on page 310 for addresses.

31.2.2 16MHz

Figure 31-3. Maximum Frequency vs. V_{CC}, ATmega640/ATmega1280/ATmega1281

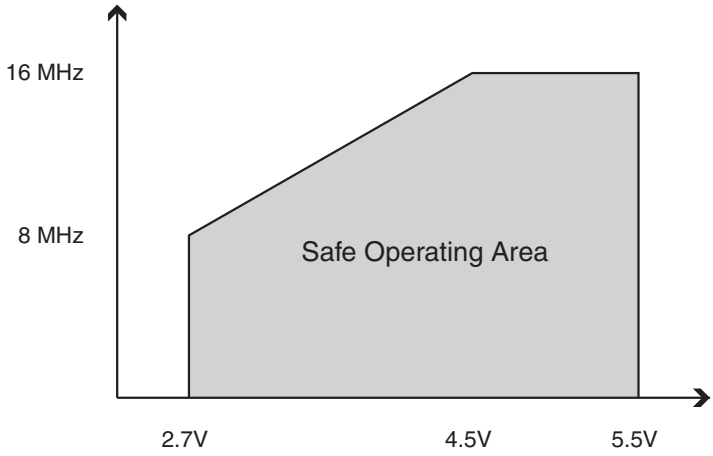

Figure 31-4. Maximum Frequency vs. V_{CC}, ATmega2560/ATmega2561

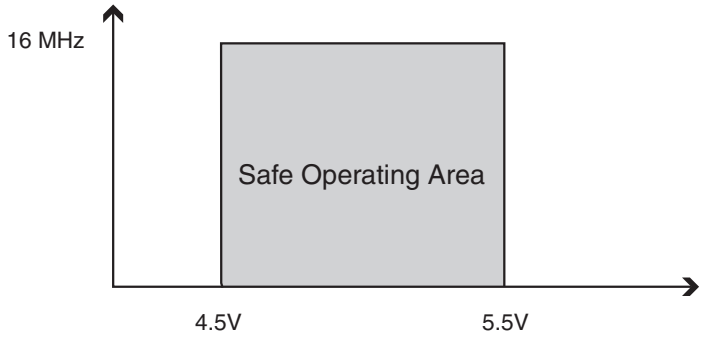

31.3 Clock Characteristics

31.3.1 Calibrated Internal RC Oscillator Accuracy

Table 31-1. Calibration Accuracy of Internal RC Oscillator

	Frequency	V_{CC}	Temperature	Calibration Accuracy
Factory Calibration	8.0MHz	3V	25°C	±10%
User Calibration	7.3MHz - 8.1MHz	1.8V - 5.5V(1) 2.7V - 5.5V(2)	-40°C - 85°C	±1%

Notes: 1. Voltage range for ATmega640V/1281V/1280V/2561V/2560V.
2. Voltage range for ATmega640/1281/1280/2561/2560.

31.3.2 External Clock Drive Waveforms

Figure 31-5. External Clock Drive Waveforms

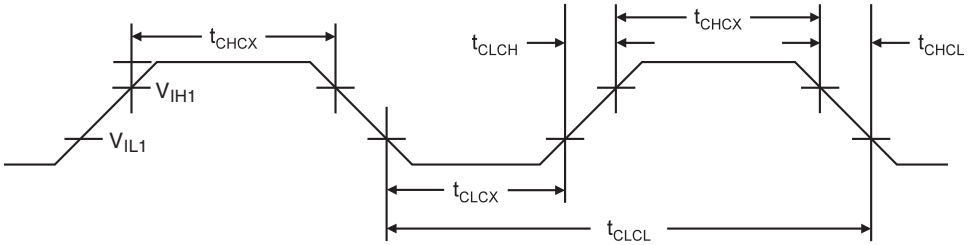

31.4 External Clock Drive

Table 31-2. External Clock Drive

Symbol	Parameter	V_{CC} = 1.8V - 5.5V		V_{CC} = 2.7V - 5.5V		V_{CC} = 4.5V - 5.5V		Units
		Min.	Max.	Min.	Max.	Min.	Max.	
$1/t_{CLCL}$	Oscillator Frequency	0	2	0	8	0	16	MHz
t_{CLCL}	Clock Period	500		125		62.5		ns
t_{CHCX}	High Time	200		50		25		ns
t_{CLCX}	Low Time	200		50		25		ns
t_{CLCH}	Rise Time		2.0		1.6		0.5	µs
t_{CHCL}	Fall Time		2.0		1.6		0.5	µs
Δt_{CLCL}	Change in period from one clock cycle to the next		2		2		2	%

31.5 System and Reset Characteristics

Table 31-3. Reset, Brown-out and Internal voltage CharacteristicsCharacteristics

Symbol	Parameter	Condition	Min	Typ	Max	Units
V_{RST}	$\overline{RESET}$ Pin Threshold Voltage		$0.2V_{CC}$		$0.9V_{CC}$	V
t_{RST}	Minimum pulse width on $\overline{RESET}$ Pin				2.5	µs
V_{HYST}	Brown-out Detector Hysteresis			50		mV
t_{BOD}	Min Pulse Width on Brown-out Reset			2		µs
V_{BG}	Bandgap reference voltage	V_{CC}=2.7V, T_A= 25°C	1.0	1.1	1.2	V
t_{BG}	Bandgap reference start-up time	V_{CC}=2.7V, T_A= 25°C		40	70	µs
I_{BG}	Bandgap reference current consumption	V_{CC}=2.7V, T_A= 25°C		10		µA

Note: 1. The Power-on Reset will not work unless the supply voltage has been below V_{POT} (falling).

31.5.1 Standard Power-On Reset

This implementation of power-on reset existed in early versions of ATmega640/1280/1281/2560/2561. The table below describes the characteristics of this power-on reset and it is valid for the following devices only:

- ATmega640: revision A
- ATmega1280: revision A
- ATmega1281: revision A
- ATmega2560: revision A to E
- ATmega2561: revision A to E

Table 31-4. Characteristics of Standard Power-On Reset. T_A= -40 to +85°C.

Symbol	Parameter	Min.(1)	Typ.(1)	Max.(1)	Units
V_{POT}	Power-on Reset Threshold Voltage (rising)(2)	0.7	1.0	1.4	V
	Power-on Reset Threshold Voltage (falling)(3)	0.05	0.9	1.3	V
V_{PSR}	Power-on slope rate	0.01		4.5	V/ms

Notes: 1. Values are guidelines only.
2. Threshold where device is released from reset when voltage is rising.
3. The power-on reset threshold voltage (falling) will not work unless the supply voltage has been below V_{POT}.

31.5.2 Enhanced Power-On Reset

This implementation of power-on reset exists in newer versions of ATmega640/1280/1281/2560/2561. The table below describes the characteristics of this power-on reset and it is valid for the following devices only:

- ATmega640: revision B and newer
- ATmega1280: revision B and newer
- ATmega1281: revision B and newer
- ATmega2560: revision F and newer
- ATmega2561: revision F and newer

Table 31-5. Characteristics of Enhanced Power-On Reset. T_A= -40 to +85°C.

Symbol	Parameter	Min.[1]	Typ.[1]	Max.[1]	Units
V_{POT}	Power-on Reset Threshold Voltage (rising)[2]	1.1	1.4	1.6	V
	Power-on Reset Threshold Voltage (falling)[3]	0.6	1.3	1.6	V
V_{PSR}	Power-On Slope Rate	0.01			V/ms

Notes: 1. Values are guidelines only.
2. Threshold where device is released from reset when voltage is rising.
3. The power-on reset threshold voltage (falling) will not work unless the supply voltage has been below V_{POT}.

Table 31-6. BODLEVEL Fuse Coding[1]

BODLEVEL 2:0 Fuses	Min. V_{BOT}	Typ. V_{BOT}	Max. V_{BOT}	Units
111	BOD Disabled			
110	1.7	1.8	2.0	V
101	2.5	2.7	2.9	
100	4.1	4.3	4.5	
011	Reserved			
010				
001				
000				

Note: 1. V_{BOT} may be below nominal minimum operating voltage for some devices. For devices where this is the case, the device is tested down to V_{CC} = V_{BOT} during the production test. This guarantees that a Brown-Out Reset will occur before V_{CC} drops to a voltage where correct operation of the microcontroller is no longer guaranteed. The test is performed using BODLEVEL = 110 for 4MHz operation of ATmega640V/1280V/1281V/2560V/2561V, BODLEVEL = 101 for 8MHz operation of ATmega640V/1280V/1281V/2560V/2561V and ATmega640/1280/1281, and BODLEVEL = 100 for 16MHz operation of ATmega640/1280/1281/2560/2561.

31.6 2-wire Serial Interface Characteristics

Table 31-7 on page 362 describes the requirements for devices connected to the 2-wire Serial Bus. The ATmega640/1280/1281/2560/2561 2-wire Serial Interface meets or exceeds these requirements under the noted conditions.

Timing symbols refer to Figure 31-6 on page 363.

Table 31-7. 2-wire Serial Bus Requirements

Symbol	Parameter	Condition	Min.	Max.	Units
V_{IL}	Input Low-voltage		-0.5	0.3 V_{CC}	V
V_{IH}	Input High-voltage		0.7 V_{CC}	V_{CC} + 0.5	
V_{hys} (1)	Hysteresis of Schmitt Trigger Inputs		0.05 V_{CC} (2)	–	
V_{OL} (1)	Output Low-voltage	3mA sink current	0	0.4	
t_r (1)	Rise Time for both SDA and SCL		20 + 0.1C_b (3)(2)	300	ns
t_{of} (1)	Output Fall Time from V_{IHmin} to V_{ILmax}	10pF < C_b < 400pF (3)	20 + 0.1C_b (3)(2)	250	
t_{SP} (1)	Spikes Suppressed by Input Filter		0	50 (2)	
I_i	Input Current each I/O Pin	0.1V_{CC} < V_i < 0.9V_{CC}	-10	10	µA
C_i (1)	Capacitance for each I/O Pin		–	10	pF
f_{SCL}	SCL Clock Frequency	f_{CK} (4) > max(16f_{SCL}, 250kHz) (5)	0	400	kHz
Rp	Value of Pull-up resistor	$f_{SCL} \leq$ 100kHz	$\frac{V_{CC} - 0.4V}{3mA}$	$\frac{1000ns}{C_b}$	Ω
		f_{SCL} > 100kHz	$\frac{V_{CC} - 0.4V}{3mA}$	$\frac{300\ ns}{C_b}$	
$t_{HD;STA}$	Hold Time (repeated) START Condition	$f_{SCL} \leq$ 100kHz	4.0	–	µs
		f_{SCL} > 100kHz	0.6	–	
t_{LOW}	Low Period of the SCL Clock	$f_{SCL} \leq$ 100kHz (6)	4.7	–	
		f_{SCL} > 100kHz (7)	1.3	–	
t_{HIGH}	High period of the SCL clock	$f_{SCL} \leq$ 100kHz	4.0	–	
		f_{SCL} > 100kHz	0.6	–	
$t_{SU;STA}$	Set-up time for a repeated START condition	$f_{SCL} \leq$ 100kHz	4.7	–	
		f_{SCL} > 100kHz	0.6	–	
$t_{HD;DAT}$	Data hold time	$f_{SCL} \leq$ 100kHz	0	3.45	
		f_{SCL} > 100kHz	0	0.9	
$t_{SU;DAT}$	Data setup time	$f_{SCL} \leq$ 100kHz	250	–	
		f_{SCL} > 100kHz	100	–	
$t_{SU;STO}$	Setup time for STOP condition	$f_{SCL} \leq$ 100kHz	4.0	–	
		f_{SCL} > 100kHz	0.6	–	
t_{BUF}	Bus free time between a STOP and START condition	$f_{SCL} \leq$ 100kHz	4.7	–	
		f_{SCL} > 100kHz	1.3	–	

Note:
1. In ATmega640/1280/1281/2560/2561, this parameter is characterized and not 100% tested.
2. Required only for f_{SCL} > 100kHz.
3. C_b = capacitance of one bus line in pF.
4. f_{CK} = CPU clock frequency.
5. This requirement applies to all ATmega640/1280/1281/2560/2561 2-wire Serial Interface operation. Other devices connected to the 2-wire Serial Bus need only obey the general f_{SCL} requirement.

6. The actual low period generated by the ATmega640/1280/1281/2560/2561 2-wire Serial Interface is ($1/f_{SCL}$ - $2/f_{CK}$), thus f_{CK} must be greater than 6MHz for the low time requirement to be strictly met at f_{SCL} = 100kHz.
7. The actual low period generated by the ATmega640/1280/1281/2560/2561 2-wire Serial Interface is ($1/f_{SCL}$ - $2/f_{CK}$), thus the low time requirement will not be strictly met for f_{SCL} > 308kHz when f_{CK} = 8MHz. Still, ATmega640/1280/1281/2560/2561 devices connected to the bus may communicate at full speed (400kHz) with other ATmega640/1280/1281/2560/2561 devices, as well as any other device with a proper t_{LOW} acceptance margin.

Figure 31-6. 2-wire Serial Bus Timing

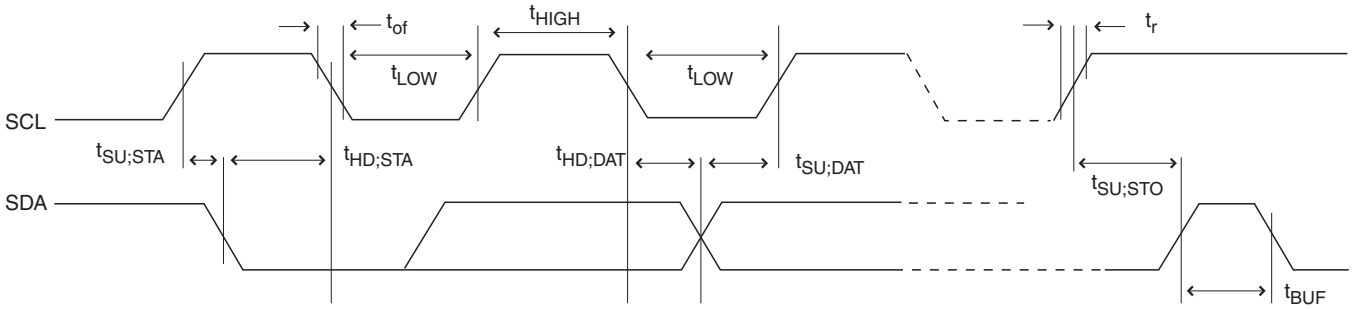

31.7 SPI Timing Characteristics

See Figure 31-7 and Figure 31-8 on page 364 for details.

Table 31-8. SPI Timing Parameters

	Description	Mode	Min.	Typ.	Max.	
1	SCK period	Master		See Table 21-5 on page 198		ns
2	SCK high/low	Master		50% duty cycle		
3	Rise/Fall time	Master		3.6		
4	Setup	Master		10		
5	Hold	Master		10		
6	Out to SCK	Master		0.5 • t_{sck}		
7	SCK to out	Master		10		
8	SCK to out high	Master		10		
9	$\overline{SS}$ low to out	Slave		15		
10	SCK period	Slave	4 • t_{ck}			
11	SCK high/low(1)	Slave	2 • t_{ck}			
12	Rise/Fall time	Slave			1600	
13	Setup	Slave	10			
14	Hold	Slave	t_{ck}			
15	SCK to out	Slave		15		
16	SCK to $\overline{SS}$ high	Slave	20			
17	$\overline{SS}$ high to tri-state	Slave		10		
18	$\overline{SS}$ low to SCK	Slave	20			

Note: 1. In SPI Programming mode the minimum SCK high/low period is:
- 2 t_{CLCL} for f_{CK} < 12MHz
- 3 t_{CLCL} for f_{CK} > 12MHz

Figure 31-7. SPI Interface Timing Requirements (Master Mode)

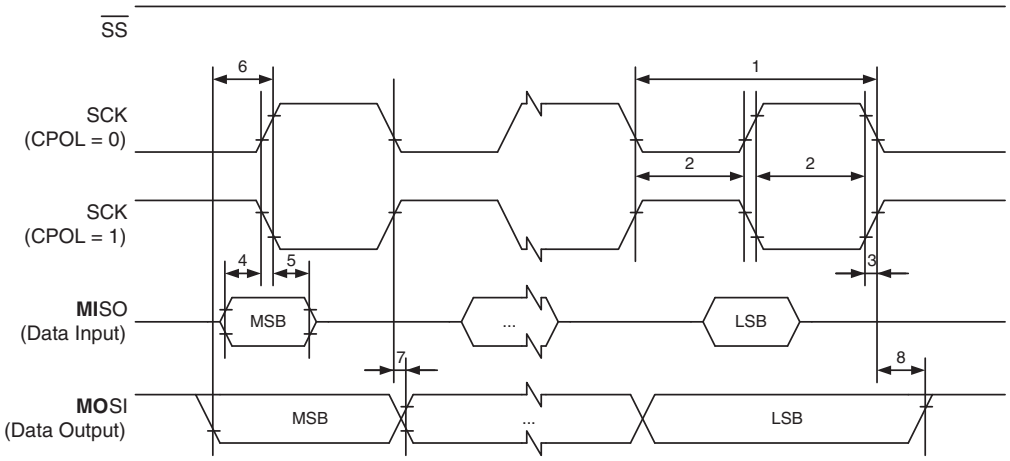

Figure 31-8. SPI Interface Timing Requirements (Slave Mode)

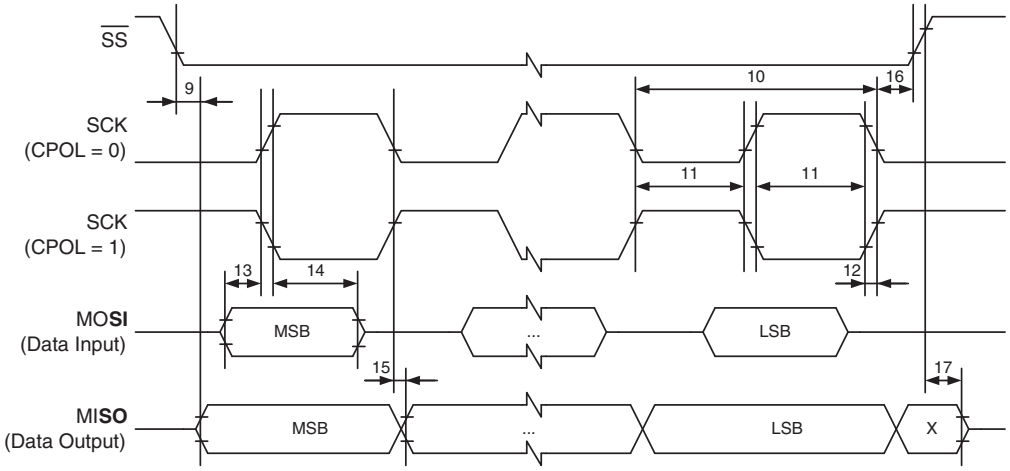

31.8 ADC Characteristics – Preliminary Data

Table 31-9. ADC Characteristics, Singel Ended Channels

Symbol	Parameter	Condition	Min. [1]	Typ. [1]	Max. [1]	Units
	Resolution	Single Ended Conversion		10		Bits
	Absolute accuracy (Including INL, DNL, quantization error, gain and offset error)	Single Ended Conversion V_{REF} = 4V, V_{CC} = 4V, CLK_{ADC}= 200kHz		2.25	2.5	LSB
		Single Ended Conversion V_{REF} = 4V, V_{CC} = 4V, CLK_{ADC} = 1MHz		3		
		Single Ended Conversion V_{REF} = 4V, V_{CC} = 4V, CLK_{ADC} = 200kHz Noise Reduction Mode		2		
		Single Ended Conversion V_{REF} = 4V, V_{CC} = 4V, CLK_{ADC} = 1MHz Noise Reduction Mode		3		
	Integral Non-Linearity (INL)	Single Ended Conversion V_{REF} = 4V, V_{CC} = 4V, CLK_{ADC} = 200kHz		1.25		
	Differential Non-Linearity (DNL)	Single Ended Conversion V_{REF} = 4V, V_{CC} = 4V, CLK_{ADC} = 200kHz		0.5		
	Gain Error	Single Ended Conversion V_{REF} = 4V, V_{CC} = 4V, CLK_{ADC}= 200kHz		2		
	Offset Error	Single Ended Conversion V_{REF} = 4V, V_{CC} = 4V, CLK_{ADC} = 200kHz		-2		
	Conversion Time	Free Running Conversion	13		260	µs
	Clock Frequency	Single Ended Conversion	50		1000	kHz
AVCC	Analog Supply Voltage		V_{CC} - 0.3		V_{CC} + 0.3	V
V_{REF}	Reference Voltage		1.0		AVCC	
V_{IN}	Input Voltage		GND		V_{REF}	
	Input Bandwidth			38,5		kHz
V_{INT1}	Internal Voltage Reference	1.1V	1.0	1.1	1.2	V
V_{INT2}	Internal Voltage Reference	2.56V	2.4	2.56	2.8	
R_{REF}	Reference Input Resistance			32		kΩ
R_{AIN}	Analog Input Resistance			100		MΩ

Note: 1. Values are guidelines only.

Table 31-10. ADC Characteristics, Differential Channels

Symbol	Parameter	Condition	Min. (1)	Typ. (1)	Max. (1)	Units
	Resolution	Gain = 1×		8		Bits
		Gain = 10×		8		
		Gain = 200×		7		
	Absolute Accuracy(Including INL, DNL, Quantization Error, Gain and Offset Error)	Gain = 1× V_{REF} = 4V, V_{CC} = 5V CLK_{ADC} = 50 - 200kHz		18		LSB
		Gain = 10× V_{REF} = 4V, V_{CC} = 5V CLK_{ADC} = 50 - 200kHz		17		
		Gain = 200× V_{REF} = 4V, V_{CC} = 5V CLK_{ADC} = 50 - 200kHz		9		
	Integral Non-Linearity (INL)	Gain = 1× V_{REF} = 4V, V_{CC} = 5V CLK_{ADC} = 50 - 200kHz		2.5		
		Gain = 10× V_{REF} = 4V, V_{CC} = 5V CLK_{ADC} = 50 - 200kHz		5		
		Gain = 200× V_{REF} = 4V, V_{CC} = 5V CLK_{ADC} = 50 - 200kHz		9		
	Differential Non-Linearity (DNL)	Gain = 1× V_{REF} = 4V, V_{CC} = 5V CLK_{ADC} = 50 - 200kHz		0.75		
		Gain = 10× V_{REF} = 4V, V_{CC} = 5V CLK_{ADC} = 50 - 200kHz		1.5		
		Gain = 200× V_{REF} = 4V, V_{CC} = 5V CLK_{ADC} = 50 - 200kHz		10		
	Gain Error	Gain = 1×		1.7		%
		Gain = 10×		1.7		
		Gain = 200×		0.5		
	Offset Error	Gain = 1× V_{REF} = 4V, V_{CC} = 5V CLK_{ADC} = 50 - 200kHz		2		LSB
		Gain = 10× V_{REF} = 4V, V_{CC} = 5V CLK_{ADC} = 50 - 200kHz		2		
		Gain = 200× V_{REF} = 4V, V_{CC} = 5V CLK_{ADC} = 50 - 200kHz		3		
	Clock Frequency		50		200	kHz

Table 31-10. ADC Characteristics, Differential Channels (Continued)

Symbol	Parameter	Condition	Min. [1]	Typ. [1]	Max. [1]	Units
	Conversion Time		65		260	µs
AVCC	Analog Supply Voltage		V_{CC} - 0.3		V_{CC} + 0.3	V
V_{REF}	Reference Voltage		2.7		AVCC - 0.5	
V_{IN}	Input Voltage		GND		V_{CC}	
V_{DIFF}	Input Differential Voltage		$-V_{REF}$/Gain		V_{REF}/Gain	
	ADC Conversion Output		-511		511	LSB
	Input Bandwidth			4		kHz
V_{INT}	Internal Voltage Reference		2.3	2.56	2.8	V
R_{REF}	Reference Input Resistance			32		kΩ
R_{AIN}	Analog Input Resistance			100		MΩ

Note: Values are guidelines only.

31.9 External Data Memory Timing

Table 31-11. External Data Memory Characteristics, 4.5 to 5.5 Volts, No Wait-state

			8MHz Oscillator		Variable Oscillator		
	Symbol	Parameter	Min.	Max.	Min.	Max.	Unit
0	$1/t_{CLCL}$	Oscillator Frequency			0.0	16	MHz
1	t_{LHLL}	ALE Pulse Width	115		$1.0t_{CLCL}$-10		ns
2	t_{AVLL}	Address Valid A to ALE Low	57.5		$0.5t_{CLCL}$-5[1]		
3a	t_{LLAX_ST}	Address Hold After ALE Low, write access	5		5		
3b	t_{LLAX_LD}	Address Hold after ALE Low, read access	5		5		
4	t_{AVLLC}	Address Valid C to ALE Low	57.5		$0.5t_{CLCL}$-5[1]		
5	t_{AVRL}	Address Valid to RD Low	115		$1.0t_{CLCL}$-10		
6	t_{AVWL}	Address Valid to WR Low	115		$1.0t_{CLCL}$-10		
7	t_{LLWL}	ALE Low to WR Low	47.5	67.5	$0.5t_{CLCL}$-15[2]	$0.5t_{CLCL}$+5[2]	
8	t_{LLRL}	ALE Low to RD Low	47.5	67.5	$0.5t_{CLCL}$-15[2]	$0.5t_{CLCL}$+5[2]	
9	t_{DVRH}	Data Setup to RD High	40		40		
10	t_{RLDV}	Read Low to Data Valid		75		$1.0t_{CLCL}$-50	
11	t_{RHDX}	Data Hold After RD High	0		0		
12	t_{RLRH}	RD Pulse Width	115		$1.0t_{CLCL}$-10		
13	t_{DVWL}	Data Setup to WR Low	42.5		$0.5t_{CLCL}$-20[1]		
14	t_{WHDX}	Data Hold After WR High	115		$1.0t_{CLCL}$-10		
15	t_{DVWH}	Data Valid to WR High	125		$1.0t_{CLCL}$		
16	t_{WLWH}	WR Pulse Width	115		$1.0t_{CLCL}$-10		

Notes: 1. This assumes 50% clock duty cycle. The half period is actually the high time of the external clock, XTAL1.

2. This assumes 50% clock duty cycle. The half period is actually the low time of the external clock, XTAL1.

Table 31-12. External Data Memory Characteristics, 4.5 to 5.5 Volts, 1 Cycle Wait-state

			8MHz Oscillator		Variable Oscillator		
	Symbol	**Parameter**	**Min.**	**Max.**	**Min.**	**Max.**	**Unit**
0	$1/t_{CLCL}$	Oscillator Frequency			0.0	16	MHz
10	t_{RLDV}	Read Low to Data Valid		200		$2.0t_{CLCL}$-50	ns
12	t_{RLRH}	RD Pulse Width	240		$2.0t_{CLCL}$-10		
15	t_{DVWH}	Data Valid to WR High	240		$2.0t_{CLCL}$		
16	t_{WLWH}	WR Pulse Width	240		$2.0t_{CLCL}$-10		

Table 31-13. External Data Memory Characteristics, 4.5 to 5.5 Volts, SRWn1 = 1, SRWn0 = 0

			4MHz Oscillator		Variable Oscillator		
	Symbol	**Parameter**	**Min.**	**Max.**	**Min.**	**Max.**	**Unit**
0	$1/t_{CLCL}$	Oscillator Frequency			0.0	16	MHz
10	t_{RLDV}	Read Low to Data Valid		325		$3.0t_{CLCL}$-50	ns
12	t_{RLRH}	RD Pulse Width	365		$3.0t_{CLCL}$-10		
15	t_{DVWH}	Data Valid to WR High	375		$3.0t_{CLCL}$		
16	t_{WLWH}	WR Pulse Width	365		$3.0t_{CLCL}$-10		

Table 31-14. External Data Memory Characteristics, 4.5 to 5.5 Volts, SRWn1 = 1, SRWn0 = 1

			4MHz Oscillator		Variable Oscillator		
	Symbol	**Parameter**	**Min.**	**Max.**	**Min.**	**Max.**	**Unit**
0	$1/t_{CLCL}$	Oscillator Frequency			0.0	16	MHz
10	t_{RLDV}	Read Low to Data Valid		325		$3.0t_{CLCL}$-50	ns
12	t_{RLRH}	RD Pulse Width	365		$3.0t_{CLCL}$-10		
14	t_{WHDX}	Data Hold After WR High	240		$2.0t_{CLCL}$-10		
15	t_{DVWH}	Data Valid to WR High	375		$3.0t_{CLCL}$		
16	t_{WLWH}	WR Pulse Width	365		$3.0t_{CLCL}$-10		

Table 31-15. External Data Memory Characteristics, 2.7 to 5.5 Volts, No Wait-state

	Symbol	Parameter	4MHz Oscillator		Variable Oscillator		Unit
			Min.	Max.	Min.	Max.	
0	$1/t_{CLCL}$	Oscillator Frequency			0.0	8	MHz
1	t_{LHLL}	ALE Pulse Width	235		t_{CLCL}-15		ns
2	t_{AVLL}	Address Valid A to ALE Low	115		$0.5t_{CLCL}$-10[(1)]		
3a	t_{LLAX_ST}	Address Hold After ALE Low, write access	5		5		
3b	t_{LLAX_LD}	Address Hold after ALE Low, read access	5		5		
4	t_{AVLLC}	Address Valid C to ALE Low	115		$0.5t_{CLCL}$-10[(1)]		
5	t_{AVRL}	Address Valid to RD Low	235		$1.0t_{CLCL}$-15		
6	t_{AVWL}	Address Valid to WR Low	235		$1.0t_{CLCL}$-15		
7	t_{LLWL}	ALE Low to WR Low	115	130	$0.5t_{CLCL}$-10[(2)]	$0.5t_{CLCL}$+5[(2)]	
8	t_{LLRL}	ALE Low to RD Low	115	130	$0.5t_{CLCL}$-10[(2)]	$0.5t_{CLCL}$+5[(2)]	
9	t_{DVRH}	Data Setup to RD High	45		45		
10	t_{RLDV}	Read Low to Data Valid		190		$1.0t_{CLCL}$-60	
11	t_{RHDX}	Data Hold After RD High	0		0		
12	t_{RLRH}	RD Pulse Width	235		$1.0t_{CLCL}$-15		
13	t_{DVWL}	Data Setup to WR Low	105		$0.5t_{CLCL}$-20[(1)]		
14	t_{WHDX}	Data Hold After WR High	235		$1.0t_{CLCL}$-15		
15	t_{DVWH}	Data Valid to WR High	250		$1.0t_{CLCL}$		
16	t_{WLWH}	WR Pulse Width	235		$1.0t_{CLCL}$-15		

Notes: 1. This assumes 50% clock duty cycle. The half period is actually the high time of the external clock, XTAL1.
2. This assumes 50% clock duty cycle. The half period is actually the low time of the external clock, XTAL1.

Table 31-16. External Data Memory Characteristics, 2.7 to 5.5 Volts, SRWn1 = 0, SRWn0 = 1

	Symbol	Parameter	4MHz Oscillator		Variable Oscillator		Unit
			Min.	Max.	Min.	Max.	
0	$1/t_{CLCL}$	Oscillator Frequency			0.0	8	MHz
10	t_{RLDV}	Read Low to Data Valid		440		$2.0t_{CLCL}$-60	ns
12	t_{RLRH}	RD Pulse Width	485		$2.0t_{CLCL}$-15		
15	t_{DVWH}	Data Valid to WR High	500		$2.0t_{CLCL}$		
16	t_{WLWH}	WR Pulse Width	485		$2.0t_{CLCL}$-15		

Table 31-17. External Data Memory Characteristics, 2.7 to 5.5 Volts, SRWn1 = 1, SRWn0 = 0

	Symbol	Parameter	4MHz Oscillator		Variable Oscillator		Unit
			Min.	Max.	Min.	Max.	
0	$1/t_{CLCL}$	Oscillator Frequency			0.0	8	MHz
10	t_{RLDV}	Read Low to Data Valid		690		$3.0t_{CLCL}$-60	ns
12	t_{RLRH}	RD Pulse Width	735		$3.0t_{CLCL}$-15		
15	t_{DVWH}	Data Valid to WR High	750		$3.0t_{CLCL}$		
16	t_{WLWH}	WR Pulse Width	735		$3.0t_{CLCL}$-15		

Table 31-18. External Data Memory Characteristics, 2.7 to 5.5 Volts, SRWn1 = 1, SRWn0 = 1

	Symbol	Parameter	4MHz Oscillator		Variable Oscillator		Unit
			Min.	Max.	Min.	Max.	
0	$1/t_{CLCL}$	Oscillator Frequency			0.0	8	MHz
10	t_{RLDV}	Read Low to Data Valid		690		$3.0t_{CLCL}$-60	ns
12	t_{RLRH}	RD Pulse Width	735		$3.0t_{CLCL}$-15		
14	t_{WHDX}	Data Hold After WR High	485		$2.0t_{CLCL}$-15		
15	t_{DVWH}	Data Valid to WR High	750		$3.0t_{CLCL}$		
16	t_{WLWH}	WR Pulse Width	735		$3.0t_{CLCL}$-15		

Figure 31-9. External Memory Timing (SRWn1 = 0, SRWn0 = 0

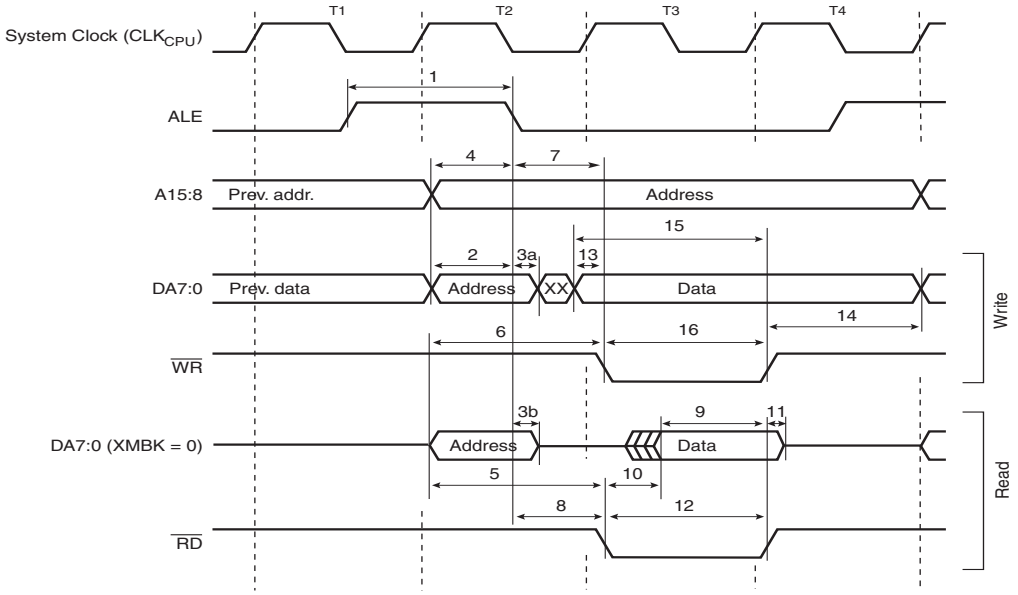

Figure 31-10. External Memory Timing (SRWn1 = 0, SRWn0 = 1)

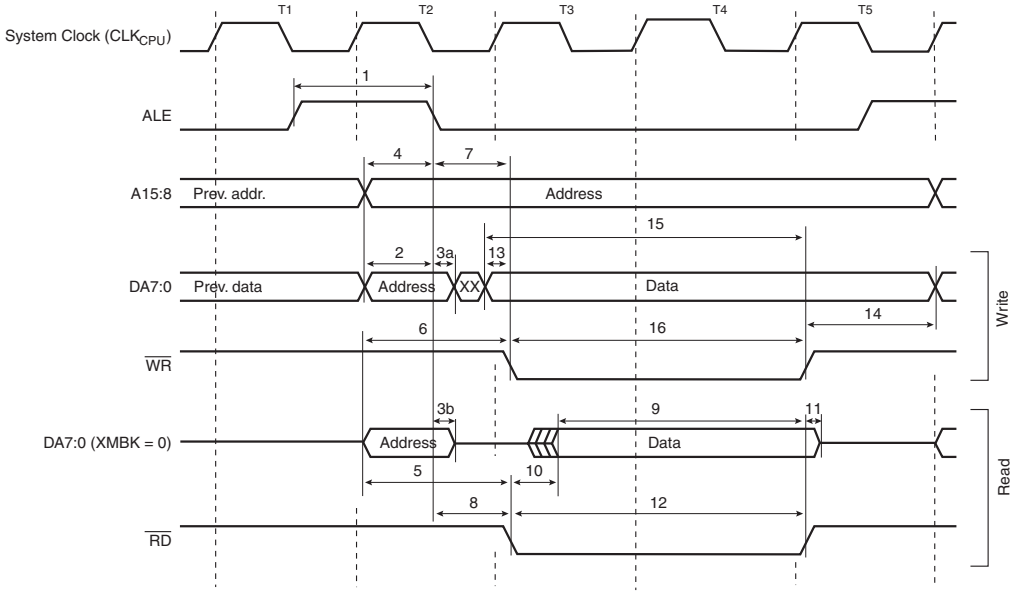

Figure 31-11. External Memory Timing (SRWn1 = 1, SRWn0 = 0)

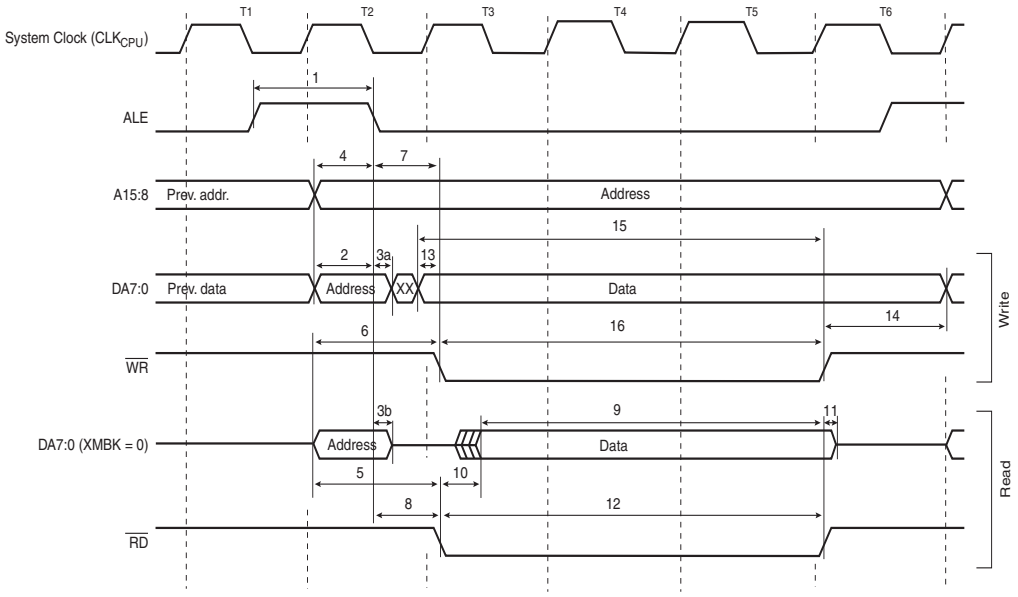

Figure 31-12. External Memory Timing (SRWn1 = 1, SRWn0 = 1)()

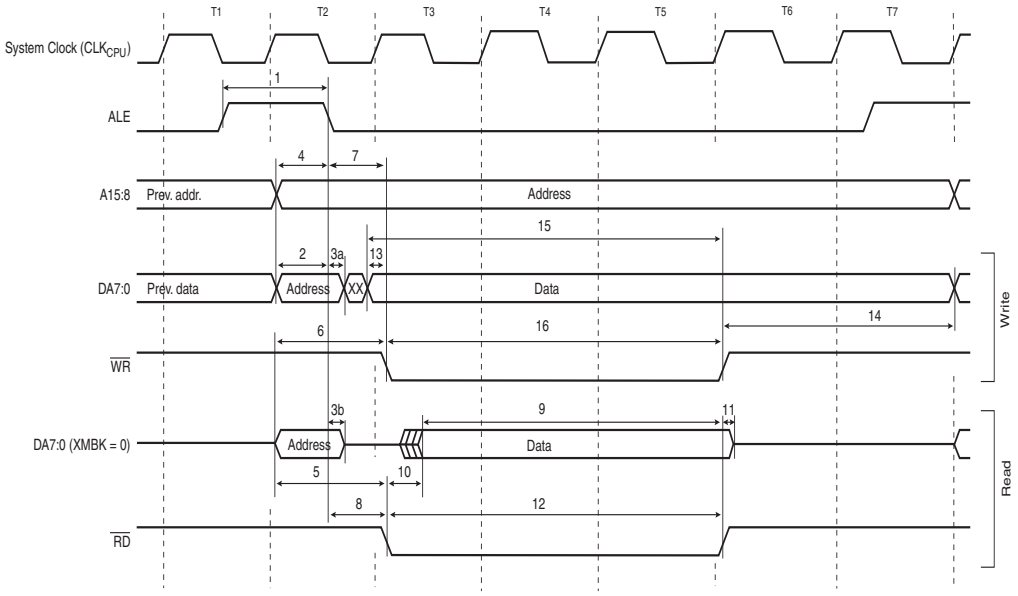

The ALE pulse in the last period (T4-T7) is only present if the next instruction accesses the RAM (internal or external).

32. Typical Characteristics

The following charts show typical behavior. These figures are not tested during manufacturing. All current consumption measurements are performed with all I/O pins configured as inputs and with internal pull-ups enabled. A sine wave generator with rail-to-rail output is used as clock source.

All Active- and Idle current consumption measurements are done with all bits in the PRR registers set and thus, the corresponding I/O modules are turned off. Also the Analog Comparator is disabled during these measurements. Table 32-1 on page 378 and Table 32-2 on page 379 show the additional current consumption compared to I_{CC} Active and I_{CC} Idle for every I/O module controlled by the Power Reduction Register. See "Power Reduction Register" on page 52 for details.

The power consumption in Power-down mode is independent of clock selection.

The current consumption is a function of several factors such as: operating voltage, operating frequency, loading of I/O pins, switching rate of I/O pins, code executed and ambient temperature. The dominating factors are operating voltage and frequency.

The current drawn from capacitive loaded pins may be estimated (for one pin) as $C_L \times V_{CC} \times f$ where C_L = load capacitance, V_{CC} = operating voltage and f = average switching frequency of I/O pin.

The parts are characterized at frequencies higher than test limits. Parts are not guaranteed to function properly at frequencies higher than the ordering code indicates.

The difference between current consumption in Power-down mode with Watchdog Timer enabled and Power-down mode with Watchdog Timer disabled represents the differential current drawn by the Watchdog Timer.

32.1 Active Supply Current

Figure 32-1. Active Supply Current vs. frequency (0.1MHz - 1.0MHz)

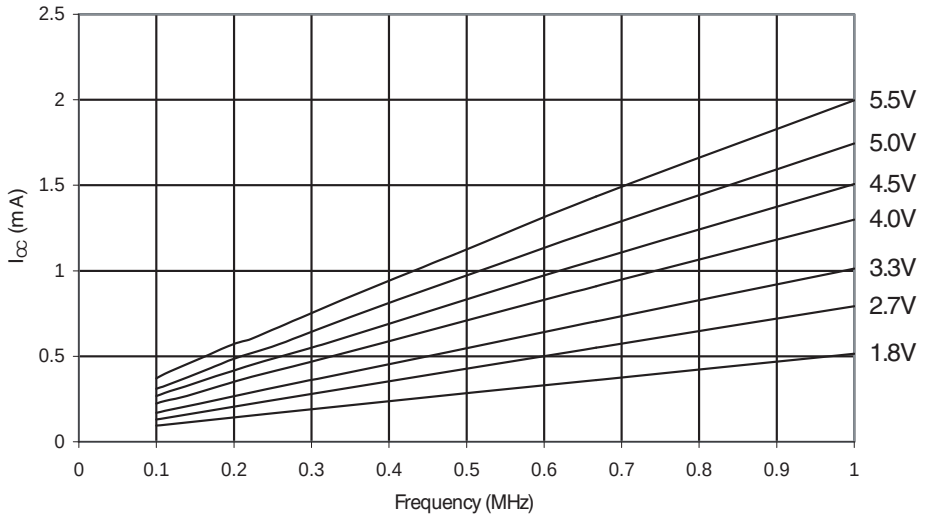

Figure 32-2. Active Supply Current vs. Frequency (1MHz - 16MHz)

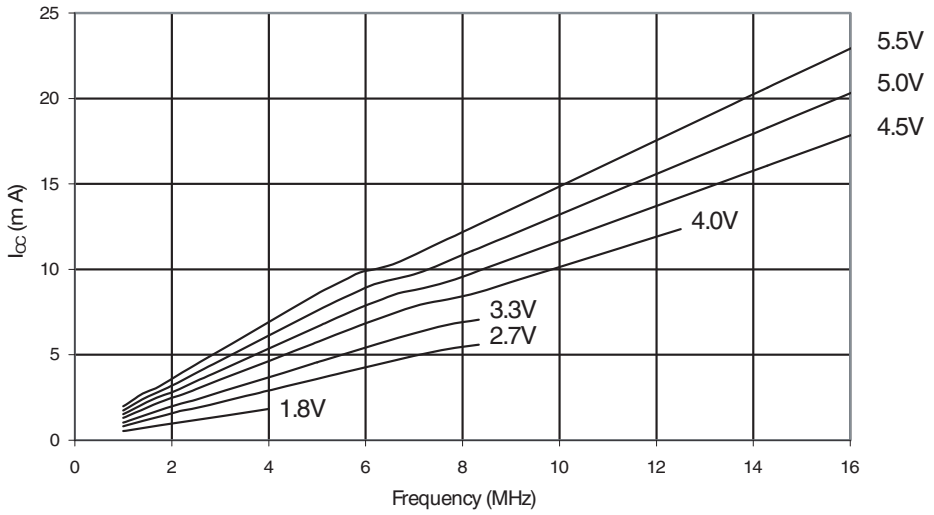

Figure 32-3. Active Supply Current vs. V_{CC} (Internal RC Oscillator, 8MHz)

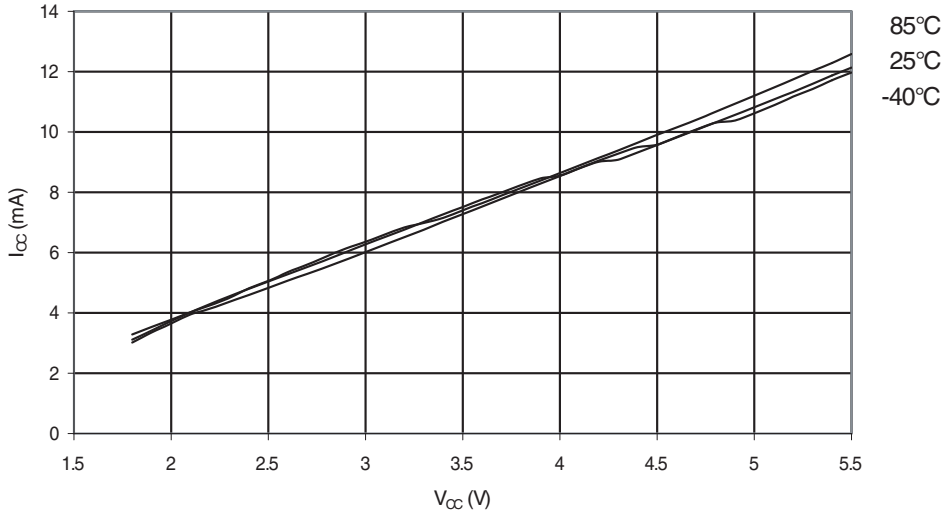

Figure 32-4. Active Supply Current vs. V_{CC} (Internal RC Oscillator, 1MHz)

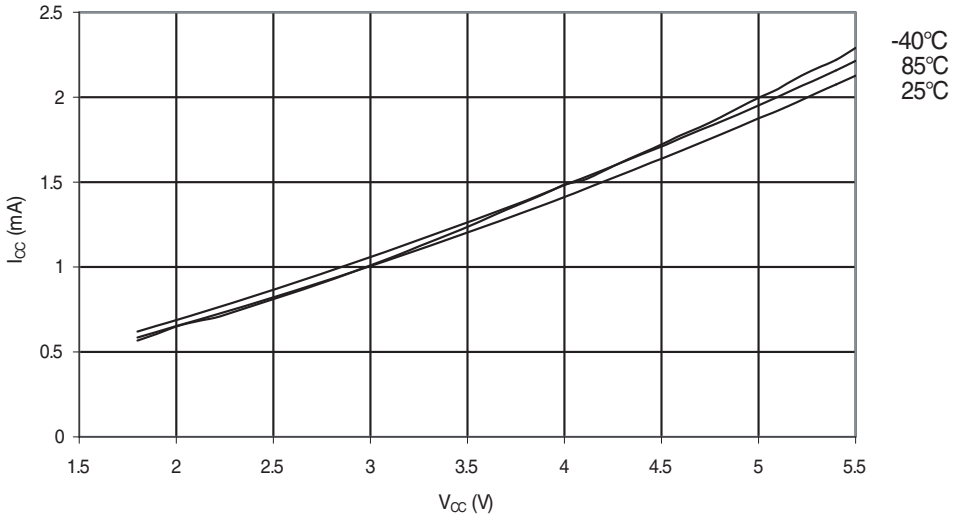

Figure 32-5. Active Supply Current vs. V_{CC} (Internal RC Oscillator, 128kHz)

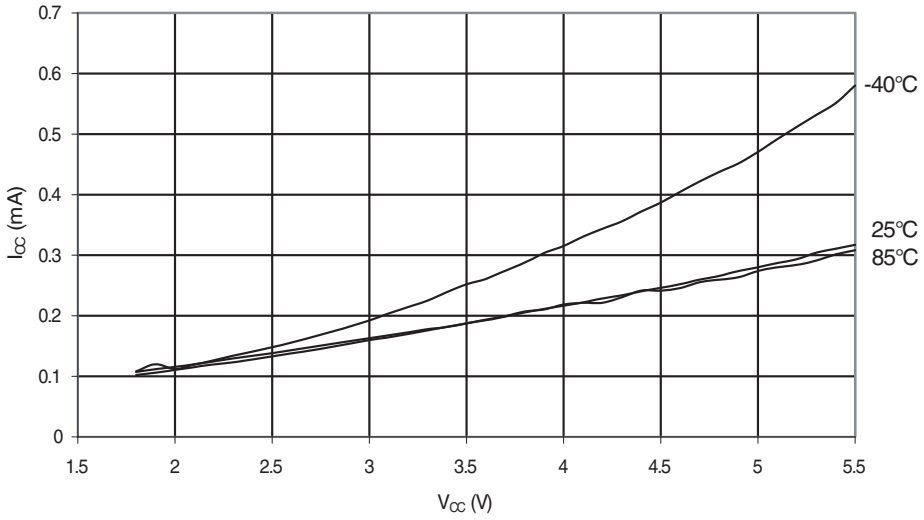

32.2 Idle Supply Current

Figure 32-6. Idle Supply Current vs. Low Frequency (0.1MHz - 1.0MHz)

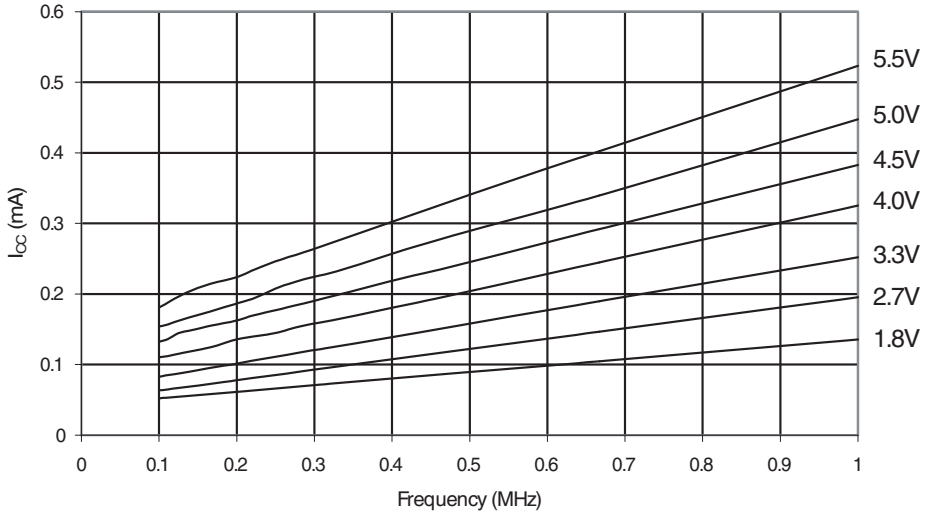

Figure 32-7. Idle Supply Current vs. Frequency (1MHz - 16MHz)

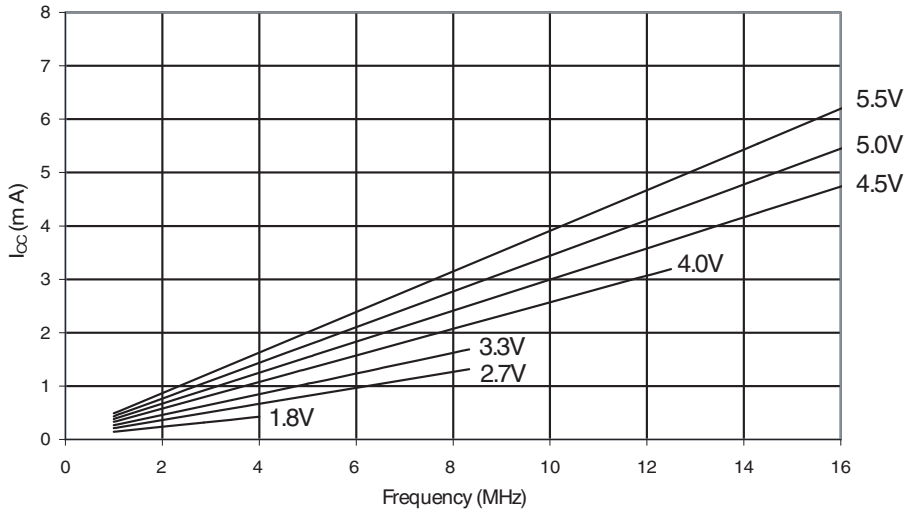

Figure 32-8. Idle Supply Current vs. V_{CC} (Internal RC Oscillator, 8MHz)

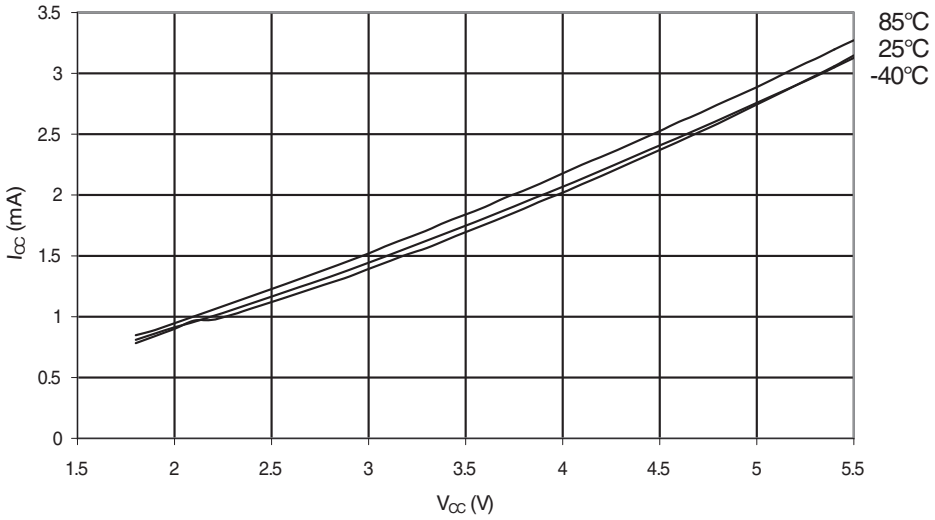

Figure 32-9. Idle Supply Current vs. V_{CC} (Internal RC Oscillator, 1MHz)

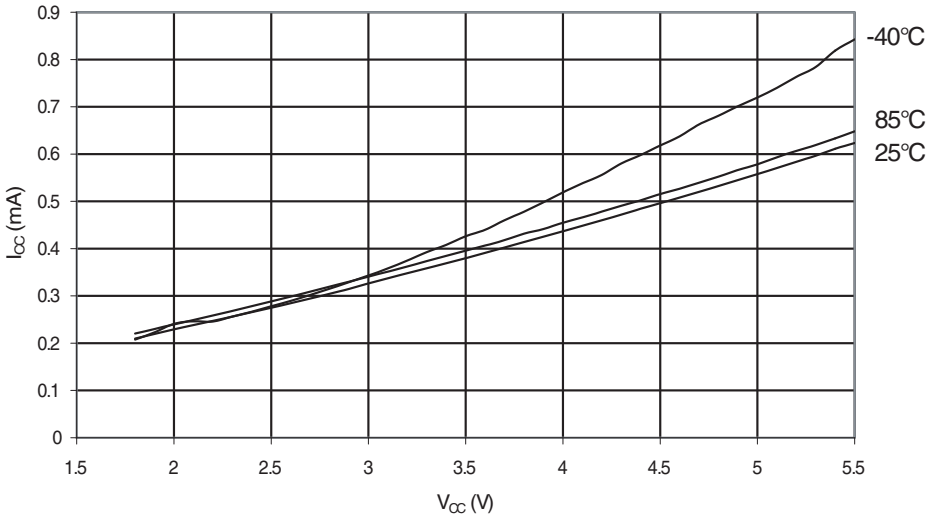

Figure 32-10. Idle Supply Current vs. V_{CC} (Internal RC Oscillator, 128kHz)I

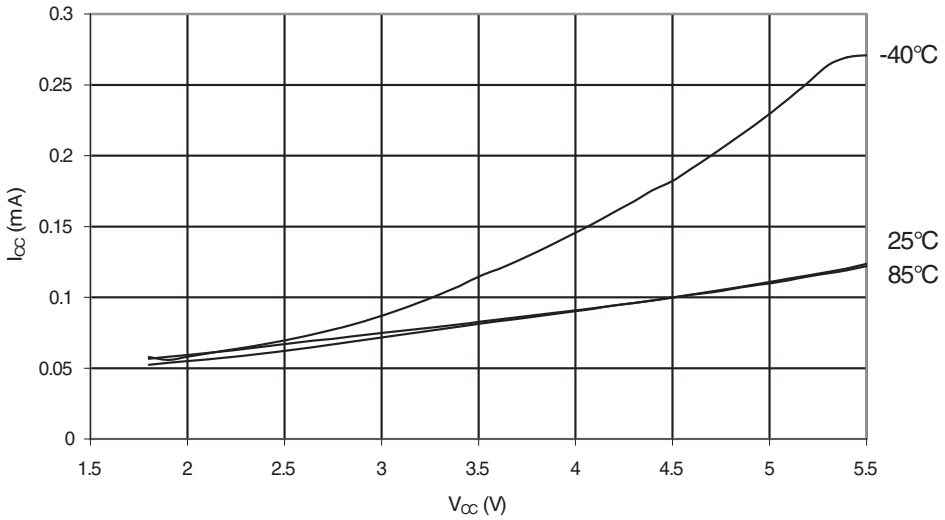

32.2.1 Supply Current of IO modules

The tables and formulas below can be used to calculate the additional current consumption for the different I/O modules in Active and Idle mode. The enabling or disabling of the I/O modules are controlled by the Power Reduction Register. See "Power Reduction Register" on page 52 for details.

Table 32-1. Additional Current Consumption for the different I/O modules (absolute values)

PRR bit	Typical numbers		
	V_{CC} = 2V, F = 1MHz	V_{CC} = 3V, F = 4MHz	V_{CC} = 5V, F = 8MHz
PRUSART3	8.0µA	51µA	220µA
PRUSART2	8.0µA	51µA	220µA
PRUSART1	8.0µA	51µA	220µA
PRUSART0	8.0µA	51µA	220µA
PRTWI	12µA	75µA	315µA
PRTIM5	6.0µA	39µA	150µA
PRTIM4	6.0µA	39µA	150µA
PRTIM3	6.0µA	39µA	150µA
PRTIM2	11µA	72µA	300µA
PRTIM1	6.0µA	39µA	150µA
PRTIM0	4.0µA	24µA	100µA
PRSPI	15µA	95µA	400µA
PRADC	12µA	75µA	315µA

Table 32-2. Additional Current Consumption (percentage) in Active and Idle mode

PRR bit	Additional Current consumption compared to Active with external clock	Additional Current consumption compared to Idle with external clock
PRUSART3	3.0%	17%
PRUSART2	3.0%	17%
PRUSART1	3.0%	17%
PRUSART0	3.0%	17%
PRTWI	4.4%	24%
PRTIM5	1.8%	10%
PRTIM4	1.8%	10%
PRTIM3	1.8%	10%
PRTIM2	4.3%	23%
PRTIM1	1.8%	10%
PRTIM0	1.5%	8.0%
PRSPI	3.3%	18%
PRADC	4.5%	24%

It is possible to calculate the typical current consumption based on the numbers from Table 32-1 on page 378 for other V_{CC} and frequency settings than listed in Table 32-2.

32.2.1.1 Example 1

Calculate the expected current consumption in idle mode with USART0, TIMER1, and TWI enabled at V_{CC} = 2.0V and F = 1MHz. From Table 32-2, third column, we see that we need to add 17% for the USART0, 24% for the TWI, and 10% for the TIMER1 module. Reading from Figure 32-6 on page 376, we find that the idle current consumption is ~0.15mA at V_{CC} = 2.0V and F = 1MHz. The total current consumption in idle mode with USART0, TIMER1, and TWI enabled, gives:

$$I_{CCtotal} \approx 0.15mA \bullet (1 + 0.17 + 0.24 + 0.10) \approx 0.227mA$$

32.3 Power-down Supply Current

Figure 32-11. Power-down Supply Current vs. V_{CC} (Watchdog Timer Disabled)

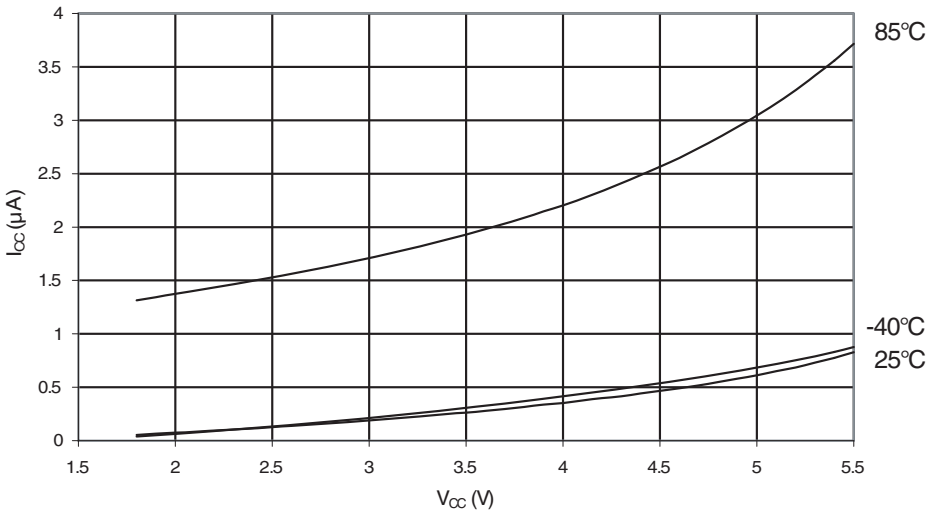

Figure 32-12. Power-down Supply Current vs. V_{CC} (Watchdog Timer Enabled)

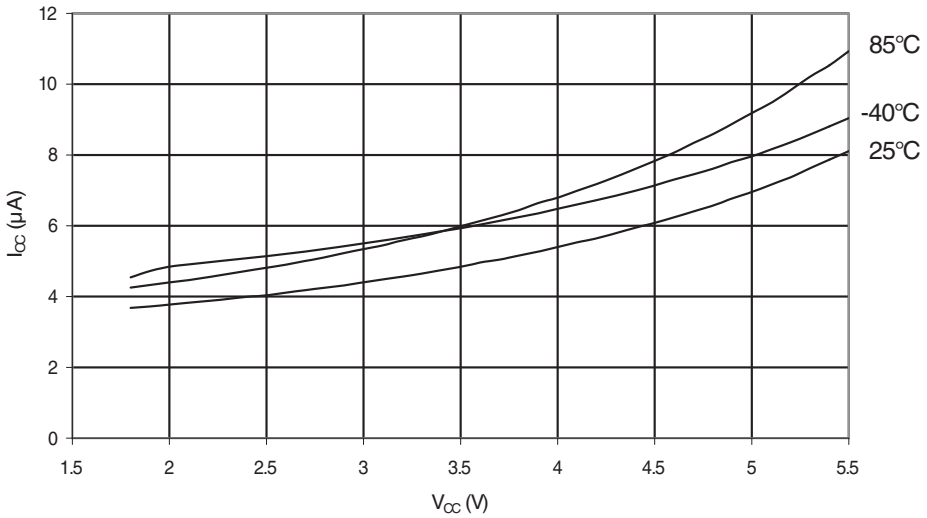

32.4 Power-save Supply Current

Figure 32-13. Power-save Supply Current vs. V_{CC} (Watchdog Timer Disabled)

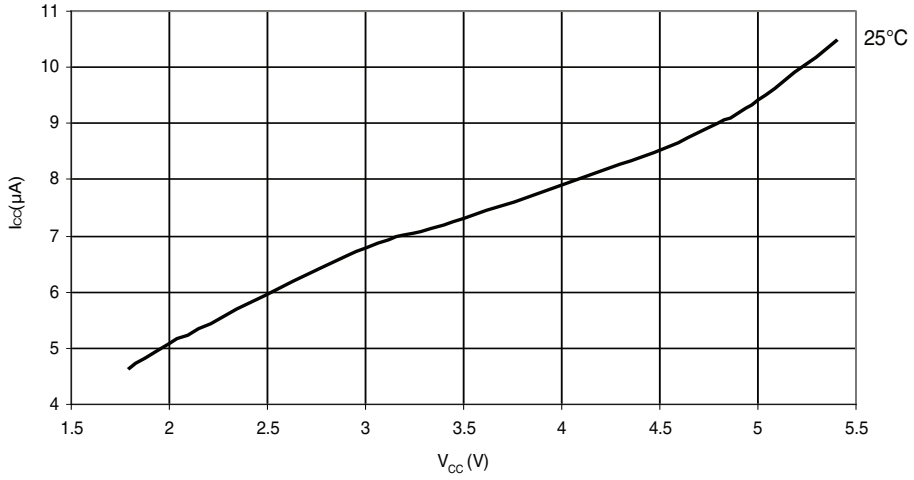

Figure 32-14. Power-save Supply Current vs. V_{CC} (Watchdog Timer Enabled)

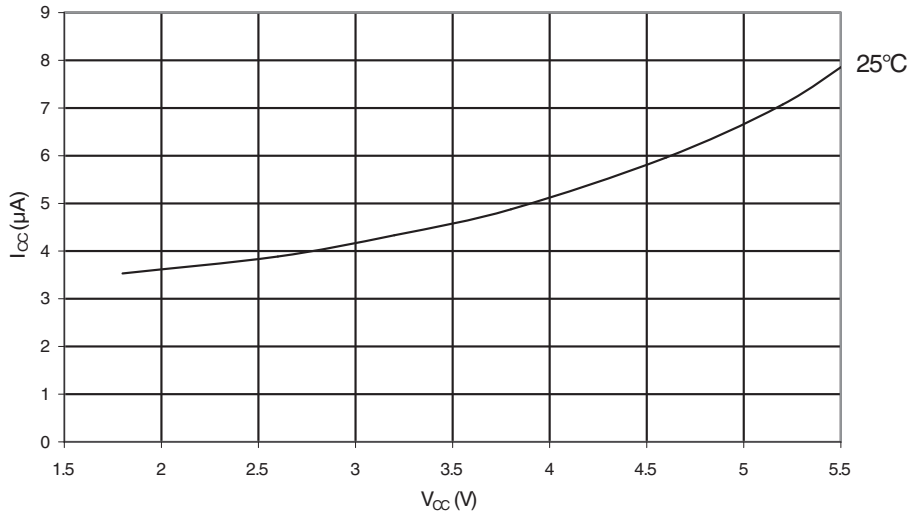

32.5 Standby Supply Current

Figure 32-15. Standby Supply Current vs. V_{CC} (Watchdog Timer Disabled)

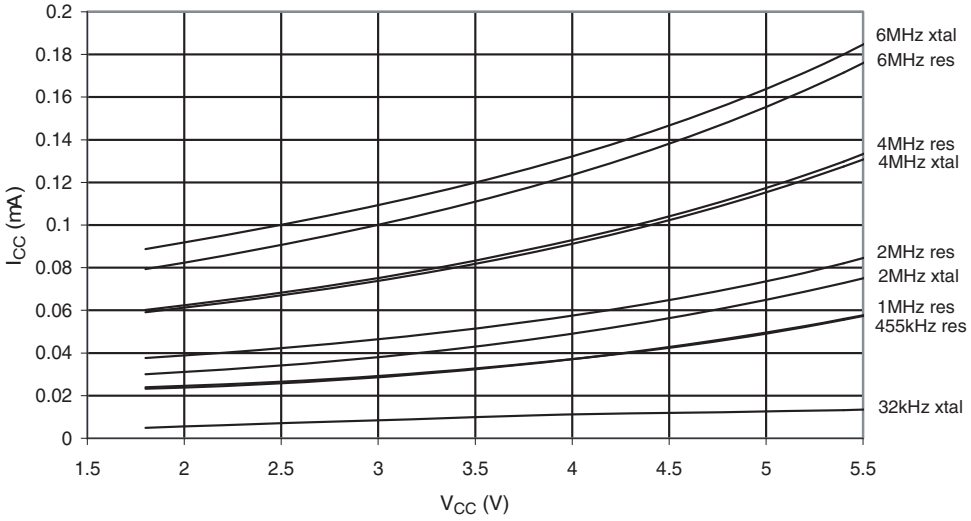

32.6 Pin Pull-up

Figure 32-16. I/O Pin Pull-up Resistor Current vs. Input Voltage (V_{CC} = 1.8V)

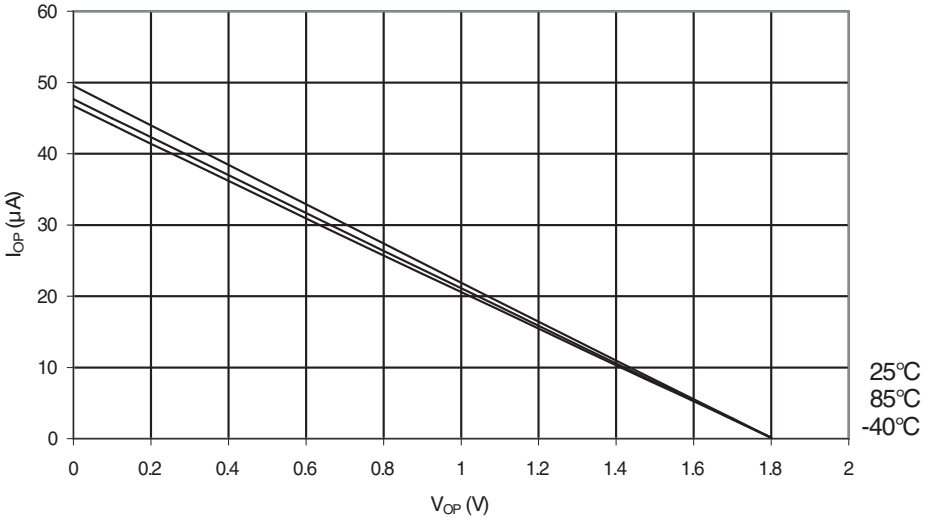

Figure 32-17. I/O Pin Pull-up Resistor Current vs. Input Voltage (V_{CC} = 2.7V)

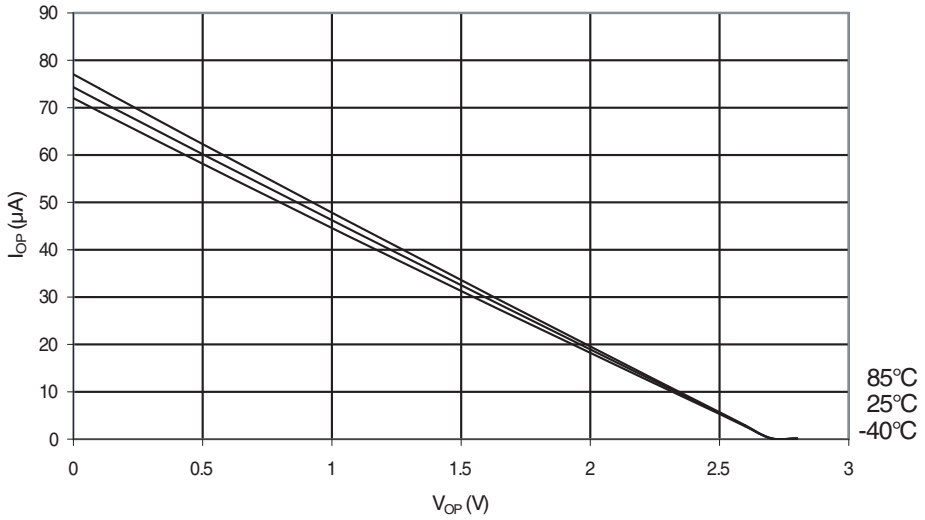

Figure 32-18. I/O Pin Pull-up Resistor Current vs. Input Voltage (V_{CC} = 5V)

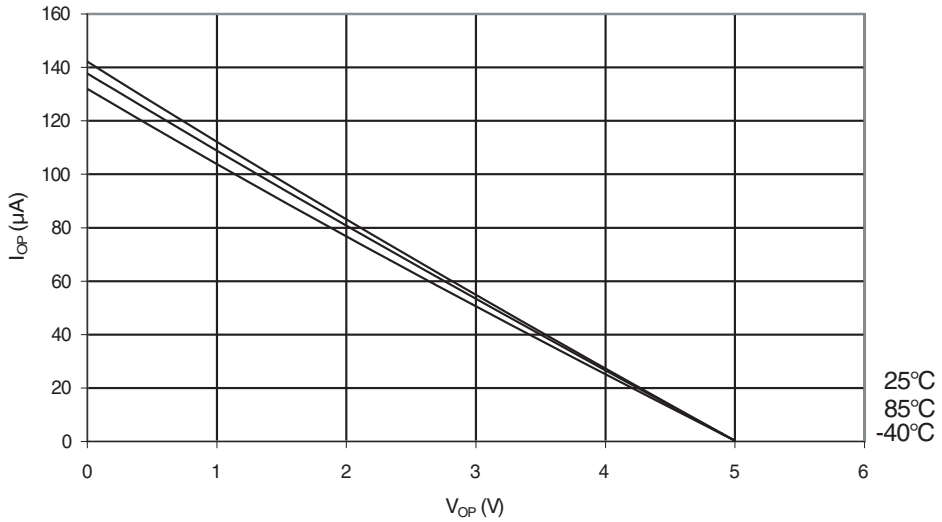

Figure 32-19. Reset Pull-up Resistor Current vs. Reset Pin Voltage (V_{CC} = 1.8V)

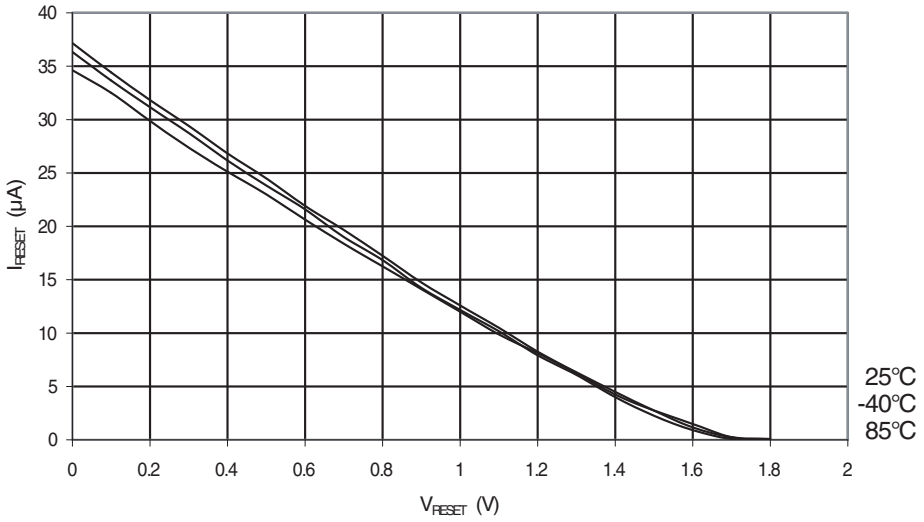

Figure 32-20. Reset pull-up Resistor Current vs. Reset Pin Voltage (V_{CC} = 2.7V)

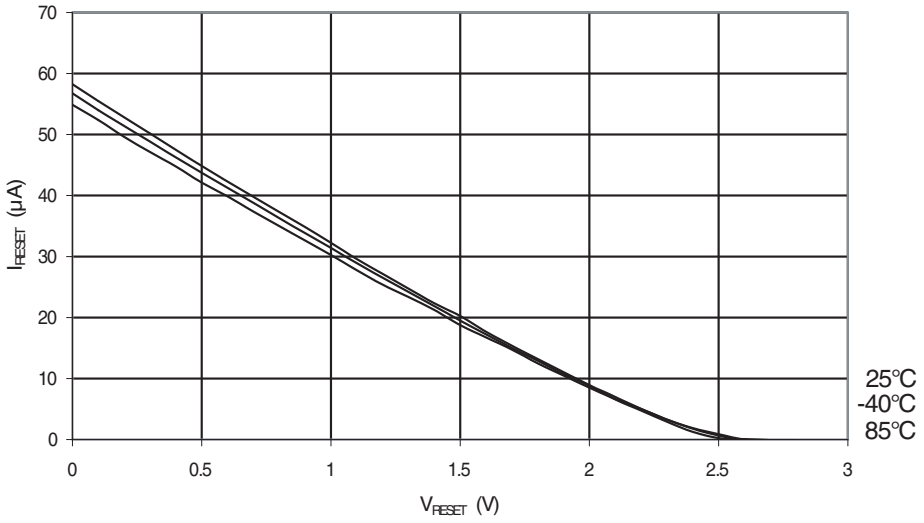

Figure 32-21. Reset Pull-up Resistor Current vs. Reset Pin Voltage (V_{CC} = 5V)

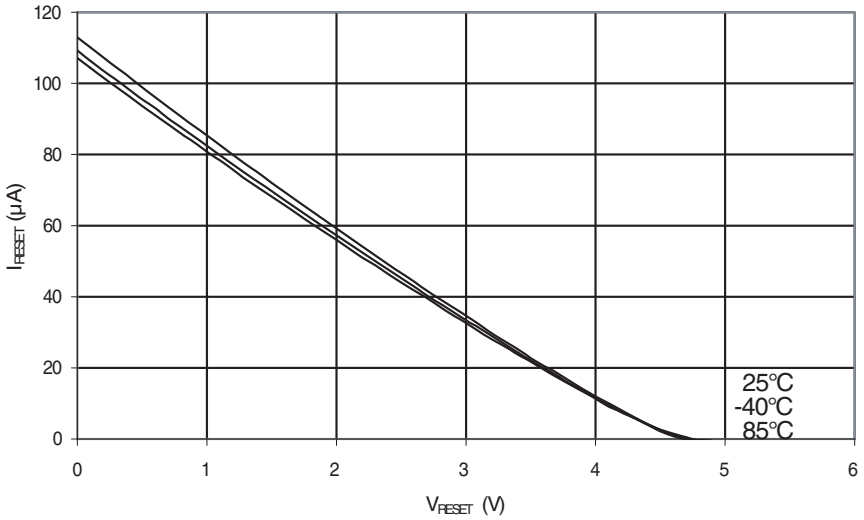

32.7 Pin Driver Strength

Figure 32-22. I/O Pin output Voltage vs.Sink Current (V_{CC} = 3V)

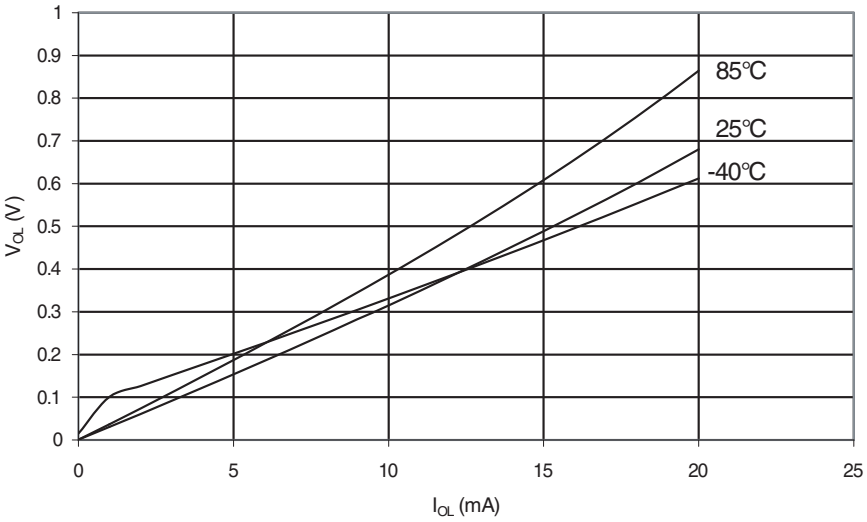

Figure 32-23. I/O Pin Output Voltage vs. Sink Current (V_{CC} = 5V)

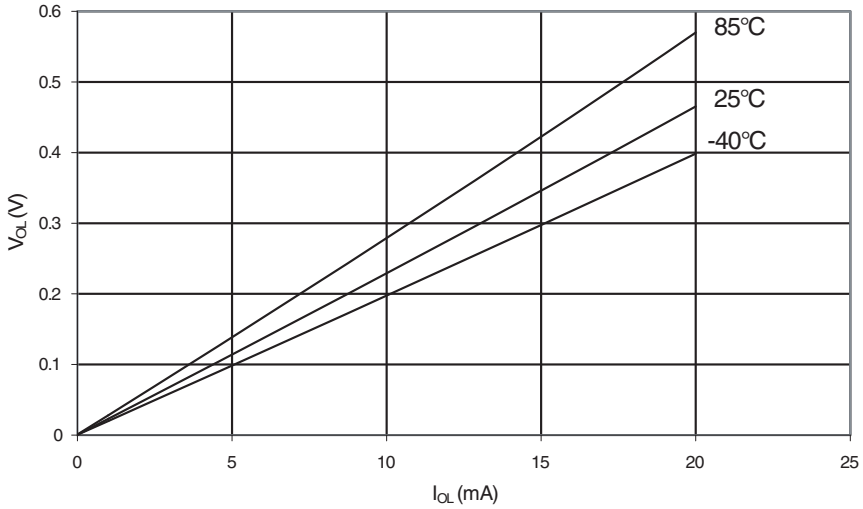

Figure 32-24. I/O Pin Output Voltage vs. Source Current (V_{CC} = 3V)

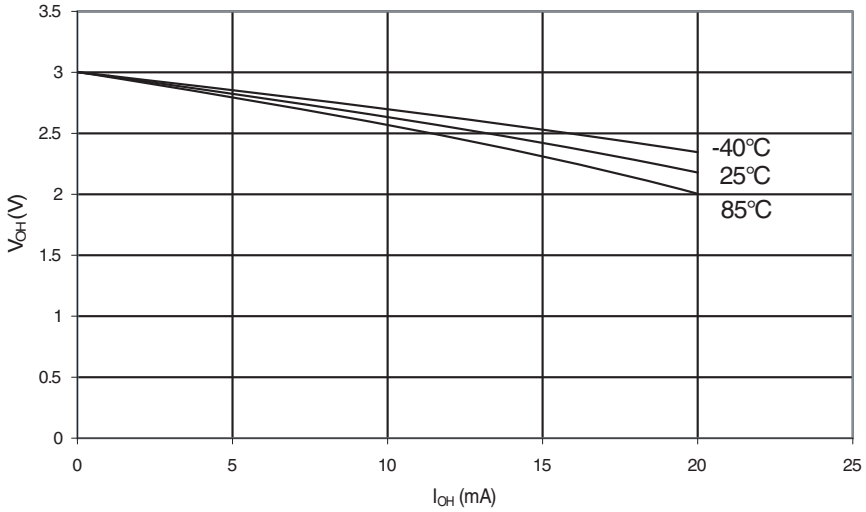

Figure 32-25. I/O Pin Output Voltage vs. Source Current (V_{CC} = 5V)

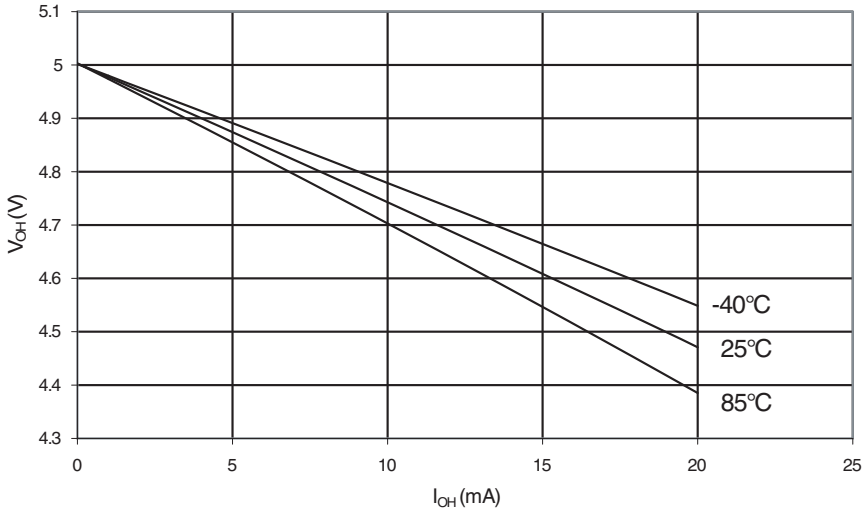

32.8 Pin Threshold and Hysteresis

Figure 32-26. I/O Pin Input Threshold Voltage vs. V_{CC} (V_{IH}, IO Pin Read as “1“)

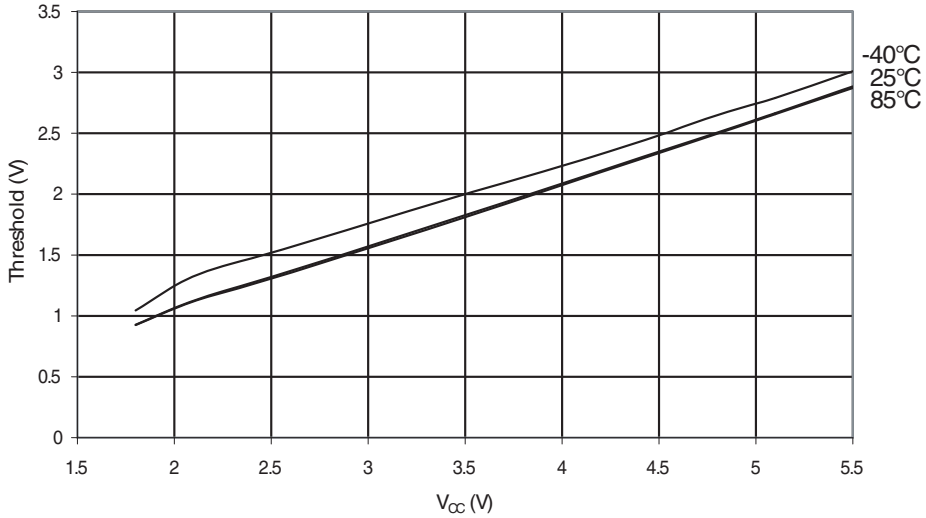

Figure 32-27. I/O Pin Input Threshold Voltage vs. V_{CC} (V_{IL}, IO Pin Read as “0“)

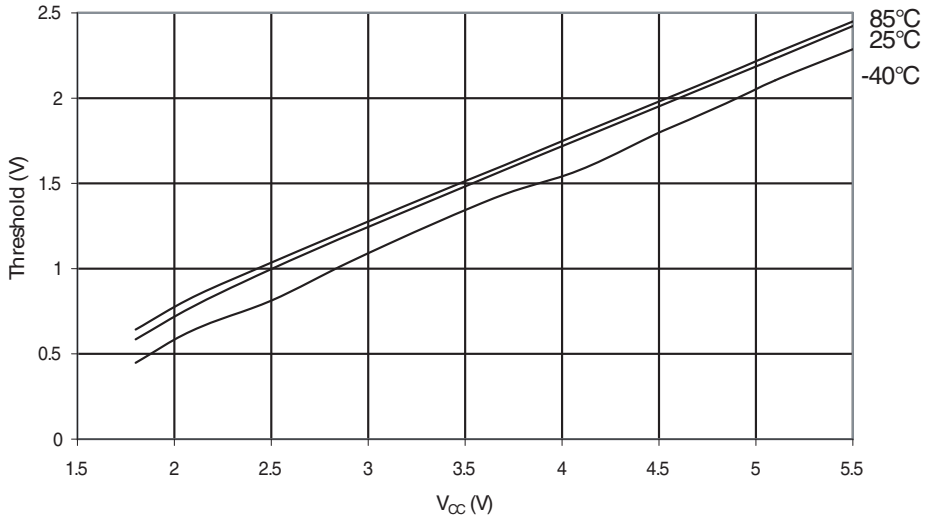

Figure 32-28. I/O Pin Input Hysteresis

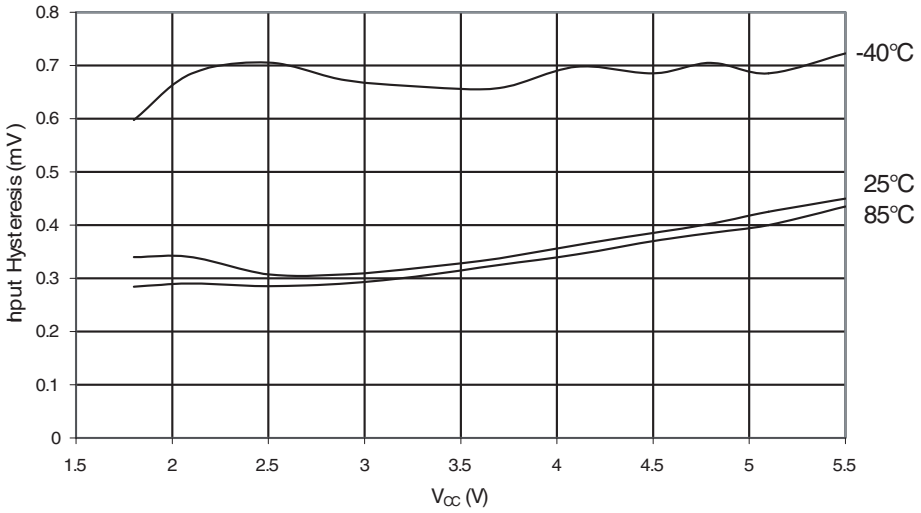

Figure 32-29. Reset Input Threshold Voltage vs. V_{CC} (V_{IH}, IO Pin Read as “1“)

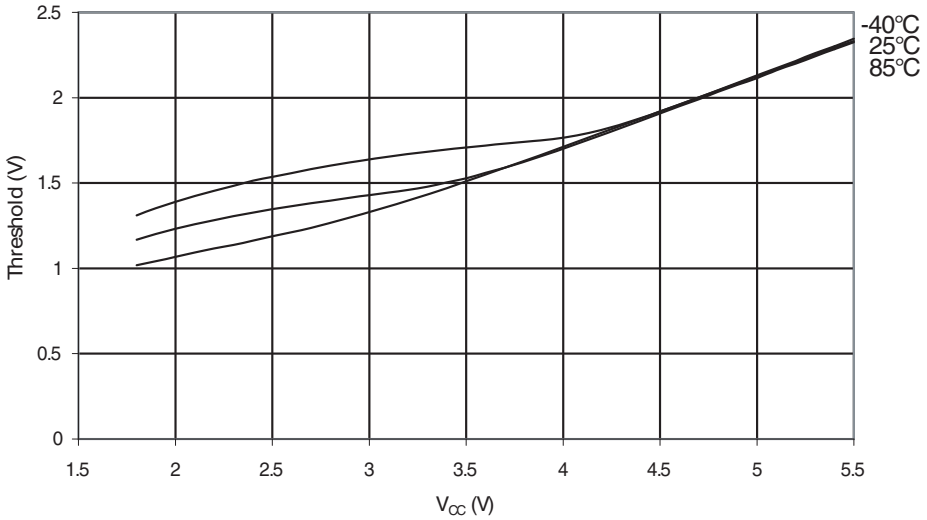

Figure 32-30. Reset Input Threshold Voltage vs. V_{CC} (V_{IL}, IO Pin Read as “0“)

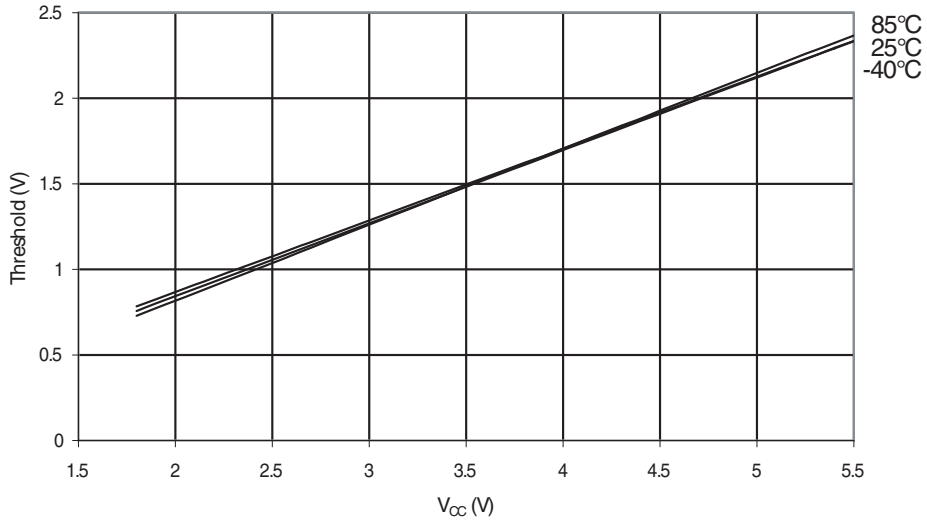

Figure 32-31. Reset Pin Input Hysteresis vs. V_{CC}

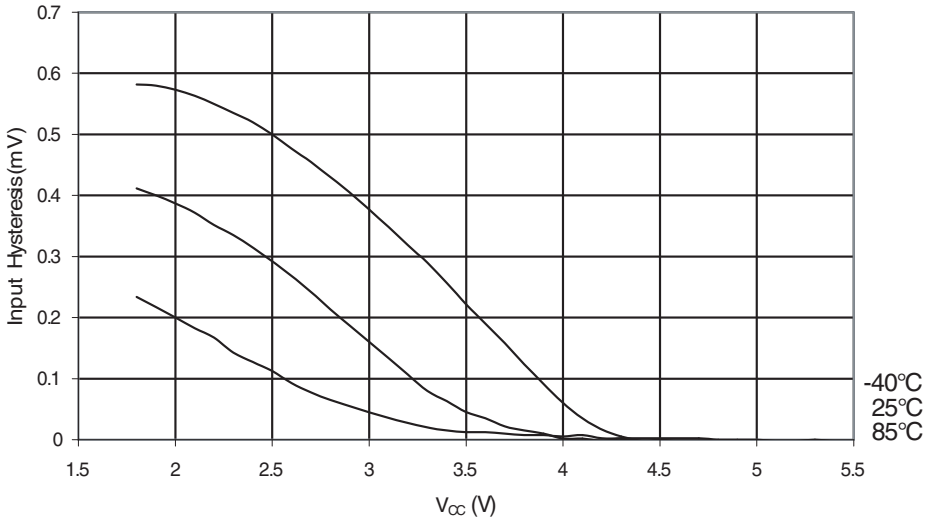

32.9 BOD Threshold and Analog Comparator Offset

Figure 32-32. BOD Threshold vs. Temperature (BOD Level is 4.3V)

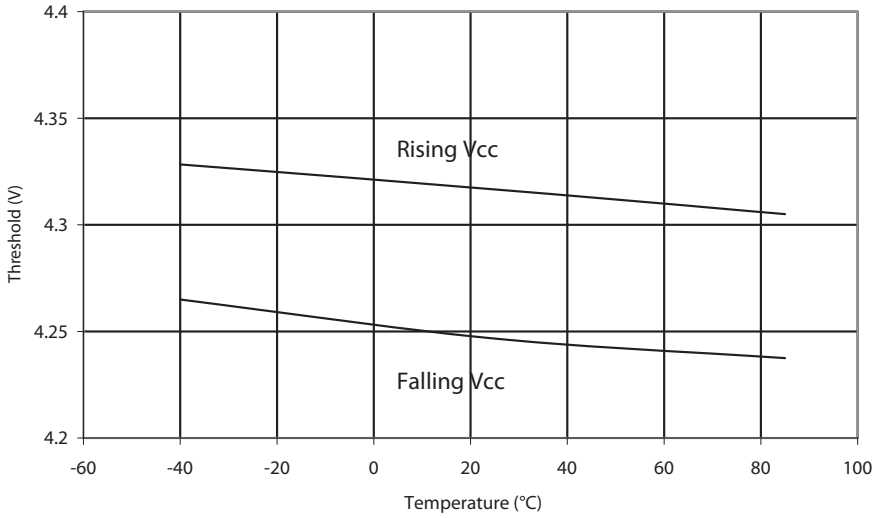

Figure 32-33. BOD Threshold vs. Temperature (BOD Level is 2.7V)

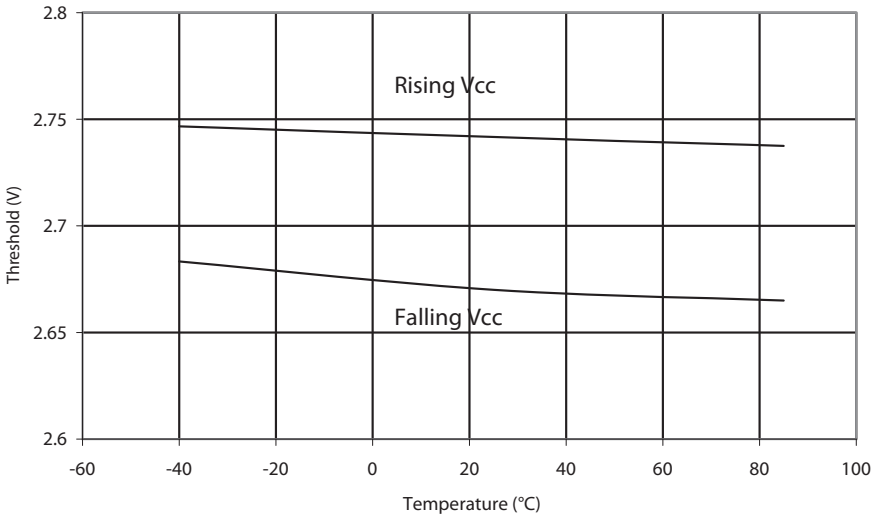

Figure 32-34. BOD Threshold vs. Temperature (BOD Level is 1.8V)

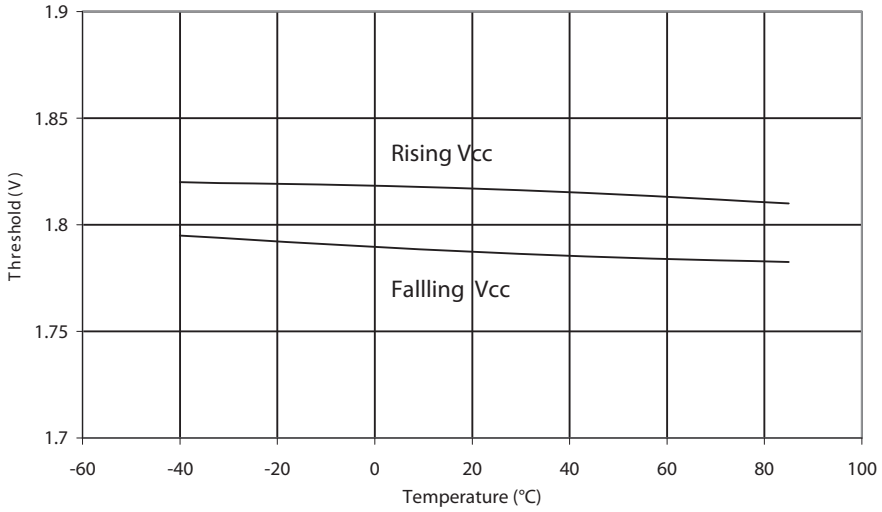

32.10 Internal Oscillator Speed

Figure 32-35. Watchdog Oscillator Frequency vs. V_{CC}

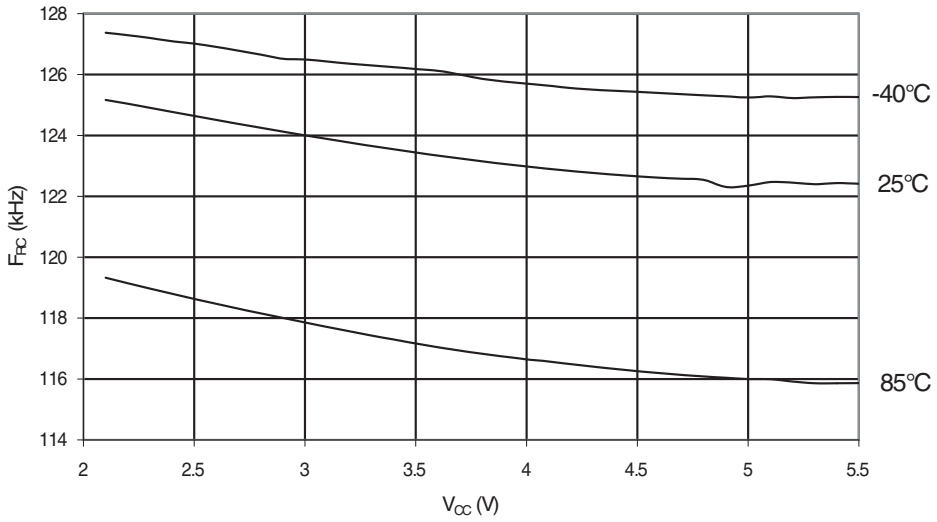

Figure 32-36. Watchdog Oscillator Frequency vs. Temperature

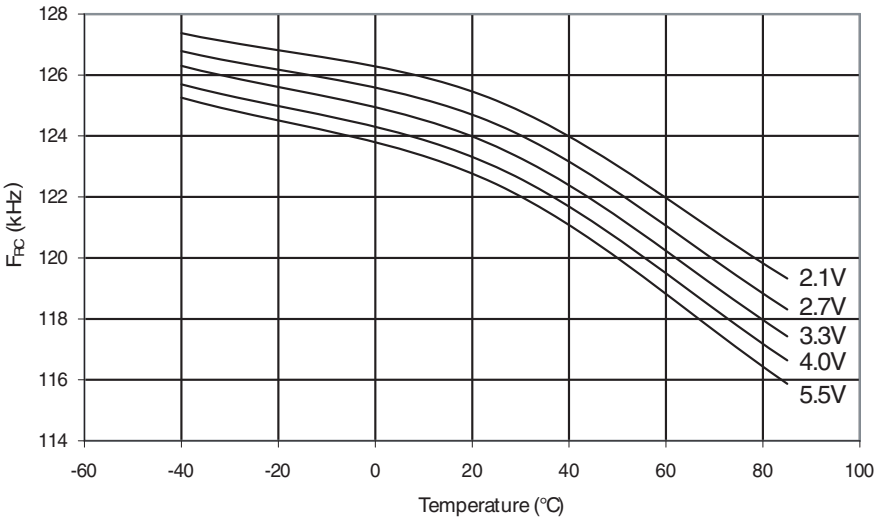

Figure 32-37. Calibrated 8MHz RC Oscillator Frequency vs. V_{CC}

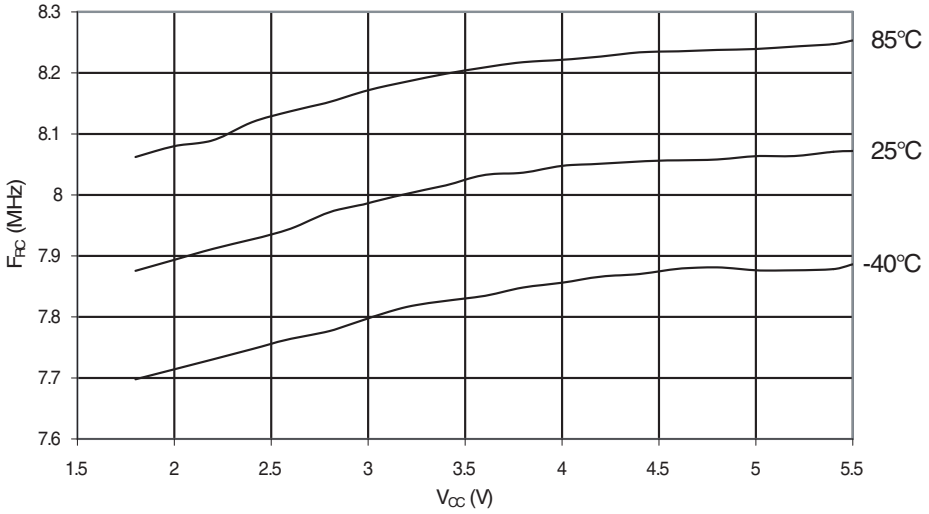

Figure 32-38. Calibrated 8MHz RC Oscillator Frequency vs. Temperature

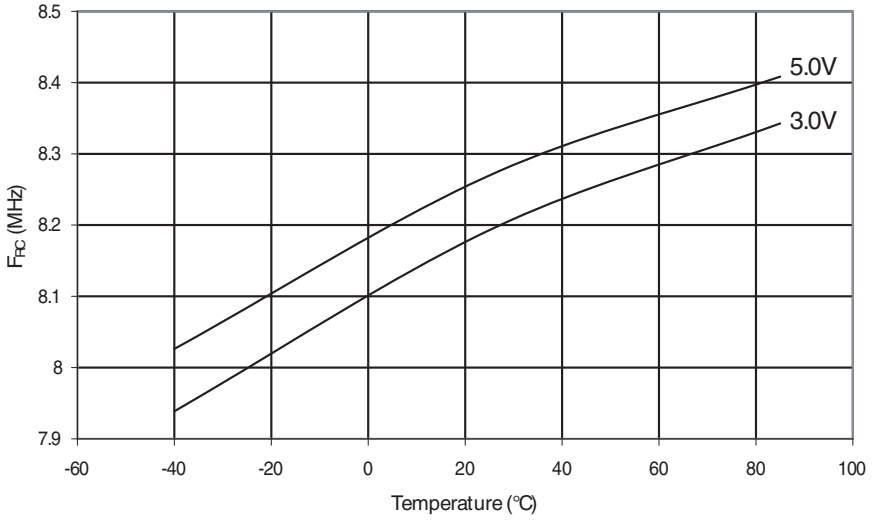

Figure 32-39. Calibrated 8MHz RC Oscillator Frequency vs. Osccal Value

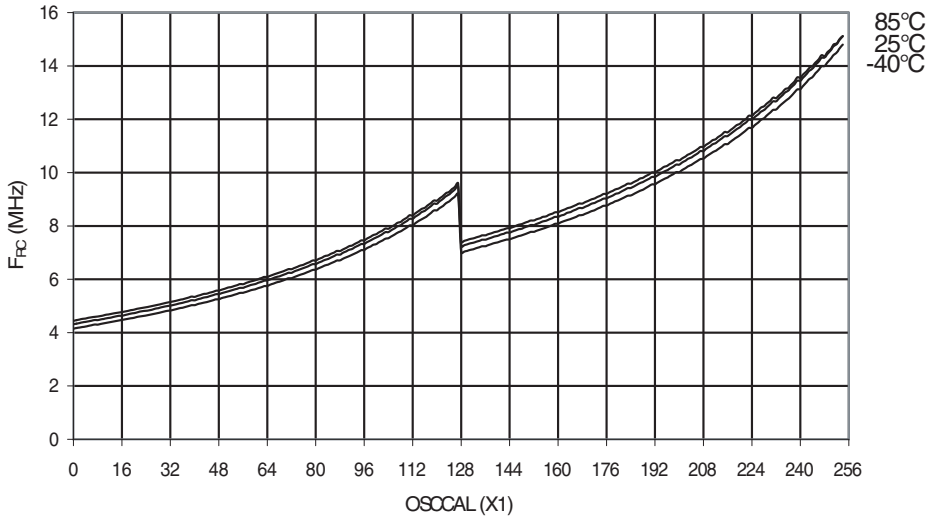

32.11 Current Consumption of Peripheral Units

Figure 32-40. Brownout Detector Current vs. V_{CC}

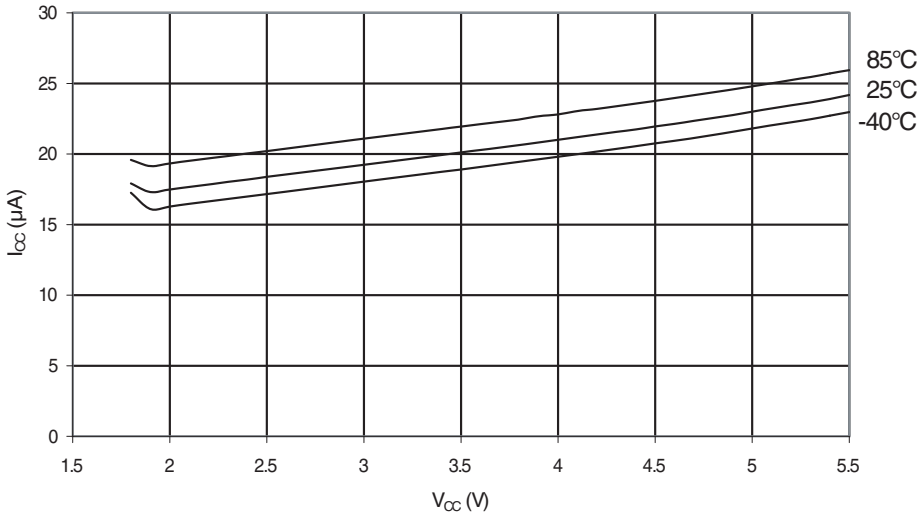

Figure 32-41. ADC Current vs. V_{CC} (AREF = AV_{CC})

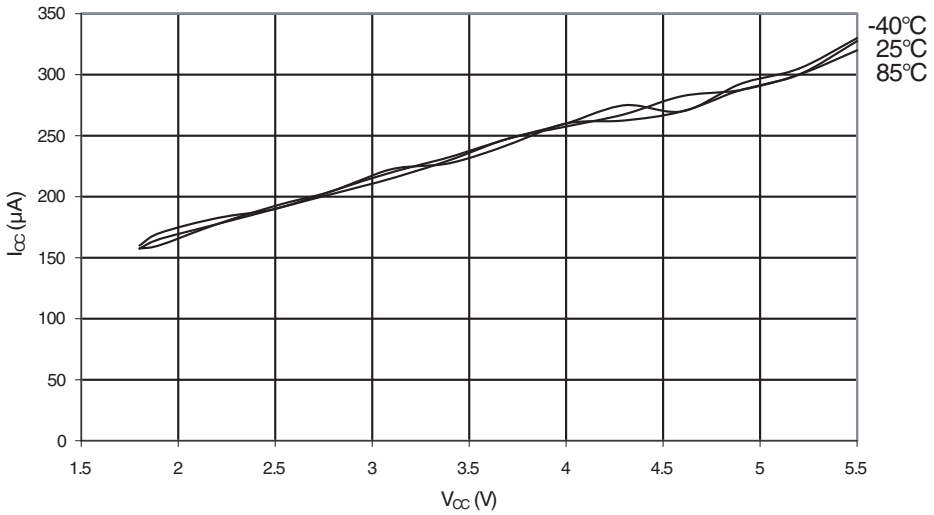

Figure 32-42. AREF External Reference Current vs. V_{CC}

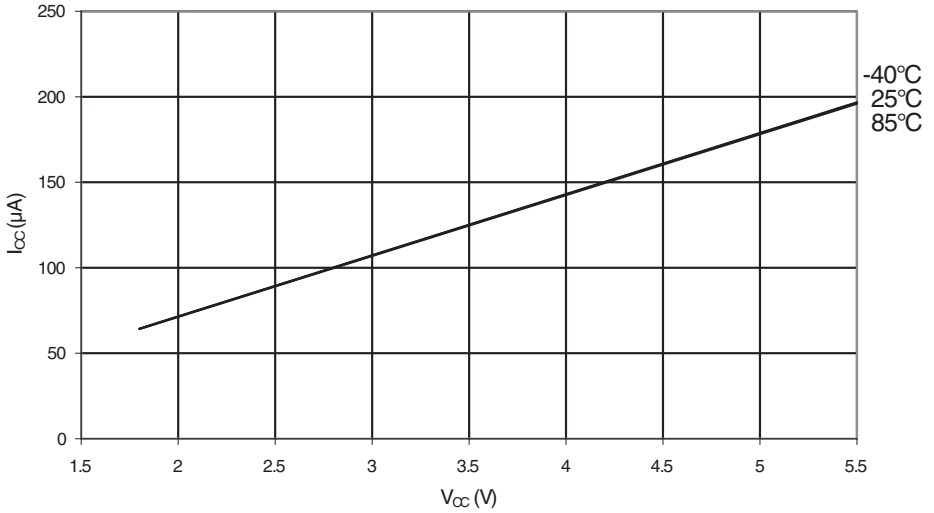

Figure 32-43. Watchdog Timer Current vs. V_{CC}

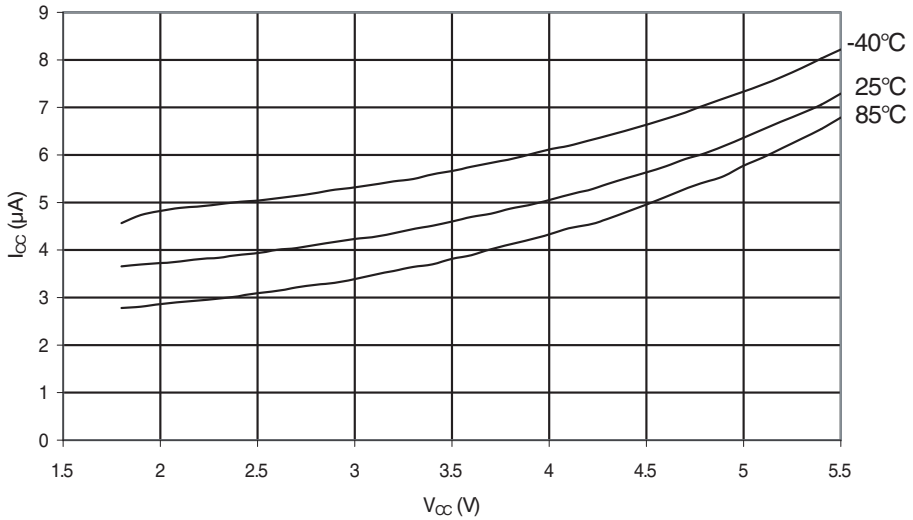

Figure 32-44. Analog Comparator Current vs. V_{CC}

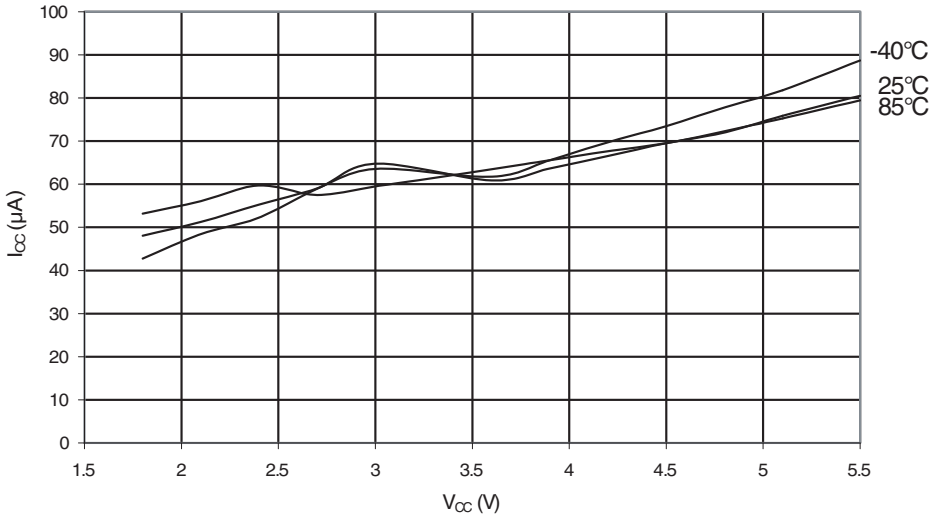

Figure 32-45. Programming Current vs. V_{CC}

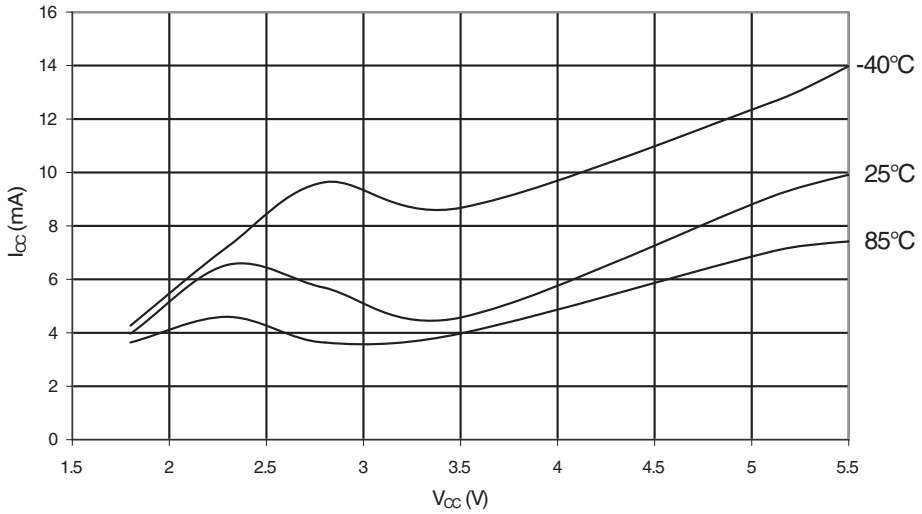

32.12 Current Consumption in Reset and Reset Pulsewidth

Figure 32-46. Reset Supply Current vs V_{CC} (0.1MHz - 1.0MHz, Excluding Current Through The Reset Pull-up)

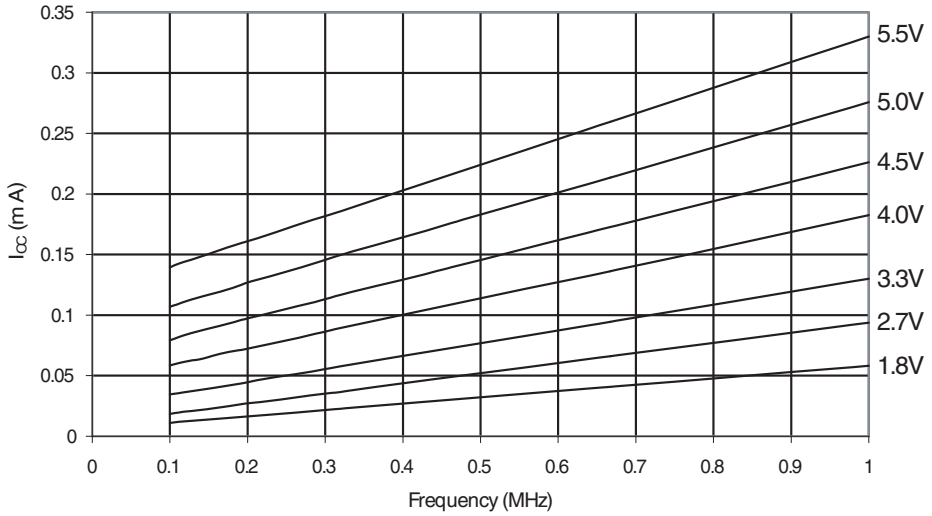

Figure 32-47. Reset Supply Current vs. V_{CC} (1MHz - 16MHz, Excluding Current Through The Reset Pull-up)

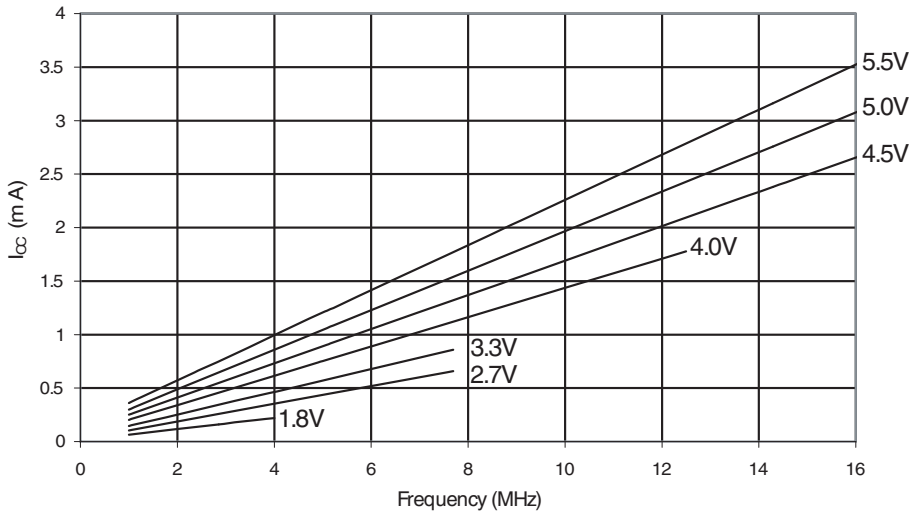

Figure 32-48. Minimum Reset Pulse Width vs. V_{CC}

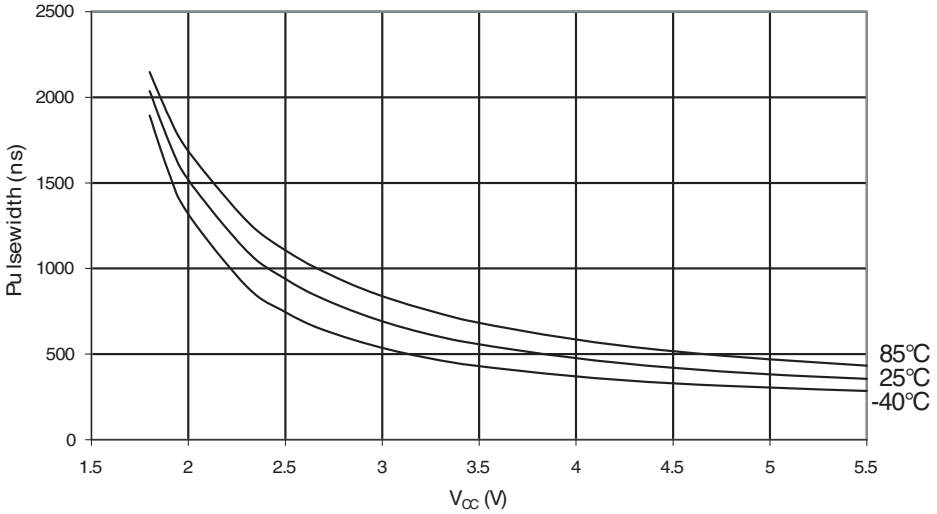

33. Register Summary

Address	Name	Bit 7	Bit 6	Bit 5	Bit 4	Bit 3	Bit 2	Bit 1	Bit 0	Page
(0x1FF)	Reserved	-	-	-	-	-	-	-	-	
...	Reserved	-	-	-	-	-	-	-	-	
(0x13F)	Reserved									
(0x13E)	Reserved									
(0x13D)	Reserved									
(0x13C)	Reserved									
(0x13B)	Reserved									
(0x13A)	Reserved									
(0x139)	Reserved									
(0x138)	Reserved									
(0x137)	Reserved									
(0x136)	UDR3	USART3 I/O Data Register								page 218
(0x135)	UBRR3H	-	-	-	-	USART3 Baud Rate Register High Byte				page 222
(0x134)	UBRR3L	USART3 Baud Rate Register Low Byte								page 222
(0x133)	Reserved	-	-	-	-	-	-	-	-	
(0x132)	UCSR3C	UMSEL31	UMSEL30	UPM31	UPM30	USBS3	UCSZ31	UCSZ30	UCPOL3	page 235
(0x131)	UCSR3B	RXCIE3	TXCIE3	UDRIE3	RXEN3	TXEN3	UCSZ32	RXB83	TXB83	page 234
(0x130)	UCSR3A	RXC3	TXC3	UDRE3	FE3	DOR3	UPE3	U2X3	MPCM3	page 233
(0x12F)	Reserved	-	-	-	-	-	-	-	-	
(0x12E)	Reserved	-	-	-	-	-	-	-	-	
(0x12D)	OCR5CH	Timer/Counter5 - Output Compare Register C High Byte								page 160
(0x12C)	OCR5CL	Timer/Counter5 - Output Compare Register C Low Byte								page 160
(0x12B)	OCR5BH	Timer/Counter5 - Output Compare Register B High Byte								page 160
(0x12A)	OCR5BL	Timer/Counter5 - Output Compare Register B Low Byte								page 160
(0x129)	OCR5AH	Timer/Counter5 - Output Compare Register A High Byte								page 160
(0x128)	OCR5AL	Timer/Counter5 - Output Compare Register A Low Byte								page 160
(0x127)	ICR5H	Timer/Counter5 - Input Capture Register High Byte								page 161
(0x126)	ICR5L	Timer/Counter5 - Input Capture Register Low Byte								page 161
(0x125)	TCNT5H	Timer/Counter5 - Counter Register High Byte								page 158
(0x124)	TCNT5L	Timer/Counter5 - Counter Register Low Byte								page 158
(0x123)	Reserved	-	-	-	-	-	-	-	-	
(0x122)	TCCR5C	FOC5A	FOC5B	FOC5C	-	-	-	-	-	page 157
(0x121)	TCCR5B	ICNC5	ICES5	-	WGM53	WGM52	CS52	CS51	CS50	page 156
(0x120)	TCCR5A	COM5A1	COM5A0	COM5B1	COM5B0	COM5C1	COM5C0	WGM51	WGM50	page 154
(0x11F)	Reserved	-	-	-	-	-	-	-	-	
(0x11E)	Reserved	-	-	-	-	-	-	-	-	
(0x11D)	Reserved	-	-	-	-	-	-	-	-	
(0x11C)	Reserved	-	-	-	-	-	-	-	-	
(0x11B)	Reserved	-	-	-	-	-	-	-	-	
(0x11A)	Reserved	-	-	-	-	-	-	-	-	
(0x119)	Reserved	-	-	-	-	-	-	-	-	
(0x118)	Reserved	-	-	-	-	-	-	-	-	
(0x117)	Reserved	-	-	-	-	-	-	-	-	
(0x116)	Reserved	-	-	-	-	-	-	-	-	
(0x115)	Reserved	-	-	-	-	-	-	-	-	
(0x114)	Reserved	-	-	-	-	-	-	-	-	
(0x113)	Reserved	-	-	-	-	-	-	-	-	
(0x112)	Reserved	-	-	-	-	-	-	-	-	
(0x111)	Reserved	-	-	-	-	-	-	-	-	
(0x110)	Reserved	-	-	-	-	-	-	-	-	
(0x10F)	Reserved	-	-	-	-	-	-	-	-	
(0x10E)	Reserved	-	-	-	-	-	-	-	-	
(0x10D)	Reserved	-	-	-	-	-	-	-	-	
(0x10C)	Reserved	-	-	-	-	-	-	-	-	
(0x10B)	PORTL	PORTL7	PORTL6	PORTL5	PORTL4	PORTL3	PORTL2	PORTL1	PORTL0	page 100
(0x10A)	DDRL	DDL7	DDL6	DDL5	DDL4	DDL3	DDL2	DDL1	DDL0	page 100
(0x109)	PINL	PINL7	PINL6	PINL5	PINL4	PINL3	PINL2	PINL1	PINL0	page 100
(0x108)	PORTK	PORTK7	PORTK6	PORTK5	PORTK4	PORTK3	PORTK2	PORTK1	PORTK0	page 99
(0x107)	DDRK	DDK7	DDK6	DDK5	DDK4	DDK3	DDK2	DDK1	DDK0	page 99
(0x106)	PINK	PINK7	PINK6	PINK5	PINK4	PINK3	PINK2	PINK1	PINK0	page 99
(0x105)	PORTJ	PORTJ7	PORTJ6	PORTJ5	PORTJ4	PORTJ3	PORTJ2	PORTJ1	PORTJ0	page 99
(0x104)	DDRJ	DDJ7	DDJ6	DDJ5	DDJ4	DDJ3	DDJ2	DDJ1	DDJ0	page 99
(0x103)	PINJ	PINJ7	PINJ6	PINJ5	PINJ4	PINJ3	PINJ2	PINJ1	PINJ0	page 99
(0x102)	PORTH	PORTH7	PORTH6	PORTH5	PORTH4	PORTH3	PORTH2	PORTH1	PORTH0	page 98
(0x101)	DDRH	DDH7	DDH6	DDH5	DDH4	DDH3	DDH2	DDH1	DDH0	page 99

Address	Name	Bit 7	Bit 6	Bit 5	Bit 4	Bit 3	Bit 2	Bit 1	Bit 0	Page
(0x100)	PINH	PINH7	PINH6	PINH5	PINH4	PINH3	PINH2	PINH1	PINH0	page 99
(0xFF)	Reserved	-	-	-	-	-	-	-	-	
(0xFE)	Reserved	-	-	-	-	-	-	-	-	
(0xFD)	Reserved	-	-	-	-	-	-	-	-	
(0xFC)	Reserved	-	-	-	-	-	-	-	-	
(0xFB)	Reserved	-	-	-	-	-	-	-	-	
(0xFA)	Reserved	-	-	-	-	-	-	-	-	
(0xF9)	Reserved	-	-	-	-	-	-	-	-	
(0xF8)	Reserved	-	-	-	-	-	-	-	-	
(0xF7)	Reserved	-	-	-	-	-	-	-	-	
(0xF6)	Reserved	-	-	-	-	-	-	-	-	
(0xF5)	Reserved	-	-	-	-	-	-	-	-	
(0xF4)	Reserved	-	-	-	-	-	-	-	-	
(0xF3)	Reserved	-	-	-	-	-	-	-	-	
(0xF2)	Reserved	-	-	-	-	-	-	-	-	
(0xF1)	Reserved	-	-	-	-	-	-	-	-	
(0xF0)	Reserved	-	-	-	-	-	-	-	-	
(0xEF)	Reserved	-	-	-	-	-	-	-	-	
(0xEE)	Reserved	-	-	-	-	-	-	-	-	
(0xED)	Reserved	-	-	-	-	-	-	-	-	
(0xEC)	Reserved	-	-	-	-	-	-	-	-	
(0xEB)	Reserved	-	-	-	-		-	-	-	
(0xEA)	Reserved	-	-	-	-	-	-	-	-	
(0xE9)	Reserved	-	-	-	-	-	-	-	-	
(0xE8)	Reserved	-	-	-	-	-	-	-	-	
(0xE7)	Reserved	-	-	-	-		-	-	-	
(0xE6)	Reserved	-	-	-	-	-	-	-	-	
(0xE5)	Reserved	-	-	-	-	-	-	-	-	
(0xE4)	Reserved	-	-	-	-	-	-	-	-	
(0xE3)	Reserved	-	-	-	-		-	-	-	
(0xE2)	Reserved	-	-	-	-	-	-	-	-	
(0xE1)	Reserved	-	-	-	-		-	-	-	
(0xE0)	Reserved	-	-	-	-		-	-	-	
(0xDF)	Reserved	-	-	-	-	-	-	-	-	
(0xDE)	Reserved	-	-	-	-	-	-	-	-	
(0xDD)	Reserved	-	-	-	-		-	-	-	
(0xDC)	Reserved	-	-	-	-	-	-	-	-	
(0xDB)	Reserved	-	-	-	-	-	-	-	-	
(0xDA)	Reserved	-	-	-	-	-	-	-	-	
(0xD9)	Reserved	-	-	-	-		-	-	-	
(0xD8)	Reserved	-	-	-	-	-	-	-	-	
(0xD7)	Reserved	-	-	-	-	-	-	-	-	
(0xD6)	UDR2	USART2 I/O Data Register								page 218
(0xD5)	UBRR2H	-	-	-	-	USART2 Baud Rate Register High Byte				page 222
(0xD4)	UBRR2L	USART2 Baud Rate Register Low Byte								page 222
(0xD3)	Reserved	-	-	-	-	-	-	-	-	
(0xD2)	UCSR2C	UMSEL21	UMSEL20	UPM21	UPM20	USBS2	UCSZ21	UCSZ20	UCPOL2	page 235
(0xD1)	UCSR2B	RXCIE2	TXCIE2	UDRIE2	RXEN2	TXEN2	UCSZ22	RXB82	TXB82	page 234
(0xD0)	UCSR2A	RXC2	TXC2	UDRE2	FE2	DOR2	UPE2	U2X2	MPCM2	page 233
(0xCF)	Reserved	-	-	-	-	-	-	-	-	
(0xCE)	UDR1	USART1 I/O Data Register								page 218
(0xCD)	UBRR1H	-	-	-	-	USART1 Baud Rate Register High Byte				page 222
(0xCC)	UBRR1L	USART1 Baud Rate Register Low Byte								page 222
(0xCB)	Reserved	-	-	-	-	-	-	-	-	
(0xCA)	UCSR1C	UMSEL11	UMSEL10	UPM11	UPM10	USBS1	UCSZ11	UCSZ10	UCPOL1	page 235
(0xC9)	UCSR1B	RXCIE1	TXCIE1	UDRIE1	RXEN1	TXEN1	UCSZ12	RXB81	TXB81	page 234
(0xC8)	UCSR1A	RXC1	TXC1	UDRE1	FE1	DOR1	UPE1	U2X1	MPCM1	page 233
(0xC7)	Reserved	-	-	-	-	-	-	-	-	
(0xC6)	UDR0	USART0 I/O Data Register								page 218
(0xC5)	UBRR0H	-	-	-	-	USART0 Baud Rate Register High Byte				page 222
(0xC4)	UBRR0L	USART0 Baud Rate Register Low Byte								page 222
(0xC3)	Reserved	-	-	-	-	-	-	-	-	
(0xC2)	UCSR0C	UMSEL01	UMSEL00	UPM01	UPM00	USBS0	UCSZ01	UCSZ00	UCPOL0	page 235
(0xC1)	UCSR0B	RXCIE0	TXCIE0	UDRIE0	RXEN0	TXEN0	UCSZ02	RXB80	TXB80	page 234
(0xC0)	UCSR0A	RXC0	TXC0	UDRE0	FE0	DOR0	UPE0	U2X0	MPCM0	page 234
(0xBF)	Reserved	-	-	-	-	-	-	-	-	
(0xBE)	Reserved	-	-	-	-	-	-	-	-	
(0xBD)	TWAMR	TWAM6	TWAM5	TWAM4	TWAM3	TWAM2	TWAM1	TWAM0	-	page 264

Address	Name	Bit 7	Bit 6	Bit 5	Bit 4	Bit 3	Bit 2	Bit 1	Bit 0	Page
(0xBC)	TWCR	TWINT	TWEA	TWSTA	TWSTO	TWWC	TWEN	-	TWIE	page 261
(0xBB)	TWDR	2-wire Serial Interface Data Register								page 263
(0xBA)	TWAR	TWA6	TWA5	TWA4	TWA3	TWA2	TWA1	TWA0	TWGCE	page 263
(0xB9)	TWSR	TWS7	TWS6	TWS5	TWS4	TWS3	-	TWPS1	TWPS0	page 262
(0xB8)	TWBR	2-wire Serial Interface Bit Rate Register								page 261
(0xB7)	Reserved	-	-	-	-	-	-	-	-	
(0xB6)	ASSR	-	EXCLK	AS2	TCN2UB	OCR2AUB	OCR2BUB	TCR2AUB	TCR2BUB	page 179
(0xB5)	Reserved	-	-	-	-	-	-	-	-	
(0xB4)	OCR2B	Timer/Counter2 Output Compare Register B								page 186
(0xB3)	OCR2A	Timer/Counter2 Output Compare Register A								page 186
(0xB2)	TCNT2	Timer/Counter2 (8 Bit)								page 186
(0xB1)	TCCR2B	FOC2A	FOC2B	-	-	WGM22	CS22	CS21	CS20	page 185
(0xB0)	TCCR2A	COM2A1	COM2A0	COM2B1	COM2B0	-	-	WGM21	WGM20	page 186
(0xAF)	Reserved	-	-	-	-	-	-	-	-	
(0xAE)	Reserved	-	-	-	-	-	-	-	-	
(0xAD)	OCR4CH	Timer/Counter4 - Output Compare Register C High Byte								page 160
(0xAC)	OCR4CL	Timer/Counter4 - Output Compare Register C Low Byte								page 160
(0xAB)	OCR4BH	Timer/Counter4 - Output Compare Register B High Byte								page 160
(0xAA)	OCR4BL	Timer/Counter4 - Output Compare Register B Low Byte								page 160
(0xA9)	OCR4AH	Timer/Counter4 - Output Compare Register A High Byte								page 159
(0xA8)	OCR4AL	Timer/Counter4 - Output Compare Register A Low Byte								page 159
(0xA7)	ICR4H	Timer/Counter4 - Input Capture Register High Byte								page 161
(0xA6)	ICR4L	Timer/Counter4 - Input Capture Register Low Byte								page 161
(0xA5)	TCNT4H	Timer/Counter4 - Counter Register High Byte								page 158
(0xA4)	TCNT4L	Timer/Counter4 - Counter Register Low Byte								page 158
(0xA3)	Reserved	-	-	-	-	-	-	-	-	
(0xA2)	TCCR4C	FOC4A	FOC4B	FOC4C	-	-	-	-	-	page 157
(0xA1)	TCCR4B	ICNC4	ICES4	-	WGM43	WGM42	CS42	CS41	CS40	page 156
(0xA0)	TCCR4A	COM4A1	COM4A0	COM4B1	COM4B0	COM4C1	COM4C0	WGM41	WGM40	page 154
(0x9F)	Reserved	-	-	-	-	-	-	-	-	
(0x9E)	Reserved	-	-	-	-	-	-	-	-	
(0x9D)	OCR3CH	Timer/Counter3 - Output Compare Register C High Byte								page 159
(0x9C)	OCR3CL	Timer/Counter3 - Output Compare Register C Low Byte								page 159
(0x9B)	OCR3BH	Timer/Counter3 - Output Compare Register B High Byte								page 159
(0x9A)	OCR3BL	Timer/Counter3 - Output Compare Register B Low Byte								page 159
(0x99)	OCR3AH	Timer/Counter3 - Output Compare Register A High Byte								page 159
(0x98)	OCR3AL	Timer/Counter3 - Output Compare Register A Low Byte								page 159
(0x97)	ICR3H	Timer/Counter3 - Input Capture Register High Byte								page 161
(0x96)	ICR3L	Timer/Counter3 - Input Capture Register Low Byte								page 161
(0x95)	TCNT3H	Timer/Counter3 - Counter Register High Byte								page 158
(0x94)	TCNT3L	Timer/Counter3 - Counter Register Low Byte								page 158
(0x93)	Reserved	-	-	-	-	-	-	-	-	
(0x92)	TCCR3C	FOC3A	FOC3B	FOC3C	-	-	-	-	-	page 157
(0x91)	TCCR3B	ICNC3	ICES3	-	WGM33	WGM32	CS32	CS31	CS30	page 156
(0x90)	TCCR3A	COM3A1	COM3A0	COM3B1	COM3B0	COM3C1	COM3C0	WGM31	WGM30	page 154
(0x8F)	Reserved	-	-	-	-	-	-	-	-	
(0x8E)	Reserved	-	-	-	-	-	-	-	-	
(0x8D)	OCR1CH	Timer/Counter1 - Output Compare Register C High Byte								page 159
(0x8C)	OCR1CL	Timer/Counter1 - Output Compare Register C Low Byte								page 159
(0x8B)	OCR1BH	Timer/Counter1 - Output Compare Register B High Byte								page 159
(0x8A)	OCR1BL	Timer/Counter1 - Output Compare Register B Low Byte								page 159
(0x89)	OCR1AH	Timer/Counter1 - Output Compare Register A High Byte								page 159
(0x88)	OCR1AL	Timer/Counter1 - Output Compare Register A Low Byte								page 159
(0x87)	ICR1H	Timer/Counter1 - Input Capture Register High Byte								page 160
(0x86)	ICR1L	Timer/Counter1 - Input Capture Register Low Byte								page 160
(0x85)	TCNT1H	Timer/Counter1 - Counter Register High Byte								page 158
(0x84)	TCNT1L	Timer/Counter1 - Counter Register Low Byte								page 158
(0x83)	Reserved	-	-	-	-	-	-	-	-	
(0x82)	TCCR1C	FOC1A	FOC1B	FOC1C	-	-	-	-	-	page 157
(0x81)	TCCR1B	ICNC1	ICES1	-	WGM13	WGM12	CS12	CS11	CS10	page 156
(0x80)	TCCR1A	COM1A1	COM1A0	COM1B1	COM1B0	COM1C1	COM1C0	WGM11	WGM10	page 154
(0x7F)	DIDR1	-	-	-	-	-	-	AIN1D	AIN0D	page 267
(0x7E)	DIDR0	ADC7D	ADC6D	ADC5D	ADC4D	ADC3D	ADC2D	ADC1D	ADC0D	page 287
(0x7D)	DIDR2	ADC15D	ADC14D	ADC13D	ADC12D	ADC11D	ADC10D	ADC9D	ADC8D	page 288
(0x7C)	ADMUX	REFS1	REFS0	ADLAR	MUX4	MUX3	MUX2	MUX1	MUX0	page 281
(0x7B)	ADCSRB	-	ACME	-	-	MUX5	ADTS2	ADTS1	ADTS0	page 266, 282, 287
(0x7A)	ADCSRA	ADEN	ADSC	ADATE	ADIF	ADIE	ADPS2	ADPS1	ADPS0	page 285
(0x79)	ADCH	ADC Data Register High byte								page 286

Address	Name	Bit 7	Bit 6	Bit 5	Bit 4	Bit 3	Bit 2	Bit 1	Bit 0	Page
(0x78)	ADCL	ADC Data Register Low byte								page 286
(0x77)	Reserved	-	-	-	-	-	-	-	-	
(0x76)	Reserved	-	-	-	-	-	-	-	-	
(0x75)	XMCRB	XMBK	-	-	-	-	XMM2	XMM1	XMM0	page 38
(0x74)	XMCRA	SRE	SRL2	SRL1	SRL0	SRW11	SRW10	SRW01	SRW00	page 36
(0x73)	TIMSK5	-	-	ICIE5	-	OCIE5C	OCIE5B	OCIE5A	TOIE5	page 162
(0x72)	TIMSK4	-	-	ICIE4	-	OCIE4C	OCIE4B	OCIE4A	TOIE4	page 161
(0x71)	TIMSK3	-	-	ICIE3	-	OCIE3C	OCIE3B	OCIE3A	TOIE3	page 161
(0x70)	TIMSK2	-	-	-	-	-	OCIE2B	OCIE2A	TOIE2	page 188
(0x6F)	TIMSK1	-	-	ICIE1	-	OCIE1C	OCIE1B	OCIE1A	TOIE1	page 161
(0x6E)	TIMSK0	-	-	-	-	-	OCIE0B	OCIE0A	TOIE0	page 131
(0x6D)	PCMSK2	PCINT23	PCINT22	PCINT21	PCINT20	PCINT19	PCINT18	PCINT17	PCINT16	page 113
(0x6C)	PCMSK1	PCINT15	PCINT14	PCINT13	PCINT12	PCINT11	PCINT10	PCINT9	PCINT8	page 113
(0x6B)	PCMSK0	PCINT7	PCINT6	PCINT5	PCINT4	PCINT3	PCINT2	PCINT1	PCINT0	page 114
(0x6A)	EICRB	ISC71	ISC70	ISC61	ISC60	ISC51	ISC50	ISC41	ISC40	page 110
(0x69)	EICRA	ISC31	ISC30	ISC21	ISC20	ISC11	ISC10	ISC01	ISC00	page 110
(0x68)	PCICR	-	-	-	-	-	PCIE2	PCIE1	PCIE0	page 112
(0x67)	Reserved	-	-	-	-	-	-	-	-	
(0x66)	OSCCAL	Oscillator Calibration Register								page 48
(0x65)	PRR1	-	-	PRTIM5	PRTIM4	PRTIM3	PRUSART3	PRUSART2	PRUSART1	page 56
(0x64)	PRR0	PRTWI	PRTIM2	PRTIM0	-	PRTIM1	PRSPI	PRUSART0	PRADC	page 55
(0x63)	Reserved	-	-	-	-	-	-	-	-	
(0x62)	Reserved	-	-	-	-	-	-	-	-	
(0x61)	CLKPR	CLKPCE	-	-	-	CLKPS3	CLKPS2	CLKPS1	CLKPS0	page 48
(0x60)	WDTCSR	WDIF	WDIE	WDP3	WDCE	WDE	WDP2	WDP1	WDP0	page 65
0x3F (0x5F)	SREG	I	T	H	S	V	N	Z	C	page 13
0x3E (0x5E)	SPH	SP15	SP14	SP13	SP12	SP11	SP10	SP9	SP8	page 15
0x3D (0x5D)	SPL	SP7	SP6	SP5	SP4	SP3	SP2	SP1	SP0	page 15
0x3C (0x5C)	EIND	-	-	-	-	-	-	-	EIND0	page 16
0x3B (0x5B)	RAMPZ	-	-	-	-	-	-	RAMPZ1	RAMPZ0	page 16
0x3A (0x5A)	Reserved	-	-	-	-	-	-	-	-	
0x39 (0x59)	Reserved	-	-	-	-	-	-	-	-	
0x38 (0x58)	Reserved	-	-	-	-	-	-	-	-	
0x37 (0x57)	SPMCSR	SPMIE	RWWSB	SIGRD	RWWSRE	BLBSET	PGWRT	PGERS	SPMEN	page 323
0x36 (0x56)	Reserved	-	-	-	-	-	-	-	-	
0x35 (0x55)	MCUCR	JTD	-	-	PUD	-	-	IVSEL	IVCE	page 64, 108, 96, 301
0x34 (0x54)	MCUSR	-	-	-	JTRF	WDRF	BORF	EXTRF	PORF	page 301
0x33 (0x53)	SMCR	-	-	-	-	SM2	SM1	SM0	SE	page 50
0x32 (0x52)	Reserved	-	-	-	-	-	-	-	-	
0x31 (0x51)	OCDR	OCDR7	OCDR6	OCDR5	OCDR4	OCDR3	OCDR2	OCDR1	OCDR0	page 294
0x30 (0x50)	ACSR	ACD	ACBG	ACO	ACI	ACIE	ACIC	ACIS1	ACIS0	page 266
0x2F (0x4F)	Reserved	-	-	-	-	-	-	-	-	
0x2E (0x4E)	SPDR	SPI Data Register								page 199
0x2D (0x4D)	SPSR	SPIF	WCOL	-	-	-	-	-	SPI2X	page 198
0x2C (0x4C)	SPCR	SPIE	SPE	DORD	MSTR	CPOL	CPHA	SPR1	SPR0	page 197
0x2B (0x4B)	GPIOR2	General Purpose I/O Register 2								page 36
0x2A (0x4A)	GPIOR1	General Purpose I/O Register 1								page 36
0x29 (0x49)	Reserved	-	-	-	-	-	-	-	-	
0x28 (0x48)	OCR0B	Timer/Counter0 Output Compare Register B								page 130
0x27 (0x47)	OCR0A	Timer/Counter0 Output Compare Register A								page 130
0x26 (0x46)	TCNT0	Timer/Counter0 (8 Bit)								page 130
0x25 (0x45)	TCCR0B	FOC0A	FOC0B	-	-	WGM02	CS02	CS01	CS00	page 129
0x24 (0x44)	TCCR0A	COM0A1	COM0A0	COM0B1	COM0B0	-	-	WGM01	WGM00	page 126
0x23 (0x43)	GTCCR	TSM	-	-	-	-	-	PSRASY	PSRSYNC	page 166, 189
0x22 (0x42)	EEARH	-	-	-	-	EEPROM Address Register High Byte				page 34
0x21 (0x41)	EEARL	EEPROM Address Register Low Byte								page 34
0x20 (0x40)	EEDR	EEPROM Data Register								page 34
0x1F (0x3F)	EECR	-	-	EEPM1	EEPM0	EERIE	EEMPE	EEPE	EERE	page 34
0x1E (0x3E)	GPIOR0	General Purpose I/O Register 0								page 36
0x1D (0x3D)	EIMSK	INT7	INT6	INT5	INT4	INT3	INT2	INT1	INT0	page 111
0x1C (0x3C)	EIFR	INTF7	INTF6	INTF5	INTF4	INTF3	INTF2	INTF1	INTF0	page 112
0x1B (0x3B)	PCIFR	-	-	-	-	-	PCIF2	PCIF1	PCIF0	page 113
0x1A (0x3A)	TIFR5	-	-	ICF5	-	OCF5C	OCF5B	OCF5A	TOV5	page 162
0x19 (0x39)	TIFR4	-	-	ICF4	-	OCF4C	OCF4B	OCF4A	TOV4	page 162
0x18 (0x38)	TIFR3	-	-	ICF3	-	OCF3C	OCF3B	OCF3A	TOV3	page 162
0x17 (0x37)	TIFR2	-	-	-	-	-	OCF2B	OCF2A	TOV2	page 188
0x16 (0x36)	TIFR1	-	-	ICF1	-	OCF1C	OCF1B	OCF1A	TOV1	page 162
0x15 (0x35)	TIFR0	-	-	-	-	-	OCF0B	OCF0A	TOV0	page 131

Address	Name	Bit 7	Bit 6	Bit 5	Bit 4	Bit 3	Bit 2	Bit 1	Bit 0	Page
0x14 (0x34)	PORTG	-	-	PORTG5	PORTG4	PORTG3	PORTG2	PORTG1	PORTG0	page 98
0x13 (0x33)	DDRG	-	-	DDG5	DDG4	DDG3	DDG2	DDG1	DDG0	page 98
0x12 (0x32)	PING	-	-	PING5	PING4	PING3	PING2	PING1	PING0	page 98
0x11 (0x31)	PORTF	PORTF7	PORTF6	PORTF5	PORTF4	PORTF3	PORTF2	PORTF1	PORTF0	page 97
0x10 (0x30)	DDRF	DDF7	DDF6	DDF5	DDF4	DDF3	DDF2	DDF1	DDF0	page 98
0x0F (0x2F)	PINF	PINF7	PINF6	PINF5	PINF4	PINF3	PINF2	PINF1	PINF0	page 98
0x0E (0x2E)	PORTE	PORTE7	PORTE6	PORTE5	PORTE4	PORTE3	PORTE2	PORTE1	PORTE0	page 97
0x0D (0x2D)	DDRE	DDE7	DDE6	DDE5	DDE4	DDE3	DDE2	DDE1	DDE0	page 97
0x0C (0x2C)	PINE	PINE7	PINE6	PINE5	PINE4	PINE3	PINE2	PINE1	PINE0	page 98
0x0B (0x2B)	PORTD	PORTD7	PORTD6	PORTD5	PORTD4	PORTD3	PORTD2	PORTD1	PORTD0	page 97
0x0A (0x2A)	DDRD	DDD7	DDD6	DDD5	DDD4	DDD3	DDD2	DDD1	DDD0	page 97
0x09 (0x29)	PIND	PIND7	PIND6	PIND5	PIND4	PIND3	PIND2	PIND1	PIND0	page 97
0x08 (0x28)	PORTC	PORTC7	PORTC6	PORTC5	PORTC4	PORTC3	PORTC2	PORTC1	PORTC0	page 97
0x07 (0x27)	DDRC	DDC7	DDC6	DDC5	DDC4	DDC3	DDC2	DDC1	DDC0	page 97
0x06 (0x26)	PINC	PINC7	PINC6	PINC5	PINC4	PINC3	PINC2	PINC1	PINC0	page 97
0x05 (0x25)	PORTB	PORTB7	PORTB6	PORTB5	PORTB4	PORTB3	PORTB2	PORTB1	PORTB0	page 96
0x04 (0x24)	DDRB	DDB7	DDB6	DDB5	DDB4	DDB3	DDB2	DDB1	DDB0	page 96
0x03 (0x23)	PINB	PINB7	PINB6	PINB5	PINB4	PINB3	PINB2	PINB1	PINB0	page 96
0x02 (0x22)	PORTA	PORTA7	PORTA6	PORTA5	PORTA4	PORTA3	PORTA2	PORTA1	PORTA0	page 96
0x01 (0x21)	DDRA	DDA7	DDA6	DDA5	DDA4	DDA3	DDA2	DDA1	DDA0	page 96
0x00 (0x20)	PINA	PINA7	PINA6	PINA5	PINA4	PINA3	PINA2	PINA1	PINA0	page 96

Notes:
1. For compatibility with future devices, reserved bits should be written to zero if accessed. Reserved I/O memory addresses should never be written.
2. I/O registers within the address range $00 - $1F are directly bit-accessible using the SBI and CBI instructions. In these registers, the value of single bits can be checked by using the SBIS and SBIC instructions.
3. Some of the status flags are cleared by writing a logical one to them. Note that the CBI and SBI instructions will operate on all bits in the I/O register, writing a one back into any flag read as set, thus clearing the flag. The CBI and SBI instructions work with registers 0x00 to 0x1F only.
4. When using the I/O specific commands IN and OUT, the I/O addresses $00 - $3F must be used. When addressing I/O registers as data space using LD and ST instructions, $20 must be added to these addresses. The ATmega640/1280/1281/2560/2561 is a complex microcontroller with more peripheral units than can be supported within the 64 location reserved in Opcode for the IN and OUT instructions. For the Extended I/O space from $60 - $1FF in SRAM, only the ST/STS/STD and LD/LDS/LDD instructions can be used.

34. Instruction Set Summary

Mnemonics	Operands	Description	Operation	Flags	#Clocks
ARITHMETIC AND LOGIC INSTRUCTIONS					
ADD	Rd, Rr	Add two Registers	Rd ← Rd + Rr	Z, C, N, V, H	1
ADC	Rd, Rr	Add with Carry two Registers	Rd ← Rd + Rr + C	Z, C, N, V, H	1
ADIW	Rdl,K	Add Immediate to Word	Rdh:Rdl ← Rdh:Rdl + K	Z, C, N, V, S	2
SUB	Rd, Rr	Subtract two Registers	Rd ← Rd - Rr	Z, C, N, V, H	1
SUBI	Rd, K	Subtract Constant from Register	Rd ← Rd - K	Z, C, N, V, H	1
SBC	Rd, Rr	Subtract with Carry two Registers	Rd ← Rd - Rr - C	Z, C, N, V, H	1
SBCI	Rd, K	Subtract with Carry Constant from Reg.	Rd ← Rd - K - C	Z, C, N, V, H	1
SBIW	Rdl,K	Subtract Immediate from Word	Rdh:Rdl ← Rdh:Rdl - K	Z, C, N, V, S	2
AND	Rd, Rr	Logical AND Registers	Rd ← Rd • Rr	Z, N, V	1
ANDI	Rd, K	Logical AND Register and Constant	Rd ← Rd • K	Z, N, V	1
OR	Rd, Rr	Logical OR Registers	Rd ← Rd v Rr	Z, N, V	1
ORI	Rd, K	Logical OR Register and Constant	Rd ← Rd v K	Z, N, V	1
EOR	Rd, Rr	Exclusive OR Registers	Rd ← Rd ⊕ Rr	Z, N, V	1
COM	Rd	One's Complement	Rd ← 0xFF − Rd	Z, C, N, V	1
NEG	Rd	Two's Complement	Rd ← 0x00 − Rd	Z, C, N, V, H	1
SBR	Rd,K	Set Bit(s) in Register	Rd ← Rd v K	Z, N, V	1
CBR	Rd,K	Clear Bit(s) in Register	Rd ← Rd • (0xFF - K)	Z, N, V	1
INC	Rd	Increment	Rd ← Rd + 1	Z, N, V	1
DEC	Rd	Decrement	Rd ← Rd − 1	Z, N, V	1
TST	Rd	Test for Zero or Minus	Rd ← Rd • Rd	Z, N, V	1
CLR	Rd	Clear Register	Rd ← Rd ⊕ Rd	Z, N, V	1
SER	Rd	Set Register	Rd ← 0xFF	None	1
MUL	Rd, Rr	Multiply Unsigned	R1:R0 ← Rd x Rr	Z, C	2
MULS	Rd, Rr	Multiply Signed	R1:R0 ← Rd x Rr	Z, C	2
MULSU	Rd, Rr	Multiply Signed with Unsigned	R1:R0 ← Rd x Rr	Z, C	2
FMUL	Rd, Rr	Fractional Multiply Unsigned	R1:R0 ← (Rd x Rr) << 1	Z, C	2
FMULS	Rd, Rr	Fractional Multiply Signed	R1:R0 ← (Rd x Rr) << 1	Z, C	2
FMULSU	Rd, Rr	Fractional Multiply Signed with Unsigned	R1:R0 ← (Rd x Rr) << 1	Z, C	2
BRANCH INSTRUCTIONS					
RJMP	k	Relative Jump	PC ← PC + k + 1	None	2
IJMP		Indirect Jump to (Z)	PC ← Z	None	2
EIJMP		Extended Indirect Jump to (Z)	PC ←(EIND:Z)	None	2
JMP	k	Direct Jump	PC ← k	None	3
RCALL	k	Relative Subroutine Call	PC ← PC + k + 1	None	4
ICALL		Indirect Call to (Z)	PC ← Z	None	4
EICALL		Extended Indirect Call to (Z)	PC ←(EIND:Z)	None	4
CALL	k	Direct Subroutine Call	PC ← k	None	5
RET		Subroutine Return	PC ← STACK	None	5
RETI		Interrupt Return	PC ← STACK	I	5
CPSE	Rd,Rr	Compare, Skip if Equal	if (Rd = Rr) PC ← PC + 2 or 3	None	1/2/3
CP	Rd,Rr	Compare	Rd − Rr	Z, N, V, C, H	1
CPC	Rd,Rr	Compare with Carry	Rd − Rr − C	Z, N, V, C, H	1
CPI	Rd,K	Compare Register with Immediate	Rd − K	Z, N, V, C, H	1
SBRC	Rr, b	Skip if Bit in Register Cleared	if (Rr(b)=0) PC ← PC + 2 or 3	None	1/2/3
SBRS	Rr, b	Skip if Bit in Register is Set	if (Rr(b)=1) PC ← PC + 2 or 3	None	1/2/3
SBIC	P, b	Skip if Bit in I/O Register Cleared	if (P(b)=0) PC ← PC + 2 or 3	None	1/2/3
SBIS	P, b	Skip if Bit in I/O Register is Set	if (P(b)=1) PC ← PC + 2 or 3	None	1/2/3
BRBS	s, k	Branch if Status Flag Set	if (SREG(s) = 1) then PC←PC+k + 1	None	1/2
BRBC	s, k	Branch if Status Flag Cleared	if (SREG(s) = 0) then PC←PC+k + 1	None	1/2
BREQ	k	Branch if Equal	if (Z = 1) then PC ← PC + k + 1	None	1/2
BRNE	k	Branch if Not Equal	if (Z = 0) then PC ← PC + k + 1	None	1/2
BRCS	k	Branch if Carry Set	if (C = 1) then PC ← PC + k + 1	None	1/2
BRCC	k	Branch if Carry Cleared	if (C = 0) then PC ← PC + k + 1	None	1/2
BRSH	k	Branch if Same or Higher	if (C = 0) then PC ← PC + k + 1	None	1/2
BRLO	k	Branch if Lower	if (C = 1) then PC ← PC + k + 1	None	1/2
BRMI	k	Branch if Minus	if (N = 1) then PC ← PC + k + 1	None	1/2
BRPL	k	Branch if Plus	if (N = 0) then PC ← PC + k + 1	None	1/2
BRGE	k	Branch if Greater or Equal, Signed	if (N ⊕ V= 0) then PC ← PC + k + 1	None	1/2
BRLT	k	Branch if Less Than Zero, Signed	if (N ⊕ V= 1) then PC ← PC + k + 1	None	1/2
BRHS	k	Branch if Half Carry Flag Set	if (H = 1) then PC ← PC + k + 1	None	1/2
BRHC	k	Branch if Half Carry Flag Cleared	if (H = 0) then PC ← PC + k + 1	None	1/2
BRTS	k	Branch if T Flag Set	if (T = 1) then PC ← PC + k + 1	None	1/2
BRTC	k	Branch if T Flag Cleared	if (T = 0) then PC ← PC + k + 1	None	1/2
BRVS	k	Branch if Overflow Flag is Set	if (V = 1) then PC ← PC + k + 1	None	1/2

Mnemonics	Operands	Description	Operation	Flags	#Clocks
BRVC	k	Branch if Overflow Flag is Cleared	if (V = 0) then PC ← PC + k + 1	None	1/2
BRIE	k	Branch if Interrupt Enabled	if (I = 1) then PC ← PC + k + 1	None	1/2
BRID	k	Branch if Interrupt Disabled	if (I = 0) then PC ← PC + k + 1	None	1/2
BIT AND BIT-TEST INSTRUCTIONS					
SBI	P,b	Set Bit in I/O Register	I/O(P,b) ← 1	None	2
CBI	P,b	Clear Bit in I/O Register	I/O(P,b) ← 0	None	2
LSL	Rd	Logical Shift Left	Rd(n+1) ← Rd(n), Rd(0) ← 0	Z, C, N, V	1
LSR	Rd	Logical Shift Right	Rd(n) ← Rd(n+1), Rd(7) ← 0	Z, C, N, V	1
ROL	Rd	Rotate Left Through Carry	Rd(0)←C,Rd(n+1)← Rd(n),C←Rd(7)	Z, C, N, V	1
ROR	Rd	Rotate Right Through Carry	Rd(7)←C,Rd(n)← Rd(n+1),C←Rd(0)	Z, C, N, V	1
ASR	Rd	Arithmetic Shift Right	Rd(n) ← Rd(n+1), n=0..6	Z, C, N, V	1
SWAP	Rd	Swap Nibbles	Rd(3..0)←Rd(7..4),Rd(7..4)←Rd(3..0)	None	1
BSET	s	Flag Set	SREG(s) ← 1	SREG(s)	1
BCLR	s	Flag Clear	SREG(s) ← 0	SREG(s)	1
BST	Rr, b	Bit Store from Register to T	T ← Rr(b)	T	1
BLD	Rd, b	Bit load from T to Register	Rd(b) ← T	None	1
SEC		Set Carry	C ← 1	C	1
CLC		Clear Carry	C ← 0	C	1
SEN		Set Negative Flag	N ← 1	N	1
CLN		Clear Negative Flag	N ← 0	N	1
SEZ		Set Zero Flag	Z ← 1	Z	1
CLZ		Clear Zero Flag	Z ← 0	Z	1
SEI		Global Interrupt Enable	I ← 1	I	1
CLI		Global Interrupt Disable	I ← 0	I	1
SES		Set Signed Test Flag	S ← 1	S	1
CLS		Clear Signed Test Flag	S ← 0	S	1
SEV		Set Twos Complement Overflow.	V ← 1	V	1
CLV		Clear Twos Complement Overflow	V ← 0	V	1
SET		Set T in SREG	T ← 1	T	1
CLT		Clear T in SREG	T ← 0	T	1
SEH		Set Half Carry Flag in SREG	H ← 1	H	1
CLH		Clear Half Carry Flag in SREG	H ← 0	H	1
DATA TRANSFER INSTRUCTIONS					
MOV	Rd, Rr	Move Between Registers	Rd ← Rr	None	1
MOVW	Rd, Rr	Copy Register Word	Rd+1:Rd ← Rr+1:Rr	None	1
LDI	Rd, K	Load Immediate	Rd ← K	None	1
LD	Rd, X	Load Indirect	Rd ← (X)	None	2
LD	Rd, X+	Load Indirect and Post-Inc.	Rd ← (X), X ← X + 1	None	2
LD	Rd, - X	Load Indirect and Pre-Dec.	X ← X - 1, Rd ← (X)	None	2
LD	Rd, Y	Load Indirect	Rd ← (Y)	None	2
LD	Rd, Y+	Load Indirect and Post-Inc.	Rd ← (Y), Y ← Y + 1	None	2
LD	Rd, - Y	Load Indirect and Pre-Dec.	Y ← Y - 1, Rd ← (Y)	None	2
LDD	Rd,Y+q	Load Indirect with Displacement	Rd ← (Y + q)	None	2
LD	Rd, Z	Load Indirect	Rd ← (Z)	None	2
LD	Rd, Z+	Load Indirect and Post-Inc.	Rd ← (Z), Z ← Z+1	None	2
LD	Rd, -Z	Load Indirect and Pre-Dec.	Z ← Z - 1, Rd ← (Z)	None	2
LDD	Rd, Z+q	Load Indirect with Displacement	Rd ← (Z + q)	None	2
LDS	Rd, k	Load Direct from SRAM	Rd ← (k)	None	2
ST	X, Rr	Store Indirect	(X) ← Rr	None	2
ST	X+, Rr	Store Indirect and Post-Inc.	(X) ← Rr, X ← X + 1	None	2
ST	- X, Rr	Store Indirect and Pre-Dec.	X ← X - 1, (X) ← Rr	None	2
ST	Y, Rr	Store Indirect	(Y) ← Rr	None	2
ST	Y+, Rr	Store Indirect and Post-Inc.	(Y) ← Rr, Y ← Y + 1	None	2
ST	- Y, Rr	Store Indirect and Pre-Dec.	Y ← Y - 1, (Y) ← Rr	None	2
STD	Y+q,Rr	Store Indirect with Displacement	(Y + q) ← Rr	None	2
ST	Z, Rr	Store Indirect	(Z) ← Rr	None	2
ST	Z+, Rr	Store Indirect and Post-Inc.	(Z) ← Rr, Z ← Z + 1	None	2
ST	-Z, Rr	Store Indirect and Pre-Dec.	Z ← Z - 1, (Z) ← Rr	None	2
STD	Z+q,Rr	Store Indirect with Displacement	(Z + q) ← Rr	None	2
STS	k, Rr	Store Direct to SRAM	(k) ← Rr	None	2
LPM		Load Program Memory	R0 ← (Z)	None	3
LPM	Rd, Z	Load Program Memory	Rd ← (Z)	None	3
LPM	Rd, Z+	Load Program Memory and Post-Inc	Rd ← (Z), Z ← Z+1	None	3
ELPM		Extended Load Program Memory	R0 ← (RAMPZ:Z)	None	3
ELPM	Rd, Z	Extended Load Program Memory	Rd ← (RAMPZ:Z)	None	3
ELPM	Rd, Z+	Extended Load Program Memory	Rd ← (RAMPZ:Z), RAMPZ:Z ←RAMPZ:Z+1	None	3
SPM		Store Program Memory	(Z) ← R1:R0	None	-
IN	Rd, P	In Port	Rd ← P	None	1

Mnemonics	Operands	Description	Operation	Flags	#Clocks
OUT	P, Rr	Out Port	P ← Rr	None	1
PUSH	Rr	Push Register on Stack	STACK ← Rr	None	2
POP	Rd	Pop Register from Stack	Rd ← STACK	None	2
MCU CONTROL INSTRUCTIONS					
NOP		No Operation		None	1
SLEEP		Sleep	(see specific descr. for Sleep function)	None	1
WDR		Watchdog Reset	(see specific descr. for WDR/timer)	None	1
BREAK		Break	For On-chip Debug Only	None	N/A

Note: EICALL and EIJMP do not exist in ATmega640/1280/1281.
ELPM does not exist in ATmega640.

35. Ordering Information

35.1 ATmega640

Speed [MHz][2]	Power Supply	Ordering Code	Package[1][3]	Operation Range
8	1.8 - 5.5V	ATmega640V-8AU ATmega640V-8AUR[4] ATmega640V-8CU ATmega640V-8CUR[4]	100A 100A 100C1 100C1	Industrial (-40°C to 85°C)
16	2.7 - 5.5V	ATmega640-16AU ATmega640-16AUR[4] ATmega640-16CU ATmega640-16CUR[4]	100A 100A 100C1 100C1	

Notes:
1. This device can also be supplied in wafer form. Contact your local Atmel sales office for detailed ordering information and minimum quantities.
2. See “Speed Grades” on page 357.
3. Pb-free packaging, complies to the European Directive for Restriction of Hazardous Substances (RoHS directive). Also Halide free and fully Green.
4. Tape & Reel.

Package Type	
100A	100-lead, Thin (1.0mm) Plastic Gull Wing Quad Flat Package (TQFP)
100C1	100-ball, Chip Ball Grid Array (CBGA)

35.2 ATmega1280

Speed [MHz][2]	Power Supply	Ordering Code	Package[1][3]	Operation Range
8	1.8V - 5.5V	ATmega1280V-8AU ATmega1280V-8AUR[4] ATmega1280V-8CU ATmega1280V-8CUR[4]	100A 100A 100C1 100C1	Industrial (-40°C to 85°C)
16	2.7V - 5.5V	ATmega1280-16AU ATmega1280-16AUR[4] ATmega1280-16CU ATmega1280-16CUR[4]	100A 100A 100C1 100C1	

Notes:
1. This device can also be supplied in wafer form. Contact your local Atmel sales office for detailed ordering information and minimum quantities.
2. See "Speed Grades" on page 357.
3. Pb-free packaging, complies to the European Directive for Restriction of Hazardous Substances (RoHS directive). Also Halide free and fully Green.
4. Tape & Reel.

Package Type	
100A	100-lead, Thin (1.0mm) Plastic Gull Wing Quad Flat Package (TQFP)
100C1	100-ball, Chip Ball Grid Array (CBGA)

35.3 ATmega1281

Speed [MHz][2]	Power Supply	Ordering Code	Package[1][3]	Operation Range
8	1.8 - 5.5V	ATmega1281V-8AU ATmega1281V-8AUR[4] ATmega1281V-8MU ATmega1281V-8MUR[4]	64A 64A 64M2 64M2	Industrial (-40°C to 85°C)
16	2.7 - 5.5V	ATmega1281-16AU ATmega1281-16AUR[4] ATmega1281-16MU ATmega1281-16MUR[4]	64A 64A 64M2 64M2	

Notes:
1. This device can also be supplied in wafer form. Contact your local Atmel sales office for detailed ordering information and minimum quantities.
2. See "Speed Grades" on page 357.
3. Pb-free packaging, complies to the European Directive for Restriction of Hazardous Substances (RoHS directive). Also Halide free and fully Green.
4. Tape & Reel.

Package Type	
64A	64-lead, Thin (1.0mm) Plastic Gull Wing Quad Flat Package (TQFP)
64M2	64-pad, 9mm × 9mm × 1.0mm Body, Quad Flat No-lead/Micro Lead Frame Package (QFN/MLF)

35.4 ATmega2560

Speed [MHz][2]	Power Supply	Ordering Code	Package[1][3]	Operation Range
8	1.8V - 5.5V	ATmega2560V-8AU ATmega2560V-8AUR[4] ATmega2560V-8CU ATmega2560V-8CUR[4]	100A 100A 100C1 100C1	Industrial (-40°C to 85°C)
16	4.5V - 5.5V	ATmega2560-16AU ATmega2560-16AUR[4] ATmega2560-16CU ATmega2560-16CUR[4]	100A 100A 100C1 100C1	

Notes:
1. This device can also be supplied in wafer form. Contact your local Atmel sales office for detailed ordering information and minimum quantities.
2. See "Speed Grades" on page 357.
3. Pb-free packaging, complies to the European Directive for Restriction of Hazardous Substances (RoHS directive). Also Halide free and fully Green.
4. Tape & Reel.

Package Type	
100A	100-lead, Thin (1.0mm) Plastic Gull Wing Quad Flat Package (TQFP)
100C1	100-ball, Chip Ball Grid Array (CBGA)

35.5 ATmega2561

Speed [MHz][2]	Power Supply	Ordering Code	Package[1][3]	Operation Range
8	1.8V - 5.5V	ATmega2561V-8AU ATmega2561V-8AUR[4] ATmega2561V-8MU ATmega2561V-8MUR[4]	64A 64A 64M2 64M2	Industrial (-40°C to 85°C)
16	4.5V - 5.5V	ATmega2561-16AU ATmega2561-16AUR[4] ATmega2561-16MU ATmega2561-16MUR[4]	64A 64A 64M2 64M2	

Notes:
1. This device can also be supplied in wafer form.Contact your local Atmel sales office for detailed ordering information and minimum quantities.
2. See "Speed Grades" on page 357.
3. Pb-free packaging, complies to the European Directive for Restriction of Hazardous Substances (RoHS directive). Also Halide free and fully Green.
4. Tape & Reel.

Package Type	
64A	64-lead, Thin (1.0mm) Plastic Gull Wing Quad Flat Package (TQFP)
64M2	64-pad, 9mm × 9mm × 1.0mm Body, Quad Flat No-lead/Micro Lead Frame Package (QFN/MLF)

36. Packaging Information

36.1 100A

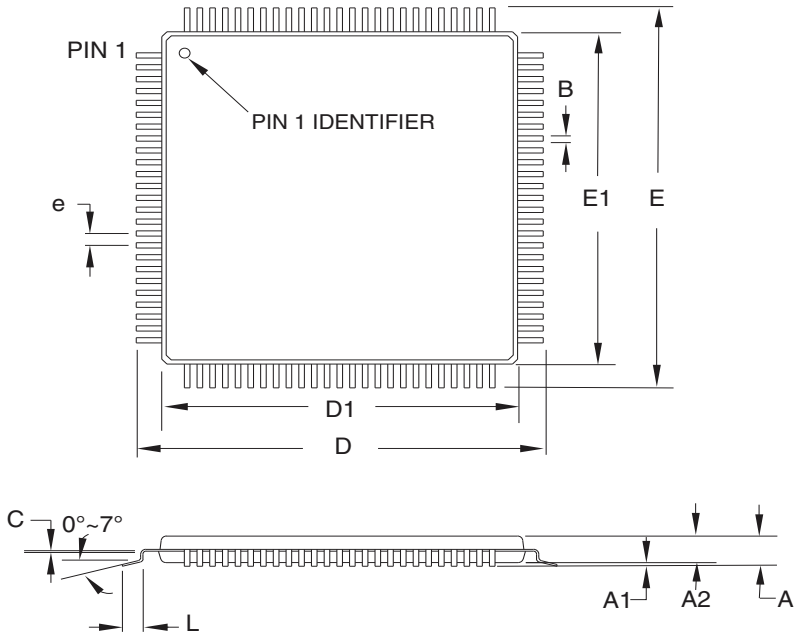

COMMON DIMENSIONS
(Unit of Measure = mm)

SYMBOL	MIN	NOM	MAX	NOTE
A	–	–	1.20	
A1	0.05	–	0.15	
A2	0.95	1.00	1.05	
D	15.75	16.00	16.25	
D1	13.90	14.00	14.10	Note 2
E	15.75	16.00	16.25	
E1	13.90	14.00	14.10	Note 2
B	0.17	–	0.27	
C	0.09	–	0.20	
L	0.45	–	0.75	
e	0.50 TYP			

Notes:
1. This package conforms to JEDEC reference MS-026, Variation AED.
2. Dimensions D1 and E1 do not include mold protrusion. Allowable protrusion is 0.25 mm per side. Dimensions D1 and E1 are maximum plastic body size dimensions including mold mismatch.
3. Lead coplanarity is 0.08 mm maximum.

2010-10-20

	TITLE	DRAWING NO.	REV.
Atmel Package Drawing Contact: packagedrawings@atmel.com	**100A**, 100-lead, 14 x 14 mm Body Size, 1.0 mm Body Thickness, 0.5 mm Lead Pitch, Thin Profile Plastic Quad Flat Package (TQFP)	100A	D

36.2 100C1

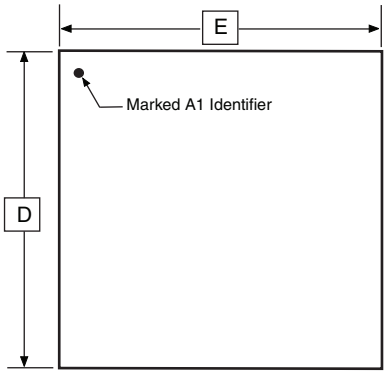

TOP VIEW

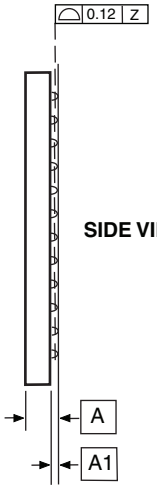

SIDE VIEW

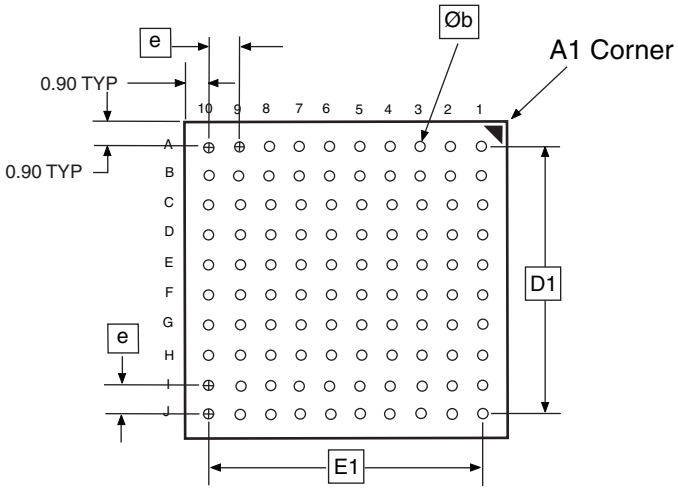

BOTTOM VIEW

COMMON DIMENSIONS
(Unit of Measure = mm)

SYMBOL	MIN	NOM	MAX	NOTE
A	1.10	–	1.20	
A1	0.30	0.35	0.40	
D	8.90	9.00	9.10	
E	8.90	9.00	9.10	
D1	7.10	7.20	7.30	
E1	7.10	7.20	7.30	
Øb	0.35	0.40	0.45	
e	0.80 TYP			

5/25/06

Atmel 2325 Orchard Parkway San Jose, CA 95131	TITLE **100C1**, 100-ball, 9 x 9 x 1.2 mm Body, Ball Pitch 0.80 mm Chip Array BGA Package (CBGA)	DRAWING NO. 100C1	REV. A

36.3 64A

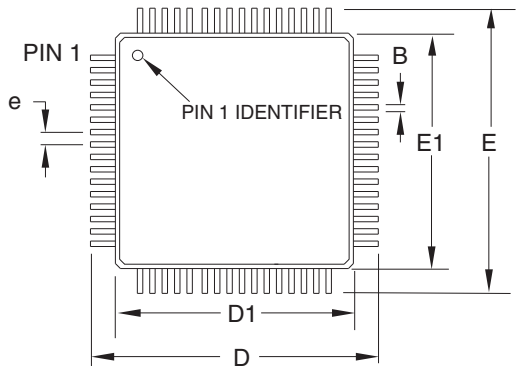

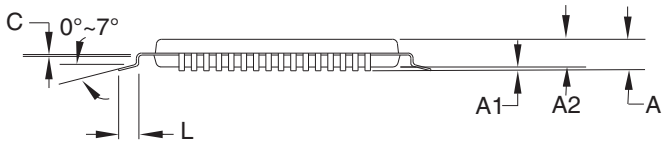

COMMON DIMENSIONS
(Unit of measure = mm)

SYMBOL	MIN	NOM	MAX	NOTE
A	–	–	1.20	
A1	0.05	–	0.15	
A2	0.95	1.00	1.05	
D	15.75	16.00	16.25	
D1	13.90	14.00	14.10	Note 2
E	15.75	16.00	16.25	
E1	13.90	14.00	14.10	Note 2
B	0.30	–	0.45	
C	0.09	–	0.20	
L	0.45	–	0.75	
e	0.80 TYP			

Notes:
1. This package conforms to JEDEC reference MS-026, Variation AEB.
2. Dimensions D1 and E1 do not include mold protrusion. Allowable protrusion is 0.25mm per side. Dimensions D1 and E1 are maximum plastic body size dimensions including mold mismatch.
3. Lead coplanarity is 0.10mm maximum.

2010-10-20

	TITLE	DRAWING NO.	REV.
Atmel 2325 Orchard Parkway San Jose, CA 95131	**64A,** 64-lead, 14 x 14mm Body Size, 1.0mm Body Thickness, 0.8mm Lead Pitch, Thin Profile Plastic Quad Flat Package (TQFP)	64A	C

36.4 64M2

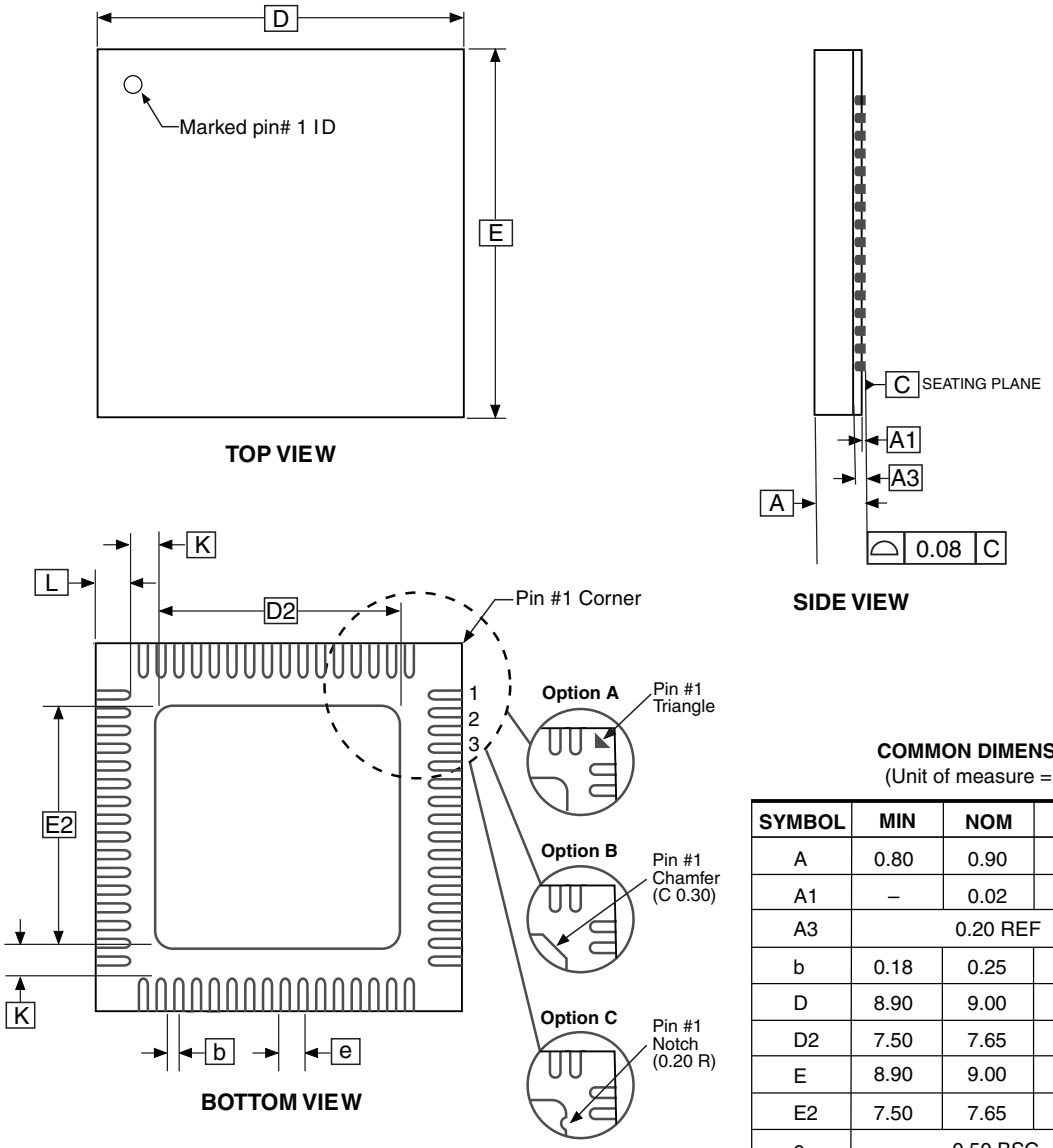

COMMON DIMENSIONS
(Unit of measure = mm)

SYMBOL	MIN	NOM	MAX	NOTE
A	0.80	0.90	1.00	
A1	–	0.02	0.05	
A3		0.20 REF		
b	0.18	0.25	0.30	
D	8.90	9.00	9.10	
D2	7.50	7.65	7.80	
E	8.90	9.00	9.10	
E2	7.50	7.65	7.80	
e		0.50 BSC		
L	0.35	0.40	0.45	
K	0.20	0.27	0.40	

Notes: 1. JEDEC Standard MO-220, (SAW Singulation) fig . 1, VMMD.
2. Dimension and tolerance conform to ASMEY14.5M-1994.

2014-02-12

Atmel 2325 Orchard Parkway San Jose, CA 95131	**TITLE** **64M2**, 64-pad, 9 x 9 x 1.0mm Bod y, Lead Pitch 0.50mm , 7.65mm Exposed Pad, Micro Lead Frame Package (MLF)	**DRAWING NO.** 64M2	**REV.** E

37. Errata

37.1 ATmega640 rev. B

- **Inaccurate ADC conversion in differential mode with 200× gain**
- **High current consumption in sleep mode**

1. **Inaccurate ADC conversion in differential mode with 200× gain**
   With AVCC <3.6V, random conversions will be inaccurate. Typical absolute accuracy may reach 64 LSB.

   Problem Fix/Workaround
   None.

2. **High current consumption in sleep mode**
   If a pending interrupt cannot wake the part up from the selected sleep mode, the current consumption will increase during sleep when executing the SLEEP instruction directly after a SEI instruction.

   Problem Fix/Workaround
   Before entering sleep, interrupts not used to wake the part from the sleep mode should be disabled.

37.2 ATmega640 rev. A

- **Inaccurate ADC conversion in differential mode with 200× gain**
- **High current consumption in sleep mode**

1. **Inaccurate ADC conversion in differential mode with 200× gain**
   With AVCC <3.6V, random conversions will be inaccurate. Typical absolute accuracy may reach 64 LSB.

   Problem Fix/Workaround
   None.

2. **High current consumption in sleep mode**
   If a pending interrupt cannot wake the part up from the selected sleep mode, the current consumption will increase during sleep when executing the SLEEP instruction directly after a SEI instruction.

   Problem Fix/Workaround
   Before entering sleep, interrupts not used to wake the part from the sleep mode should be disabled.

37.3 ATmega1280 rev. B

- **High current consumption in sleep mode**

1. **High current consumption in sleep mode**
   If a pending interrupt cannot wake the part up from the selected sleep mode, the current consumption will increase during sleep when executing the SLEEP instruction directly after a SEI instruction.

   Problem Fix/Workaround
   Before entering sleep, interrupts not used to wake the part from the sleep mode should be disabled.

37.4 ATmega1280 rev. A

- **Inaccurate ADC conversion in differential mode with 200× gain**
- **High current consumption in sleep mode**

1. **Inaccurate ADC conversion in differential mode with 200× gain**
   With AVCC <3.6V, random conversions will be inaccurate. Typical absolute accuracy may reach 64 LSB.

Problem Fix/Workaround
None.

2. **High current consumption in sleep mode**
If a pending interrupt cannot wake the part up from the selected sleep mode, the current consumption will increase during sleep when executing the SLEEP instruction directly after a SEI instruction.

Problem Fix/Workaround
Before entering sleep, interrupts not used to wake the part from the sleep mode should be disabled.

37.5 ATmega1281 rev. B

- **High current consumption in sleep mode**

1. **High current consumption in sleep mode**
If a pending interrupt cannot wake the part up from the selected sleep mode, the current consumption will increase during sleep when executing the SLEEP instruction directly after a SEI instruction.

Problem Fix/Workaround
Before entering sleep, interrupts not used to wake the part from the sleep mode should be disabled.

37.6 ATmega1281 rev. A

- **Inaccurate ADC conversion in differential mode with 200× gain**
- **High current consumption in sleep mode**

1. **Inaccurate ADC conversion in differential mode with 200× gain**
With AVCC <3.6V, random conversions will be inaccurate. Typical absolute accuracy may reach 64 LSB.

Problem Fix/Workaround
None.

2. **High current consumption in sleep mode**
If a pending interrupt cannot wake the part up from the selected sleep mode, the current consumption will increase during sleep when executing the SLEEP instruction directly after a SEI instruction.

Problem Fix/Workaround
Before entering sleep, interrupts not used to wake the part from the sleep mode should be disabled.

37.7 ATmega2560 rev. F

- **ADC differential input amplification by 46dB (200x) not functional**

1. **ADC differential input amplification by 46dB (200x) not functional**
Problem Fix/Workaround
None.

37.8 ATmega2560 rev. E

No known errata.

37.9 ATmega2560 rev. D

Not sampled.

37.10 ATmega2560 rev. C

- **High current consumption in sleep mode**

1. **High current consumption in sleep mode**

   If a pending interrupt cannot wake the part up from the selected sleep mode, the current consumption will increase during sleep when executing the SLEEP instruction directly after a SEI instruction.

   Problem Fix/Workaround

   Before entering sleep, interrupts not used to wake the part from the sleep mode should be disabled.

37.11 ATmega2560 rev. B

Not sampled.

37.12 ATmega2560 rev. A

- **Non-Read-While-Write area of flash not functional**
- **Part does not work under 2.4 volts**
- **Incorrect ADC reading in differential mode**
- **Internal ADC reference has too low value**
- **IN/OUT instructions may be executed twice when Stack is in external RAM**
- **EEPROM read from application code does not work in Lock Bit Mode 3**

1. **Non-Read-While-Write area of flash not functional**

   The Non-Read-While-Write area of the flash is not working as expected. The problem is related to the speed of the part when reading the flash of this area.

   Problem Fix/Workaround

   - Only use the first 248K of the flash.

   - If boot functionality is needed, run the code in the Non-Read-While-Write area at maximum 1/4th of the maximum frequency of the device at any given voltage. This is done by writing the CLKPR register before entering the boot section of the code.

2. **Part does not work under 2.4 volts**

   The part does not execute code correctly below 2.4 volts.

   Problem Fix/Workaround

   Do not use the part at voltages below 2.4 volts.

3. **Incorrect ADC reading in differential mode**

   The ADC has high noise in differential mode. It can give up to 7 LSB error.

   Problem Fix/Workaround

   Use only the 7 MSB of the result when using the ADC in differential mode.

4. **Internal ADC reference has too low value**

   The internal ADC reference has a value lower than specified.

   Problem Fix/Workaround

   - Use AVCC or external reference.

   - The actual value of the reference can be measured by applying a known voltage to the ADC when using the internal reference. The result when doing later conversions can then be calibrated.

5. **IN/OUT instructions may be executed twice when Stack is in external RAM**
   If either an IN or an OUT instruction is executed directly before an interrupt occurs and the stack pointer is located in external ram, the instruction will be executed twice. In some cases this will cause a problem, for example:

   - If reading SREG it will appear that the I-flag is cleared.

   - If writing to the PIN registers, the port will toggle twice.

   - If reading registers with interrupt flags, the flags will appear to be cleared.

   Problem Fix/Workaround
   There are two application workarounds, where selecting one of them, will be omitting the issue:

   - Replace IN and OUT with LD/LDS/LDD and ST/STS/STD instructions.

   - Use internal RAM for stack pointer.

6. **EEPROM read from application code does not work in Lock Bit Mode 3**
   When the Memory Lock Bits LB2 and LB1 are programmed to mode 3, EEPROM read does not work from the application code.

   Problem Fix/Workaround
   Do not set Lock Bit Protection Mode 3 when the application code needs to read from EEPROM.

37.13 ATmega2561 rev. F

- **ADC differential input amplification by 46dB (200x) not functional**

1. **ADC differential input amplification by 46dB (200x) not functional**
   Problem Fix/Workaround
   None.

37.14 ATmega2561 rev. E

No known errata.

37.15 ATmega2561 rev. D

Not sampled.

37.16 ATmega2561 rev. C

- **High current consumption in sleep mode.**

1. **High current consumption in sleep mode**
   If a pending interrupt cannot wake the part up from the selected sleep mode, the current consumption will increase during sleep when executing the SLEEP instruction directly after a SEI instruction.

   Problem Fix/Workaround
   Before entering sleep, interrupts not used to wake the part from the sleep mode should be disabled.

37.17 ATmega2561 rev. B

Not sampled.

37.18 ATmega2561 rev. A

- **Non-Read-While-Write area of flash not functional**
- **Part does not work under 2.4 Volts**
- **Incorrect ADC reading in differential mode**
- **Internal ADC reference has too low value**
- **IN/OUT instructions may be executed twice when Stack is in external RAM**
- **EEPROM read from application code does not work in Lock Bit Mode 3**

1. **Non-Read-While-Write area of flash not functional**

   The Non-Read-While-Write area of the flash is not working as expected. The problem is related to the speed of the part when reading the flash of this area.

   Problem Fix/Workaround

   - Only use the first 248K of the flash.

   - If boot functionality is needed, run the code in the Non-Read-While-Write area at maximum 1/4th of the maximum frequency of the device at any given voltage. This is done by writing the CLKPR register before entering the boot section of the code.

2. **Part does not work under 2.4 volts**

   The part does not execute code correctly below 2.4 volts.

   Problem Fix/Workaround

   Do not use the part at voltages below 2.4 volts.

3. **Incorrect ADC reading in differential mode**

   The ADC has high noise in differential mode. It can give up to 7 LSB error.

   Problem Fix/Workaround

   Use only the 7 MSB of the result when using the ADC in differential mode.

4. **Internal ADC reference has too low value**

   The internal ADC reference has a value lower than specified.

   Problem Fix/Workaround

   - Use AVCC or external reference.

   - The actual value of the reference can be measured by applying a known voltage to the ADC when using the internal reference. The result when doing later conversions can then be calibrated.

5. **IN/OUT instructions may be executed twice when Stack is in external RAM**

   If either an IN or an OUT instruction is executed directly before an interrupt occurs and the stack pointer is located in external ram, the instruction will be executed twice. In some cases this will cause a problem, for example:

   - If reading SREG it will appear that the I-flag is cleared.

   - If writing to the PIN registers, the port will toggle twice.

   - If reading registers with interrupt flags, the flags will appear to be cleared.

   Problem Fix/Workaround

   There are two application workarounds, where selecting one of them, will be omitting the issue:

   - Replace IN and OUT with LD/LDS/LDD and ST/STS/STD instructions.

- Use internal RAM for stack pointer.

6. **EEPROM read from application code does not work in Lock Bit Mode 3**

   When the Memory Lock Bits LB2 and LB1 are programmed to mode 3, EEPROM read does not work from the application code.

   Problem Fix/Workaround

   Do not set Lock Bit Protection Mode 3 when the application code needs to read from EEPROM.

38. Datasheet Revision History

Note that the referring page numbers in this section are referring to this document. The referring revisions in this section are referring to the document revision.

38.1 Rev. 2549Q-02/2014

1. Updated the “Reset Sources” on page 57. Brown-out Reset: The MCU is reset when the supply voltage AVcc is below the Brown-out Reset threshold (VBOT) and the Brown-out Detector is enabled.
2. Updated the Figure 12-1 on page 58. Power-on reset is now connected to AVcc and not to Vcc.
3. Updated the content in “Brown-out Detection” on page 59. Replaced Vcc by AVcc throughout the section.
4. Updated the Figure 12-5 on page 60. Replaced Vcc by AVcc.
5. Updated “External Interrupts” on page 109. Removed the text “Note that recognition of falling or rising edge.....”.
6. Updated the description of “PCMSK1 – Pin Change Mask Register 1” on page 113. The description mentions "PCIE1 bit in EIMSK". This has been changed to “PCIE1 bit in PCICR”.
7. Updated “Ordering Information” in “ATmega2561” on page 411.
8. Removed Errata “Inaccurate ADC conversion in differential mode with 200× gain” from “ATmega1280 rev. B” on page 416 and from “ATmega1281 rev. B” on page 417
9. Updated “Errata” in “ATmega2560 rev. F” on page 417 and in “ATmega2561 rev. F” on page 419.
10. Updated the datasheet with new Atmel brand (new logo and addresses).

38.2 Rev. 2549P-10/2012

1. Replaced drawing of “64M2” on page 415.
2. Former page 439 has been deleted as the content of this page did not belong there (same page as the last page).
3. Some small correction made in the setup.

38.3 Rev. 2549O-05/2012

1. The datasheet changed status from Preliminary to Complete. Removed “Preliminary” from the front page.
2. Replaced Figure 10-3 on page 44 by a new one.
3. Updated the last page to include the new address for Atmel Japan site.

38.4 Rev. 2549N-05/2011

1. Added Atmel QTouch Library Support and QTouch Sensing Capablity Features.
2. Updated Cross-reference in “Bit 5, 2:0 - WDP3:0: Watchdog Timer Prescaler 3, 2, 1 and 0” on page 65.
3. Updated Assembly codes in section “USART Initialization” on page 205.
4. Added “Standard Power-On Reset” on page 360.

5. Added “Enhanced Power-On Reset” on page 361.
6. Updated Figure 32-13 on page 381
7. Updated “Ordering Information” on page 407 to include Tape & Reel devices.

38.5 Rev. 2549M-09/2010

1. Updated typos in Figure 26-9 on page 276 and in Figure 26-10 on page 277.
2. Note is added below Table 1-1 on page 3.
3. The values for “typical characteristics” in Table 31-9 on page 365 and Table 31-10 on page 366, has been rounded.
4. Units for t_{RST} and t_{BOD} in Table 31-3 on page 360 have been changed from “ns” to “µs”.
5. The figure text for Table 31-2 on page 359 has been changed.
6. Text in first column in Table 30-3 on page 326 has been changed from “Fuse Low Byte” to “Extended Fuse Byte”.
7. The text in “Power Reduction Register” on page 52 has been changed.
8. The value of the inductor in Figure 26-9 on page 276 and Figure 26-10 on page 277 has been changed to 10µH.
9. “Port A” has been changed into “Port K” in the first paragraph of “Features” on page 268.
10. Minimum wait delay for t_{WD_EEPROM} in Table 30-16 on page 340 has been changed from 9.0ms to 3.6ms
11. Dimension A3 is added in “64M2” on page 415.
12. Several cross-references are corrected.
13. “COM0A1:0” on page 127 is corrected to “COM0B1:0”.
14. Corrected some Figure and Table numbering.
15. Updated Section 10.6 “Low Frequency Crystal Oscillator” on page 43.

38.6 Rev. 2549L-08/07

1. Updated note in Table 10-11 on page 45.
2. Updated Table 10-3 on page 42, Table 10-5 on page 43, Table 10-9 on page 45.
3. Updated typos in “DC Characteristics” on page 355
4. Updated “Clock Characteristics” on page 359
5. Updated “External Clock Drive” on page 359.
6. Added “System and Reset Characteristics” on page 360.
7. Updated “SPI Timing Characteristics” on page 363.
8. Updated “ADC Characteristics – Preliminary Data” on page 365.
9. Updated ordering code in “ATmega640” on page 407.

38.7 Rev. 2549K-01/07

1. Updated Table 1-1 on page 3.
2. Updated “Pin Descriptions” on page 7.
3. Updated “Stack Pointer” on page 15.

4. Updated “Bit 1 – EEPE: EEPROM Programming Enable” on page 35.
5. Updated Assembly code example in “Thus, when the BOD is not enabled, after setting the ACBG bit or enabling the ADC, the user must always allow the reference to start up before the output from the Analog Comparator or ADC is used. To reduce power consumption in Power-down mode, the user can avoid the three conditions above to ensure that the reference is turned off before entering Power-down mode.” on page 60.
6: Updated “EIMSK – External Interrupt Mask Register” on page 111.
7. Updated Bit description in “PCIFR – Pin Change Interrupt Flag Register” on page 113.
8. Updated code example in “USART Initialization” on page 205.
9. Updated Figure 26-8 on page 276.
10. Updated “DC Characteristics” on page 355.

38.8 Rev. 2549J-09/06

1. Updated “” on page 46.
2. Updated code example in “Moving Interrupts Between Application and Boot Section” on page 107.
3. Updated “Timer/Counter Prescaler” on page 180.
4. Updated “Device Identification Register” on page 296.
5. Updated “Signature Bytes” on page 328.
6. Updated “Instruction Set Summary” on page 404.

38.9 Rev. 2549I-07/06

1. Added “Data Retention” on page 10.
2. Updated Table 16-3 on page 126, Table 16-6 on page 127, Table 16-8 on page 128, Table 17-2 on page 145, Table 17-4 on page 155, Table 17-5 on page 155, Table 20-3 on page 182, Table 20-6 on page 183 and Table 20-8 on page 184.
3. Updated “Fast PWM Mode” on page 146.

38.10 Rev. 2549H-06/06

1. Updated “” on page 46.
2. Updated “OSCCAL – Oscillator Calibration Register” on page 48.
3. Added Table 31-1 on page 359.

38.11 Rev. 2549G-06/06

1. Updated “Features” on page 1.
2. Added Figure 1-2 on page 3, Table 1-1 on page 3.
3. Updated “” on page 46.
4. Updated “Power Management and Sleep Modes” on page 50.

5. Updated note for Table 12-1 on page 65.
6. Updated Figure 26-9 on page 276 and Figure 26-10 on page 277.
7. Updated “Setting the Boot Loader Lock Bits by SPM” on page 316.
8. Updated “Ordering Information” on page 407.
9. Added Package information “100C1” on page 413.
10. Updated “Errata” on page 416.

38.12 Rev. 2549F-04/06

1. Updated Figure 9-3 on page 29, Figure 9-4 on page 30 and Figure 9-5 on page 30.
2. Updated Table 20-2 on page 182 and Table 20-3 on page 182.
3. Updated Features in “ADC – Analog to Digital Converter” on page 268.
4. Updated “Fuse Bits” on page 326.

38.13 Rev. 2549E-04/06

1. Updated “Features” on page 1.
2. Updated Table 12-1 on page 62.
3. Updated note for Table 12-1 on page 62.
4. Updated “Bit 6 – ACBG: Analog Comparator Bandgap Select” on page 266.
5. Updated “Prescaling and Conversion Timing” on page 271.
5. Updated “Maximum speed vs. VCC” on page 373.
6. Updated “Ordering Information” on page 407.

38.14 Rev. 2549D-12/05

1. Advanced Information Status changed to Preliminary.
2. Changed number of I/O Ports from 51 to 54.
3. Updatet typos in “TCCR0A – Timer/Counter Control Register A” on page 126.
4. Updated Features in “ADC – Analog to Digital Converter” on page 268.
5. Updated Operation in“ADC – Analog to Digital Converter” on page 268
6. Updated Stabilizing Time in “Changing Channel or Reference Selection” on page 274.
7. Updated Figure 26-1 on page 269, Figure 26-9 on page 276, Figure 26-10 on page 277.
8. Updated Text in “ADCSRB – ADC Control and Status Register B” on page 282.
9. Updated Note for Table 4 on page 42, Table 13-15 on page 82, Table 26-3 on page 281 and Table 26-6 on page 287.
10. Updated Table 31-9 on page 365 and Table 31-10 on page 366.
11. Updated “Filling the Temporary Buffer (Page Loading)” on page 315.
12. Updated “Typical Characteristics” on page 373.
13. Updated “Packaging Information” on page 412.
14. Updated “Errata” on page 416.

38.15 Rev. 2549C-09/05

1. Updated Speed Grade in section “Features” on page 1.
2. Added “Resources” on page 10.
3. Updated “SPI – Serial Peripheral Interface” on page 190. In Slave mode, low and high period SPI clock must be larger than 2 CPU cycles.
4. Updated “Bit Rate Generator Unit” on page 242.
5. Updated “Maximum speed vs. VCC” on page 373.
6. Updated “Ordering Information” on page 407.
7. Updated “Packaging Information” on page 412. Package 64M1 replaced by 64M2.
8. Updated “Errata” on page 416.

38.16 Rev. 2549B-05/05

1. JTAG ID/Signature for ATmega640 updated: 0x9608.
2. Updated Table 13-7 on page 78.
3. Updated “Serial Programming Instruction set” on page 340.
4. Updated “Errata” on page 416.

38.17 Rev. 2549A-03/05

1. Initial version.

Table of Contents

Features ***1***

1 Pin Configurations ***2***

2 Overview ***5***

2.1 Block Diagram 5

2.2 Comparison Between ATmega1281/2561 and ATmega640/1280/2560 7

2.3 Pin Descriptions 7

3 Resources ***10***

4 About Code Examples ***10***

5 Data Retention ***10***

6 Capacitive touch sensing ***10***

7 AVR CPU Core ***11***

7.1 Introduction 11

7.2 Architectural Overview 11

7.3 ALU – Arithmetic Logic Unit 12

7.4 Status Register 12

7.5 General Purpose Register File 13

7.6 Stack Pointer 15

7.7 Instruction Execution Timing 16

7.8 Reset and Interrupt Handling 17

8 AVR Memories ***20***

8.1 In-System Reprogrammable Flash Program Memory 20

8.2 SRAM Data Memory 20

8.3 EEPROM Data Memory 22

8.4 I/O Memory 26

9 External Memory Interface ***27***

9.1 Overview 27

9.2 Register Description 34

9.3 General Purpose registers 36

9.4 External Memory registers 36

10 System Clock and Clock Options ***39***

10.1 Overview 39

10.2 Clock Systems and their Distribution 39

10.3Clock Sources 40
10.4Low Power Crystal Oscillator 41
10.5Full Swing Crystal Oscillator 42
10.6Low Frequency Crystal Oscillator 43
10.7Calibrated Internal RC Oscillator 45
10.8128kHz Internal Oscillator 45
10.9External Clock 46
10.10Clock Output Buffer 47
10.11Timer/Counter Oscillator 47
10.12System Clock Prescaler 47
10.13Register Description 48

11 Power Management and Sleep Modes 50

11.1Sleep Modes 50
11.2Idle Mode 50
11.3ADC Noise Reduction Mode 51
11.4Power-down Mode 51
11.5Power-save Mode 51
11.6Standby Mode 51
11.7Extended Standby Mode 51
11.8Power Reduction Register 52
11.9Minimizing Power Consumption 52
11.10Register Description 54

12 System Control and Reset 57

12.1Resetting the AVR 57
12.2Reset Sources 57
12.3Internal Voltage Reference 60
12.4Watchdog Timer 61
12.5Register Description 64

13 I/O-Ports 67

13.1Introduction 67
13.2Ports as General Digital I/O 68
13.3Alternate Port Functions 72
13.4Register Description for I/O-Ports 96

14 Interrupts 101

14.1Interrupt Vectors in ATmega640/1280/1281/2560/2561 101

14.2Reset and Interrupt Vector placement 102
14.3Moving Interrupts Between Application and Boot Section 107
14.4Register Description 108

15 External Interrupts 109

15.1Pin Change Interrupt Timing 109
15.2Register Description 110

16 8-bit Timer/Counter0 with PWM 115

16.1Features 115
16.2Overview 115
16.3Timer/Counter Clock Sources 116
16.4Counter Unit 116
16.5Output Compare Unit 117
16.6Compare Match Output Unit 119
16.7Modes of Operation 120
16.8Timer/Counter Timing Diagrams 124
16.9Register Description 126

17 16-bit Timer/Counter (Timer/Counter 1, 3, 4, and 5) 133

17.1Features 133
17.2Overview 133
17.3Accessing 16-bit Registers 135
17.4Timer/Counter Clock Sources 138
17.5Counter Unit 139
17.6Input Capture Unit 140
17.7Output Compare Units 141
17.8Compare Match Output Unit 143
17.9Modes of Operation 144
17.10Timer/Counter Timing Diagrams 152
17.11Register Description 154

18 Timer/Counter 0, 1, 3, 4, and 5 Prescaler 164

18.1Internal Clock Source 164
18.2Prescaler Reset 164
18.3External Clock Source 164
18.4Register Description 166

19 Output Compare Modulator (OCM1C0A) 167

19.1Overview 167

19.2Description 167

20 8-bit Timer/Counter2 with PWM and Asynchronous Operation 169

20.1Overview 169

20.2Timer/Counter Clock Sources 170

20.3Counter Unit 170

20.4Modes of Operation 171

20.5Output Compare Unit 175

20.6Compare Match Output Unit 176

20.7Timer/Counter Timing Diagrams 177

20.8Asynchronous Operation of Timer/Counter2 179

20.9Timer/Counter Prescaler 180

20.10Register Description 182

21 SPI – Serial Peripheral Interface 190

21.1$\overline{SS}$ Pin Functionality 195

21.2Register Description 197

22 USART 200

22.1Features 200

22.2Overview 200

22.3Clock Generation 201

22.4Frame Formats 204

22.5USART Initialization 205

22.6Data Transmission – The USART Transmitter 207

22.7Data Reception – The USART Receiver 209

22.8Asynchronous Data Reception 213

22.9Multi-processor Communication Mode 216

22.10Register Description 218

22.11Examples of Baud Rate Setting 223

23 USART in SPI Mode 227

23.1Overview 227

23.2USART MSPIM vs. SPI 227

23.3SPI Data Modes and Timing 228

23.4Frame Formats 229

23.5Data Transfer 231

23.6USART MSPIM Register Description 232

24 2-wire Serial Interface 236

24.1Features 236
24.22-wire Serial Interface Bus Definition 236
24.3Data Transfer and Frame Format 237
24.4Multi-master Bus Systems, Arbitration, and Synchronization 239
24.5Overview of the TWI Module 241
24.6Using the TWI 244
24.7Transmission Modes 247
24.8Multi-master Systems and Arbitration 259
24.9Register Description 261

25 AC – Analog Comparator 265

25.1Analog Comparator Multiplexed Input 265
25.2Register Description 266

26 ADC – Analog to Digital Converter 268

26.1Features 268
26.2Operation 269
26.3Starting a Conversion 270
26.4Prescaling and Conversion Timing 271
26.5Changing Channel or Reference Selection 274
26.6ADC Noise Canceler 275
26.7ADC Conversion Result 280
26.8Register Description 281

27 JTAG Interface and On-chip Debug System 289

27.1Features 289
27.2Overview 289
27.3TAP - Test Access Port 290
27.4Using the Boundary-scan Chain 292
27.5Using the On-chip Debug System 292
27.6On-chip Debug Specific JTAG Instructions 293
27.7Using the JTAG Programming Capabilities 293
27.8Bibliography 294
27.9On-chip Debug Related Register in I/O Memory 294

28 IEEE 1149.1 (JTAG) Boundary-scan 295

28.1Features 295
28.2System Overview 295
28.3Data Registers 295

28.4Boundary-scan Specific JTAG Instructions 297
28.5Boundary-scan Chain 298
28.6Boundary-scan Related Register in I/O Memory 301
28.7ATmega640/1280/1281/2560/2561 Boundary-scan Order 301
28.8Boundary-scan Description Language Files 301

29 Boot Loader Support – Read-While-Write Self-Programming 310

29.1Features 310
29.2Application and Boot Loader Flash Sections 310
29.3Read-While-Write and No Read-While-Write Flash Sections 310
29.4Boot Loader Lock Bits 312
29.5Addressing the Flash During Self-Programming 314
29.6Self-Programming the Flash 315
29.7Register Description 323

30 Memory Programming 325

30.1Program And Data Memory Lock Bits 325
30.2Fuse Bits 326
30.3Signature Bytes 328
30.4Calibration Byte 328
30.5Page Size 328
30.6Parallel Programming Parameters, Pin Mapping, and Commands 328
30.7Parallel Programming 330
30.8Serial Downloading 338
30.9Programming via the JTAG Interface 342

31 Electrical Characteristics 355

31.1DC Characteristics 355
31.2Speed Grades 357
31.3Clock Characteristics 359
31.4External Clock Drive 359
31.5System and Reset Characteristics 360
31.62-wire Serial Interface Characteristics 361
31.7SPI Timing Characteristics 363
31.8ADC Characteristics – Preliminary Data 365
31.9External Data Memory Timing 367

32 Typical Characteristics 373

32.1Active Supply Current 373

32.2Idle Supply Current 376
32.3Power-down Supply Current 380
32.4Power-save Supply Current 381
32.5Standby Supply Current 382
32.6Pin Pull-up 382
32.7Pin Driver Strength 385
32.8Pin Threshold and Hysteresis 387
32.9BOD Threshold and Analog Comparator Offset 390
32.10Internal Oscillator Speed 392
32.11Current Consumption of Peripheral Units 394
32.12Current Consumption in Reset and Reset Pulsewidth 397

33 Register Summary 399

34 Instruction Set Summary 404

35 Ordering Information 407

35.1ATmega640 407
35.2ATmega1280 408
35.3ATmega1281 409
35.4ATmega2560 410
35.5ATmega2561 411

36 Packaging Information 412

36.1100A 412
36.2100C1 413
36.364A 414
36.464M2 415

37 Errata 416

37.1ATmega640 rev. B 416
37.2ATmega640 rev. A 416
37.3ATmega1280 rev. B 416
37.4ATmega1280 rev. A 416
37.5ATmega1281 rev. B 417
37.6ATmega1281 rev. A 417
37.7ATmega2560 rev. F 417
37.8ATmega2560 rev. E 417
37.9ATmega2560 rev. D 417
37.10ATmega2560 rev. C 418

37.11ATmega2560 rev. B 418
37.12ATmega2560 rev. A 418
37.13ATmega2561 rev. F 419
37.14ATmega2561 rev. E 419
37.15ATmega2561 rev. D 419
37.16ATmega2561 rev. C 419
37.17ATmega2561 rev. B 419
37.18ATmega2561 rev. A 420

38 Datasheet Revision History 422

38.1Rev. 2549Q-02/2014 422
38.2Rev. 2549P-10/2012 422
38.3Rev. 2549O-05/2012 422
38.4Rev. 2549N-05/2011 422
38.5Rev. 2549M-09/2010 423
38.6Rev. 2549L-08/07 423
38.7Rev. 2549K-01/07 423
38.8Rev. 2549J-09/06 424
38.9Rev. 2549I-07/06 424
38.10Rev. 2549H-06/06 424
38.11Rev. 2549G-06/06 424
38.12Rev. 2549F-04/06 425
38.13Rev. 2549E-04/06 425
38.14Rev. 2549D-12/05 425
38.15Rev. 2549C-09/05 426
38.16Rev. 2549B-05/05 426
38.17Rev. 2549A-03/05 426

Table of Contents i

Enabling Unlimited Possibilities®

Atmel Corporation 1600 Technology Drive, San Jose, CA 95110 USA **T:** (+1)(408) 441.0311 **F:** (+1)(408) 436.4200 | **www.atmel.com**

© 2014 Atmel Corporation. / Rev.: Atmel-2549Q-AVR-ATmega640/V-1280/V-1281/V-2560/V-2561/V-Datasheet_02/2014.

Atmel®, Atmel logo and combinations thereof, and others are registered trademarks or trademarks of Atmel Corporation or its subsidiaries. Other terms and product names may be trademarks of others.

DISCLAIMER: The information in this document is provided in connection with Atmel products. No license, express or implied, by estoppel or otherwise, to any intellectual property right is granted by this document or in connection with the sale of Atmel products. EXCEPT AS SET FORTH IN THE ATMEL TERMS AND CONDITIONS OF SALES LOCATED ON THE ATMEL WEBSITE, ATMEL ASSUMES NO LIABILITY WHATSOEVER AND DISCLAIMS ANY EXPRESS, IMPLIED OR STATUTORY WARRANTY RELATING TO ITS PRODUCTS INCLUDING, BUT NOT LIMITED TO, THE IMPLIED WARRANTY OF MERCHANTABILITY, FITNESS FOR A PARTICULAR PURPOSE, OR NON-INFRINGEMENT. IN NO EVENT SHALL ATMEL BE LIABLE FOR ANY DIRECT, INDIRECT, CONSEQUENTIAL, PUNITIVE, SPECIAL OR INCIDENTAL DAMAGES (INCLUDING, WITHOUT LIMITATION, DAMAGES FOR LOSS AND PROFITS, BUSINESS INTERRUPTION, OR LOSS OF INFORMATION) ARISING OUT OF THE USE OR INABILITY TO USE THIS DOCUMENT, EVEN IF ATMEL HAS BEEN ADVISED OF THE POSSIBILITY OF SUCH DAMAGES. Atmel makes no representations or warranties with respect to the accuracy or completeness of the contents of this document and reserves the right to make changes to specifications and products descriptions at any time without notice. Atmel does not make any commitment to update the information contained herein. Unless specifically provided otherwise, Atmel products are not suitable for, and shall not be used in, automotive applications. Atmel products are not intended, authorized, or warranted for use as components in applications intended to support or sustain life.

SAFETY-CRITICAL, MILITARY, AND AUTOMOTIVE APPLICATIONS DISCLAIMER: Atmel products are not designed for and will not be used in connection with any applications where the failure of such products would reasonably be expected to result in significant personal injury or death (“Safety-Critical Applications”) without an Atmel officer's specific written consent. Safety-Critical Applications include, without limitation, life support devices and systems, equipment or systems for the operation of nuclear facilities and weapons systems. Atmel products are not designed nor intended for use in military or aerospace applications or environments unless specifically designated by Atmel as military-grade. Atmel products are not designed nor intended for use in automotive applications unless specifically designated by Atmel as automotive-grade.