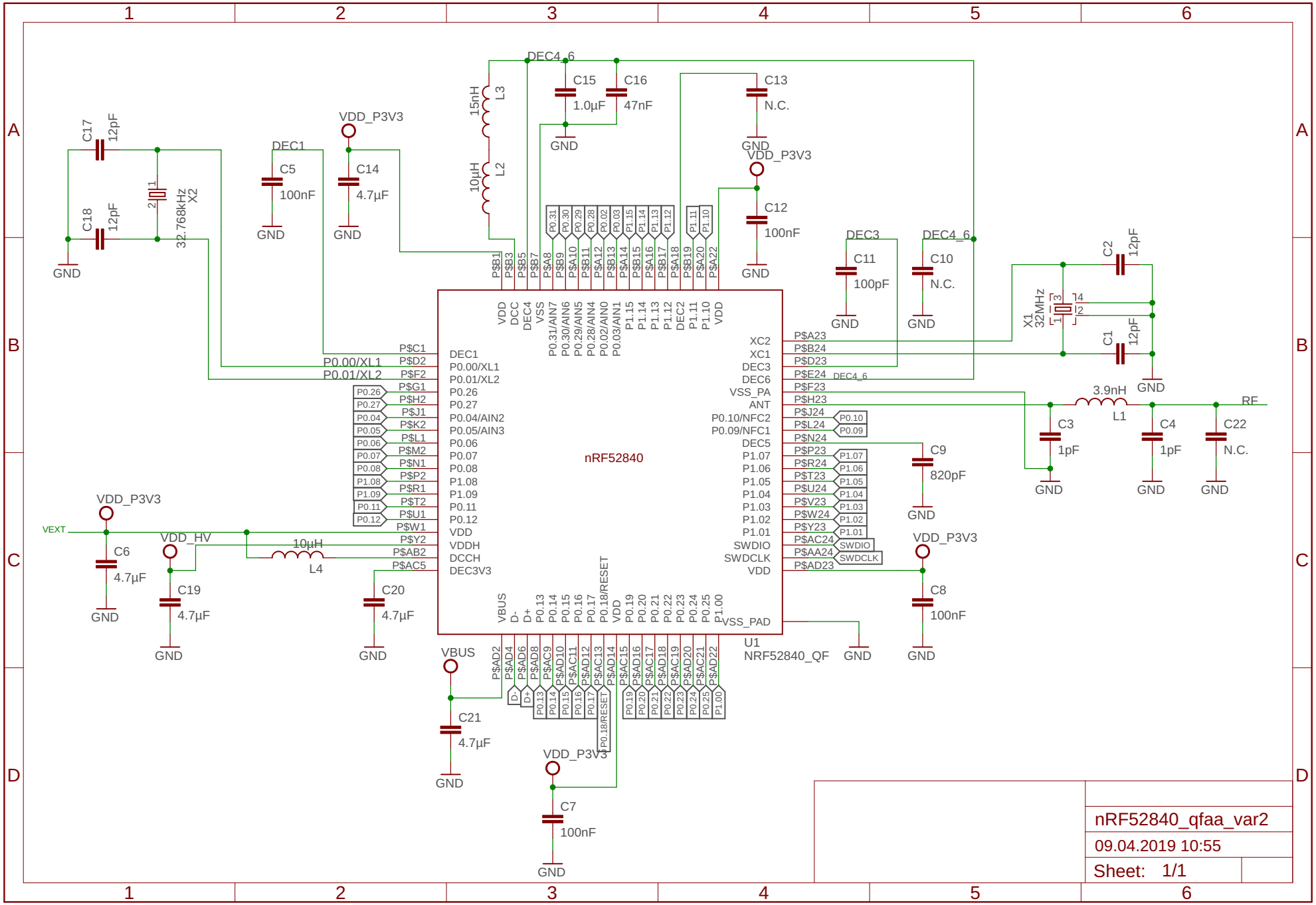
nRF52840
U1
NRF52840_QF
DEC1
P0.00/XL1
P0.01/XL2
P0.26
P0.27
P0.04/AIN2
P0.05/AIN3
P0.06
P0.07
P0.08
P1.08
P1.09
P0.11
P0.12
VDD
VDDH
DCCH
DEC3V3
VDD
DCC
DEC4
VSS
P0.31/AIN7
P0.30/AIN6
P0.29/AIN5
P0.28/AIN4
P0.02/AIN0
P0.03/AIN1
P1.15
P1.14
P1.13
P1.12
DEC2
P1.11
P1.10
VDD
XC2
XC1
DEC3
DEC6
VSS_PA
ANT
P0.10/NFC2
P0.09/NFC1
DEC5
P1.07
P1.06
P1.05
P1.04
P1.03
P1.02
P1.01
SWDIO
SWDCLK
VDD
VBUS
D-
D+
P0.13
P0.14
P0.15
P0.16
P0.17
P0.18/RESET
VDD
P0.19
P0.20
P0.21
P0.22
P0.23
P0.24
P0.25
P1.00
VSS_PAD
DEC4_6
C15
1.0µF
C16
47nF
C13
N.C.
C12
100nF
C11
100pF
C10
N.C.
C9
820pF
C8
100nF
C7
100nF
C5
100nF
C14
4.7µF
C17
12pF
C18
12pF
X2
32.768kHz
C2
12pF
C1
12pF
X1
32MHz
L1
3.9nH
C3
1pF
C4
1pF
C22
N.C.
RF
L2
10µH
L3
15nH
L4
10µH
C6
4.7µF
C19
4.7µF
C20
4.7µF
C21
4.7µF
VDD_P3V3
VEXT
VDD_HV
VBUS
GND
nRF52840_qfaa_var2
09.04.2019 10:55
Sheet: 1/1