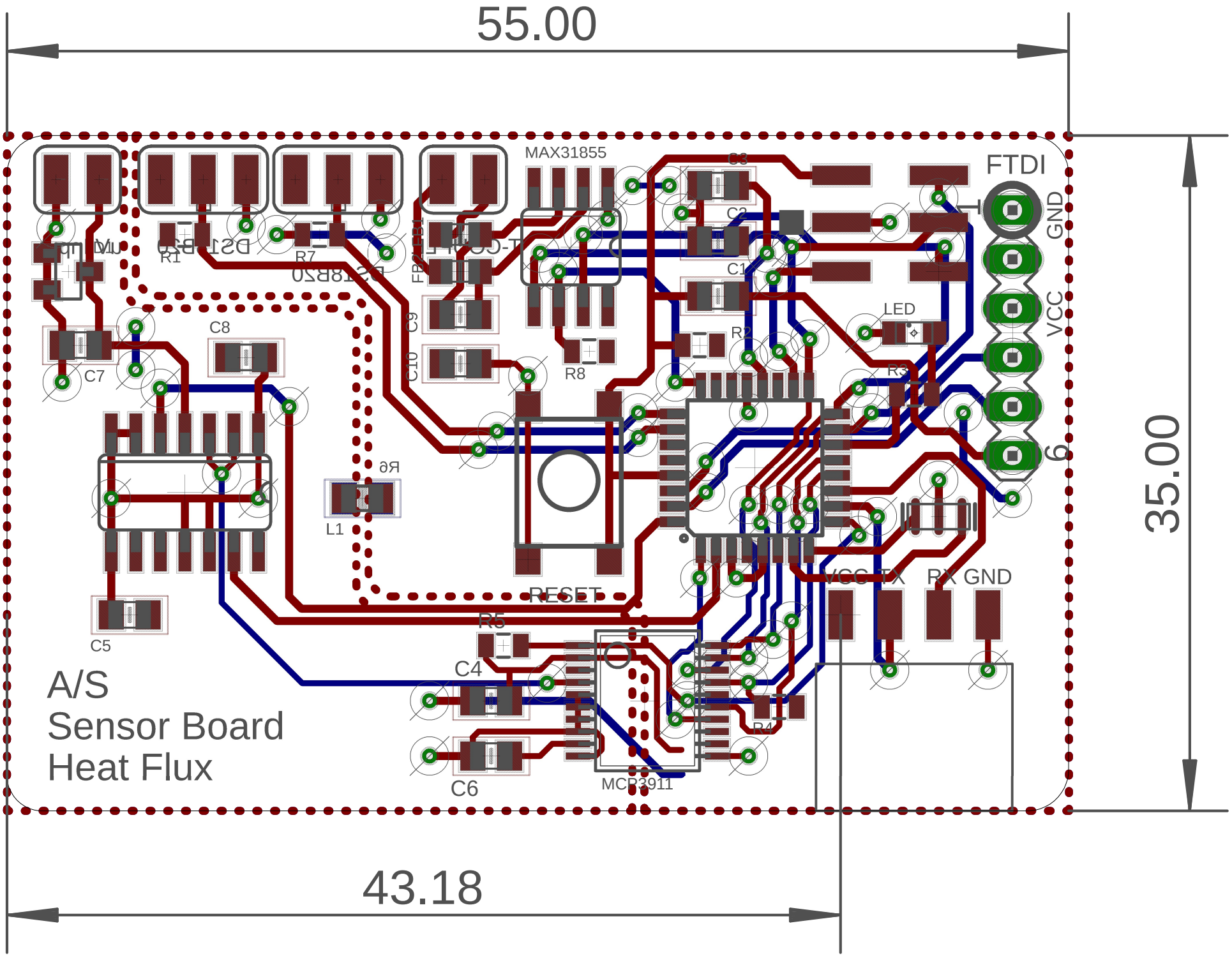
55.00
35.00
43.18
MAX31855
FTDI
GND
VCC
LED
C1
C2
C3
C4
C5
C6
C7
C8
C9
C10
R1
R2
R3
R4
R5
R6
R7
R8
L1
RESET
MCP3911
VCC TX RX GND
A/S
Sensor Board
Heat Flux