Spring Framework 6

Beginner to Guru

Introduction to Docker

Introduction to Docker

- What is Docker?
  - Docker is an open platform for developing, shipping, and running applications.
  - It enables you to separate your applications from your infrastructure so you can deliver software quickly.
  - With Docker, you can manage your infrastructure in the same ways you manage your applications.

Introduction to Docker

- What is a **Container**?
  - A container is a lightweight, standalone, executable package of software that includes everything needed to run an application: code, runtime, system tools, libraries, and settings.
- **Isolation:** Containers ensure that applications run in isolation from one another.
- **Consistency:** They provide a consistent environment across different stages of development, from development to testing to production.
- **Efficiency:** Containers share the host system's kernel and do not require a full operating system, making them more efficient than virtual machines.

SPRING FRAMEWORK GURU 2024

Introduction to Docker

- What is a **Image**?
  - A Docker image is a read-only template used to create containers.
  - Images contain the application and all the dependencies required to run that application.
- **Layers**: Images are built in layers. Each layer represents an instruction in the image's Dockerfile. When you change a layer, only that layer is rebuilt, making images lightweight, small, and fast to build.
- **Portability:** Images can be shared across different environments and platforms.

Docker Components

- **Docker Desktop** - GUI application for all major operating systems
- **Docker Engine** - The runtime for Docker Containers
- **Docker Build** - The build system to create Docker Images
- **Docker Compose** - Allows you to compose multi-container applications
- **Docker CLI** - Commend Line Interface for Docker
- **Docker Scout** - Vulnerability detection for Docker Images
- **Docker Extensions** - 3rd party extensions for the Docker environment
- **Docker Hub** - Docker’s Image Repository

Docker Networking

- Docker networking allows containers to communicate with each other, with the Docker host, and with external networks such as the internet.
- It provides various networking options to suit different use cases, ensuring isolation, scalability, and flexibility.
- Docker can have one or more virtual networks
- Containers get a virtual IP on one or more networks
  - Containers can use the same port since they have their own IP

Docker Networking Bridge Mode

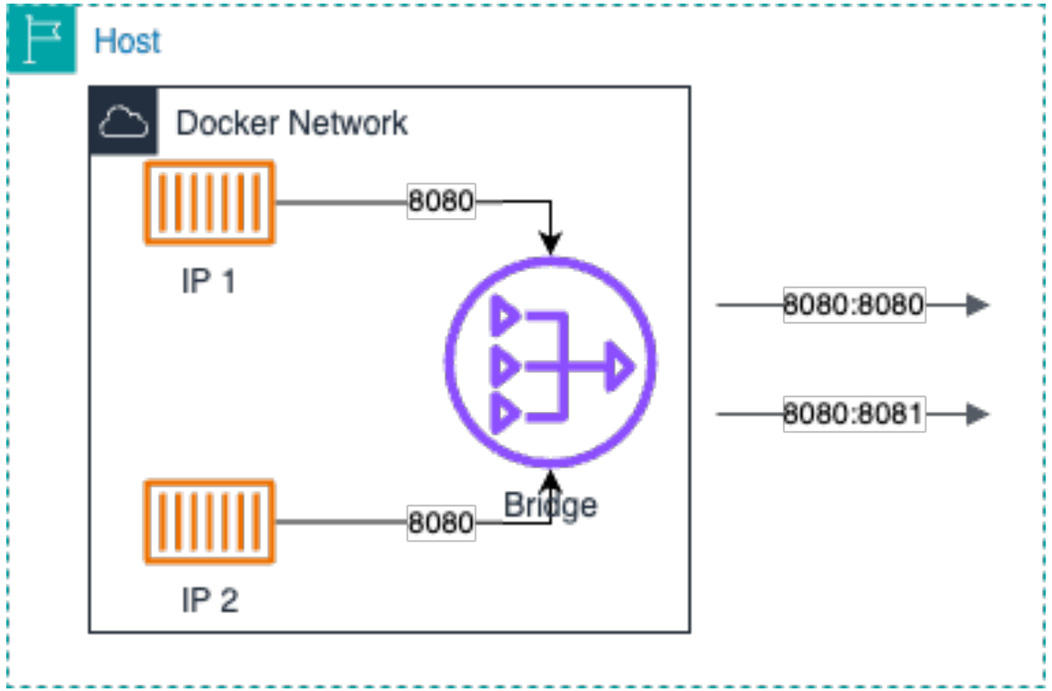

Docker Networking Drivers

- **Bridge** - Default network driver. Docker Containers run in isolation from host network
- **Host** - No network isolation. Use same network as host
- **None** - Completely isolate container from host and other containers
- **Overlay** - Connect multiple Docker Engines on different hosts together
- **ipvlan** - IPvlan networks provide full control over both IPv4 and IPv6 addressing.
- **macvlan** - Assign MAC address to a container

Docker Requirements

- To complete the Docker related content in this course you will need to have Docker installed
- Mac and Windows users will wish to install Docker Desktop
  - Docker Desktop is a GUI tool, but includes Docker Engine and Docker Compose
- Linux users can also install Docker Desktop
  - Optionally can install Docker Engine and Docker Compose directly
- Next sections has links to installation directions

SPRING FRAMEWORK GURU