Spring Framework 6

Beginner to Guru

Microservices Project Overview

Microservices Project

- We will implement our own flavor of the Spring Integration Cafe Sample project inspired by Gregor Hohpe's post "Starbucks Does Not Use Two-Phase Commit"
- We will add three beer pouring services for our virtual tap room
  - Based on 3 ideal temperatures for different beers
- Our project will use Kafka for messaging
- We will use Spring Kafka, not Spring Integration at this time

Spring Integration Example

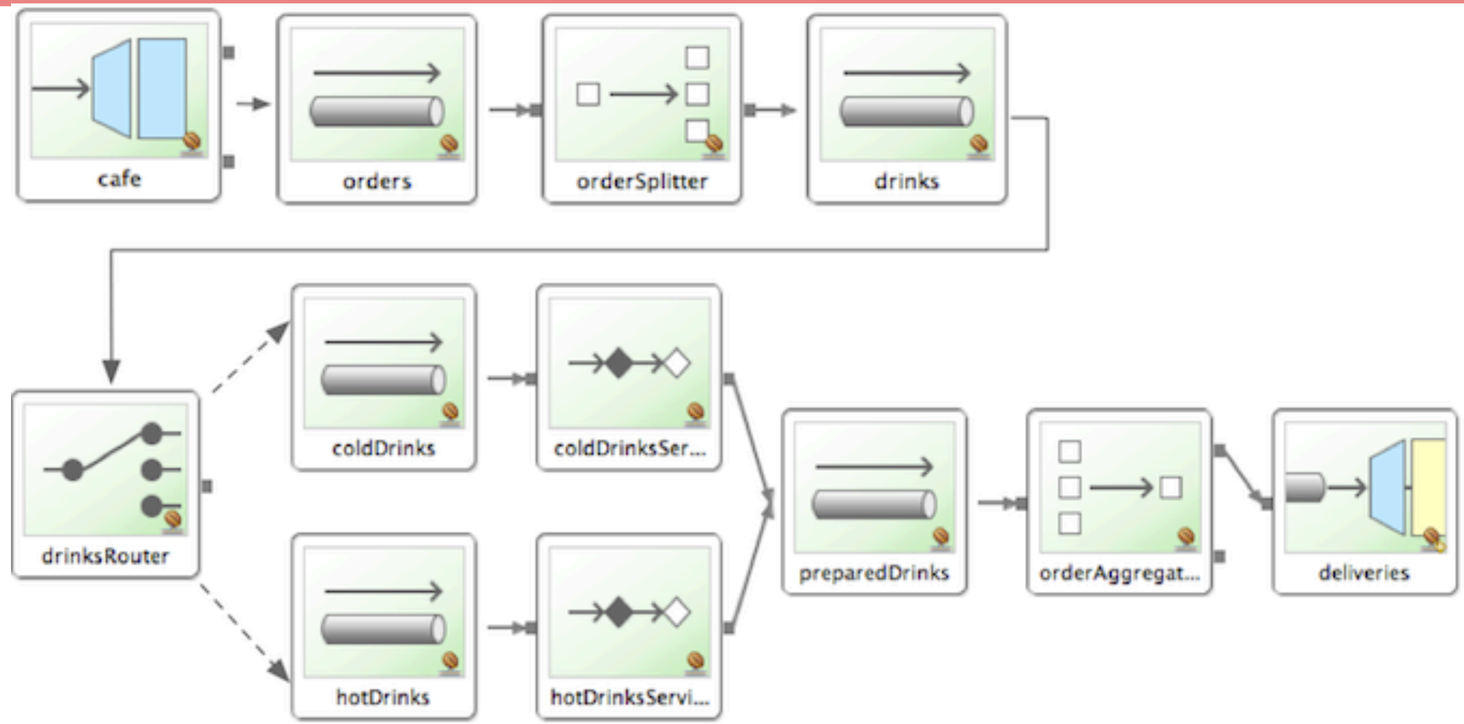

Sequence Diagram

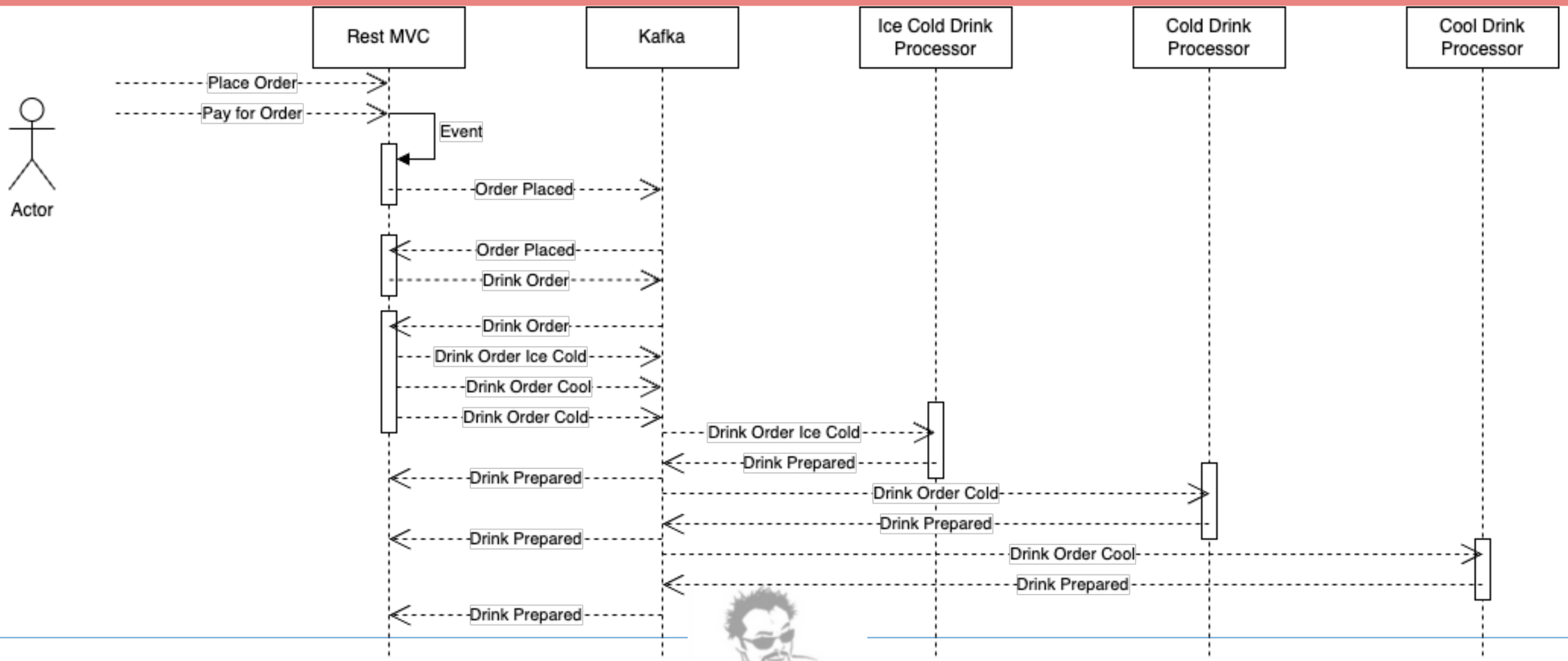

SPRING FRAMEWORK GURU 2024

Spring Integration Example

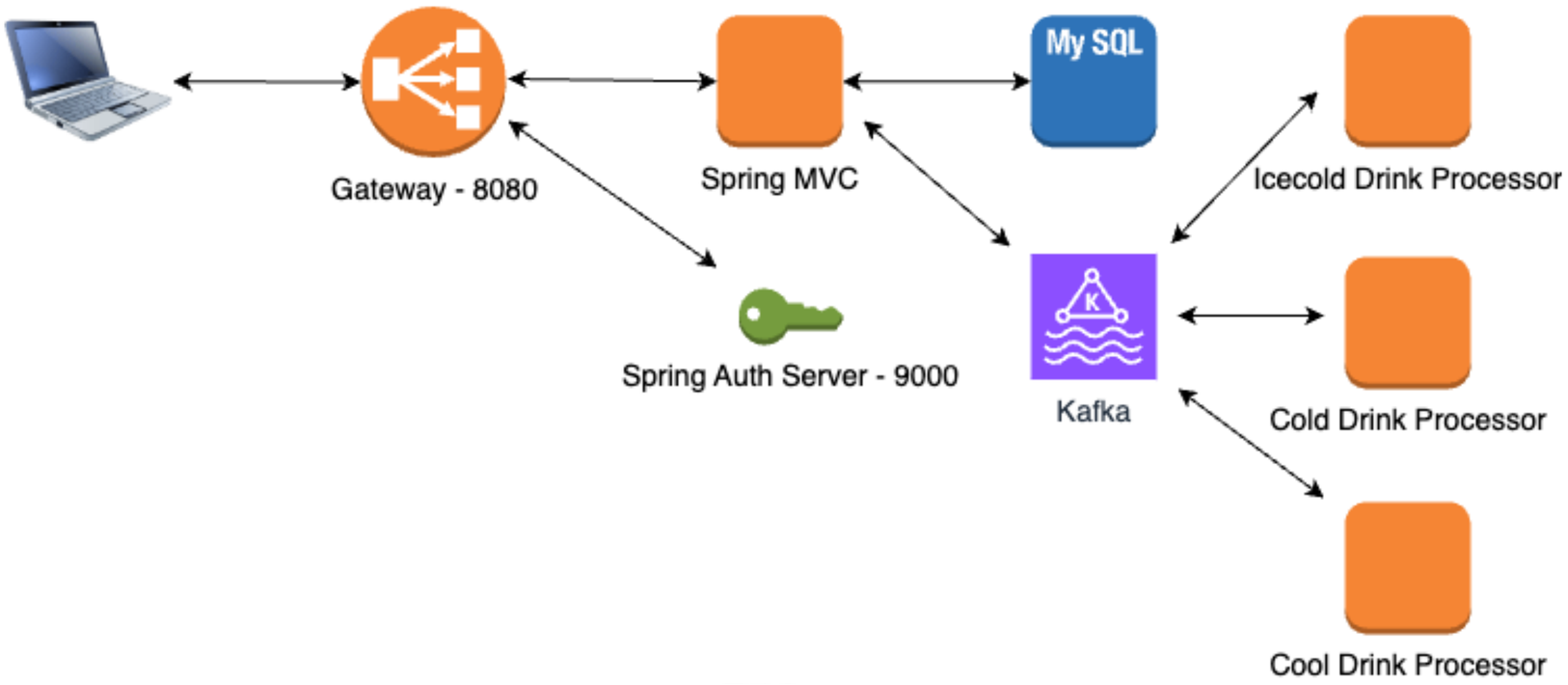

EIP - Order Splitter

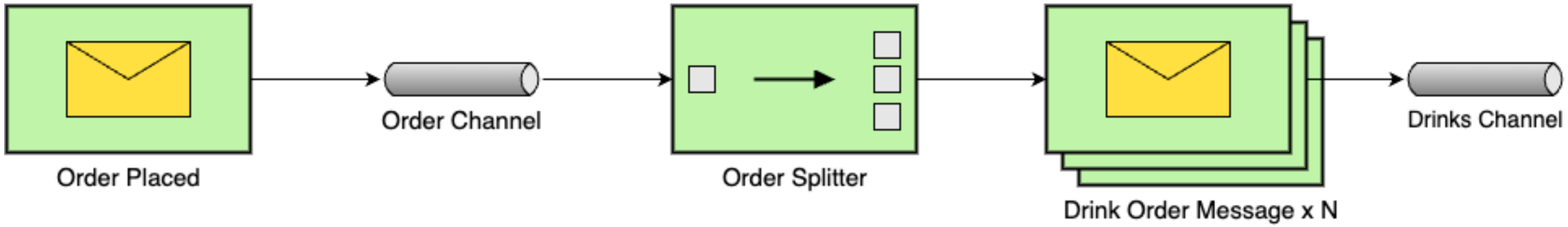

EIP Router

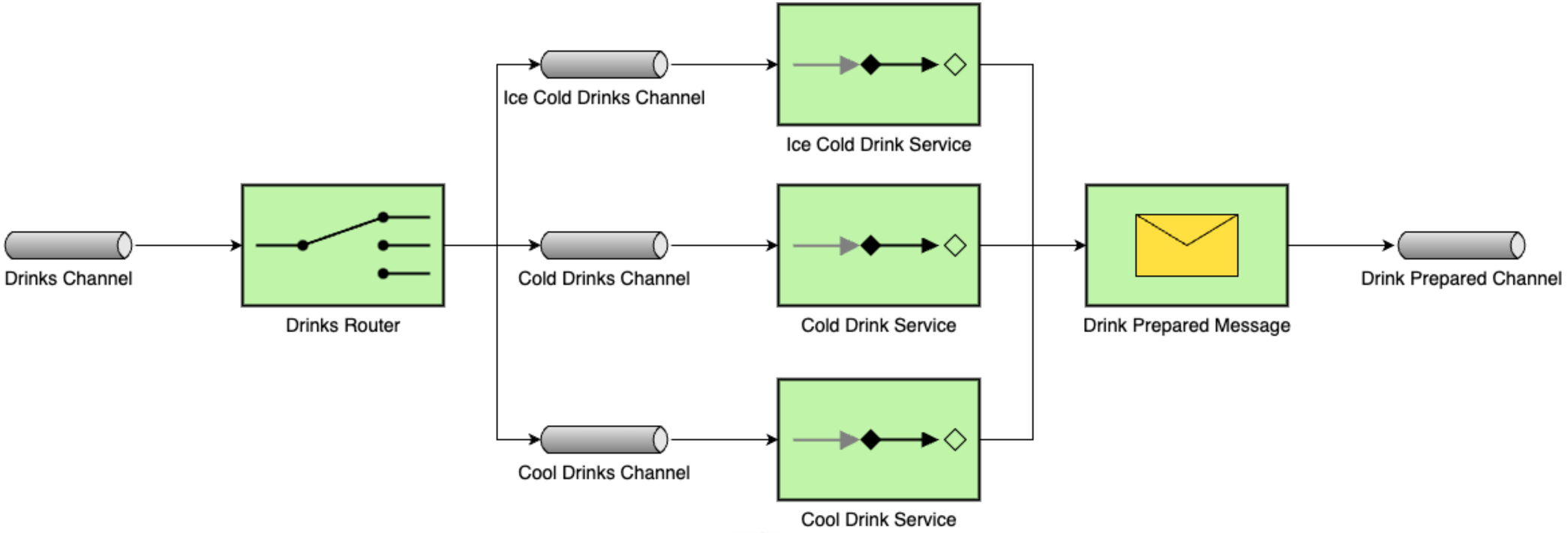

SPRING FRAMEWORK GURU 2024

EIP - Aggregation

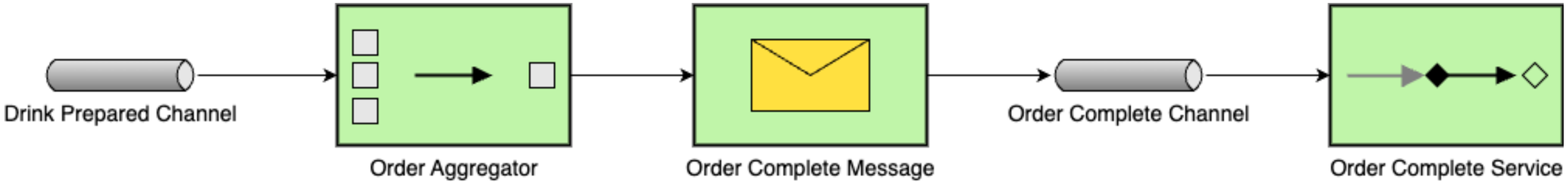

Next Steps

- Add Payment to Beer Order
  - Need to allow order to be updated with payment information
- Add Status to Beer Order Line - Enum (NEW, COMPLETE)
- Create Message Library
  - Shared Library for messages
- Create Spring Application Event for Order Placed on Payment
  - Send OrderPlaced Message to Kafka

Next Steps

- Create Order Splitter and Send Drink Order Events
- Create Drink Order Router
  - Send Drink Order to Proper topic for Drink Service
- Create Drink Services to process Drink Orders
  - Post Drink Order Processed Message to Kafka Topic
- Consume Drink Order Processed Message
  - Update Beer Order Line to COMPLETE

SPRING FRAMEWORK GURU