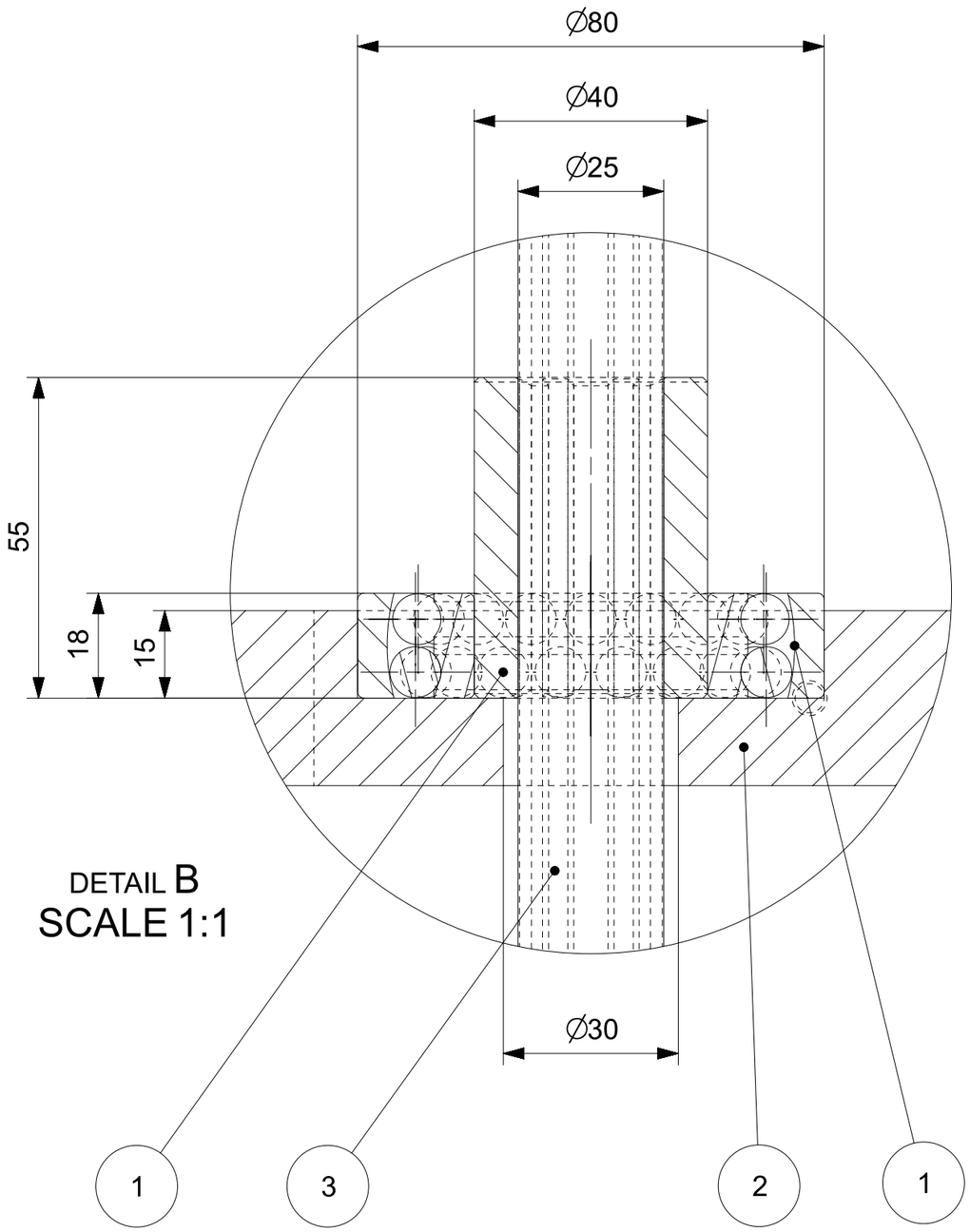

DETAIL B
SCALE 1:1

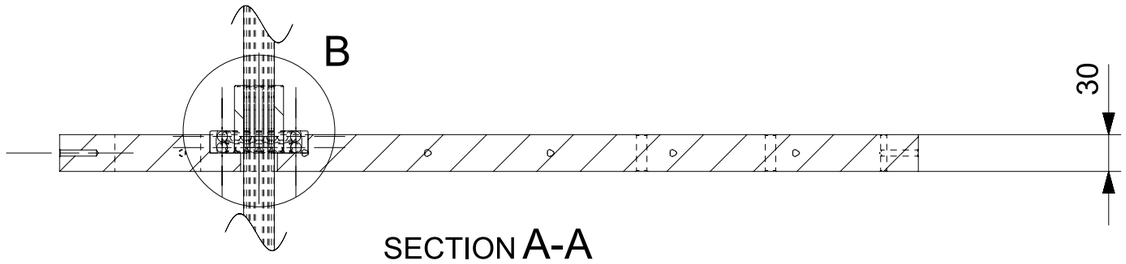

SECTION A-A

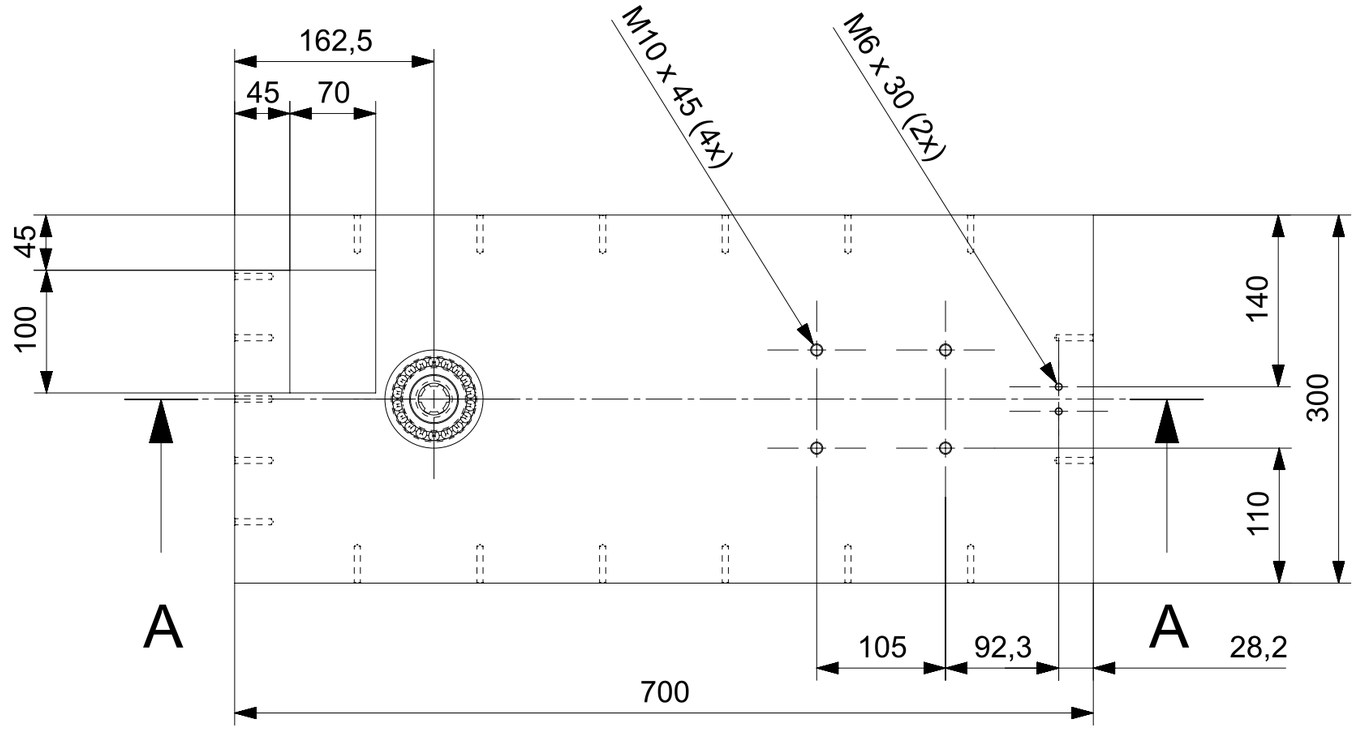

PC NO	PART NAME	QTY
1	Groefkogellager (M2.UPA2)	1
2	Onderste ondersteuningsplaat (M2.ULK2)	1

PC NO	PART NAME	QTY
3	Spline-as (M2.WQA1)	1
4	Gegroefde naaf ("splined hub") (M2.XNC5)	1

				IB3_M02_Assembly
SCALE	1:5	DRAWN BY	Tom Heyselberghs	COMMENTS
UNIT	MM	CHECKED BY		
DATE	29/03/2026	APPROVED BY		

KU LEUVEN

Zone Ondersteuningsplaat M2.ULK2

SHEET 1 OF 3