Vertical Farming Robot

EE3 - NED08

Client:

Address:

Created with IGE+XAO SEE Electrical School Version

IB3__SEE__NED08

Created with IGE+XAO SEE Electrical School Version

IGE+XAO GROUP		Title	Project: IB3_SEE_NED08_v19	Drawing no.:	Init.:	Rev.:	Sheet: 1
			Date: 01/04/2026	Function:	Location:	Total sheets: 32	Next sheet: 21

Page numbers: overview
Page 1 Title page
Page 2.x comments and plant layout
cabinet +U1
Page 3 title page
Page 4 main power
Page 5 PLC setup
Page 6.x PLC DI
Page 7.x PLC DQ
Page 8 Lamp connection
Page 9 ESTOP CPU
Page 10 ESTOP IO
Page 11 ESTOP Ethernet
Page 12 ESTOP Relay
Page 13 ESTOP EDM
AVG +U2
Page 14 Title page
Page 15 Main circuits
Page 16 Beckhoff busscoupler
Page 17.x Beckhoff connections
Page 18.x M0 drive
Page 19.x M1 drive
Page 20.x M2 drive

Created with IGE+XAO SEE Electrical School Version

Wire sections and color code:
Yellow / green: .Protective earth
Black: .2.5mm^2.Power circuit AC and DC
Light blue: .2.5mm^2.Neutral conductor of the AC power circuits
Red: .0.75mm^2.Control circuit AC
Dark blue.0.75mm^2: .Control circuit DC
Gray: .0.5mm^2.Analog/data signals
Orange: .1.5mm^2.NOT disconnected by the main switch

Created with IGE+XAO CE-Electrical School Version

— Logo —		Comments	Project: IB3__SEE__NED08__v19	Drawing no.:	Init.:	Rev.:	Sheet: 22
			Date: 23/02/2016	Function:	Location:	Total sheets: 32	Next sheet: 23

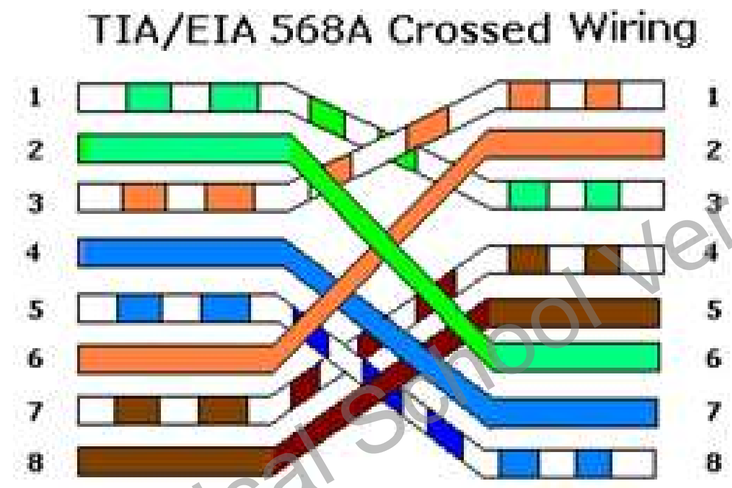

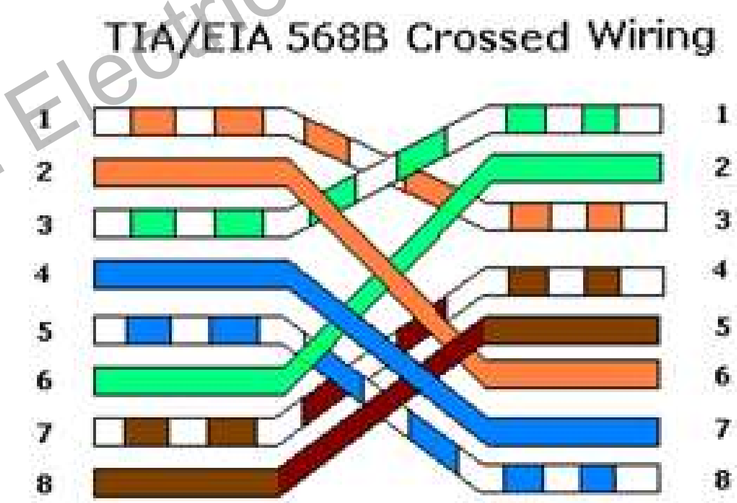

Figure A

Shows the Pin Out of Straight through Cables

Figure B

Shows the Pin Out of Crossover Cables

Created with IGE+XAO SEE Electrical School Version

In this project the cables are wired to the crossed 568A standard represented above

— Logo —		UTP	IB3__SEE__NED08__v19	Drawing no.:	Init.:	Rev.:	Sheet: 23
			Date: 1/12/2019	Function:	Location:	Total sheets: 32	Next sheet: 24

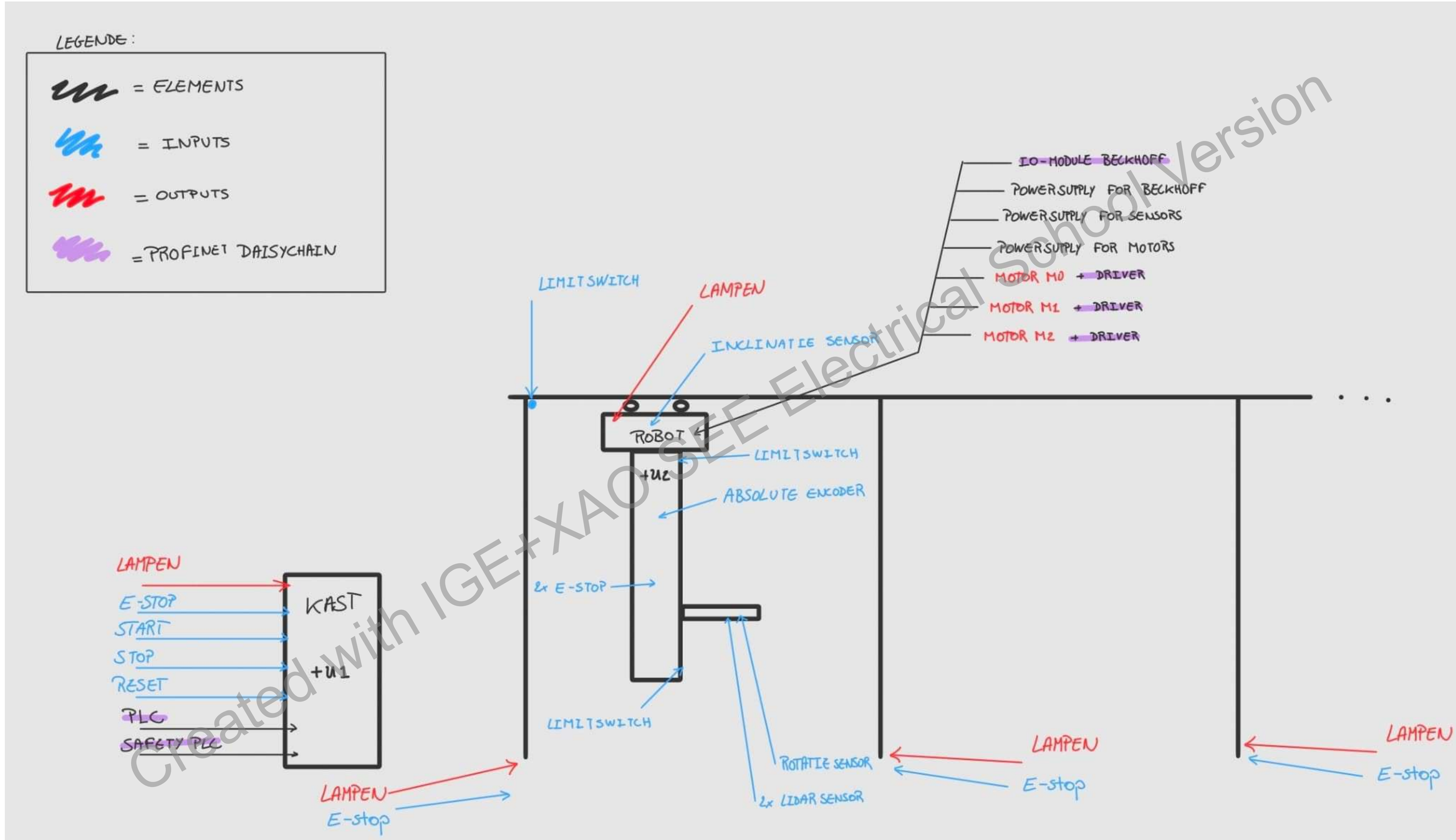

Created with IGE+XAO SEE Electrical School Version

IGE+XAO GROUP		Layout	Project: IB3_SEE_NED08_v19	Drawing no.:	Init.:	Rev.:	Sheet: 24
			Date: 01/04/2026	Function:	Location:	Total sheets: 32	Next sheet: 21

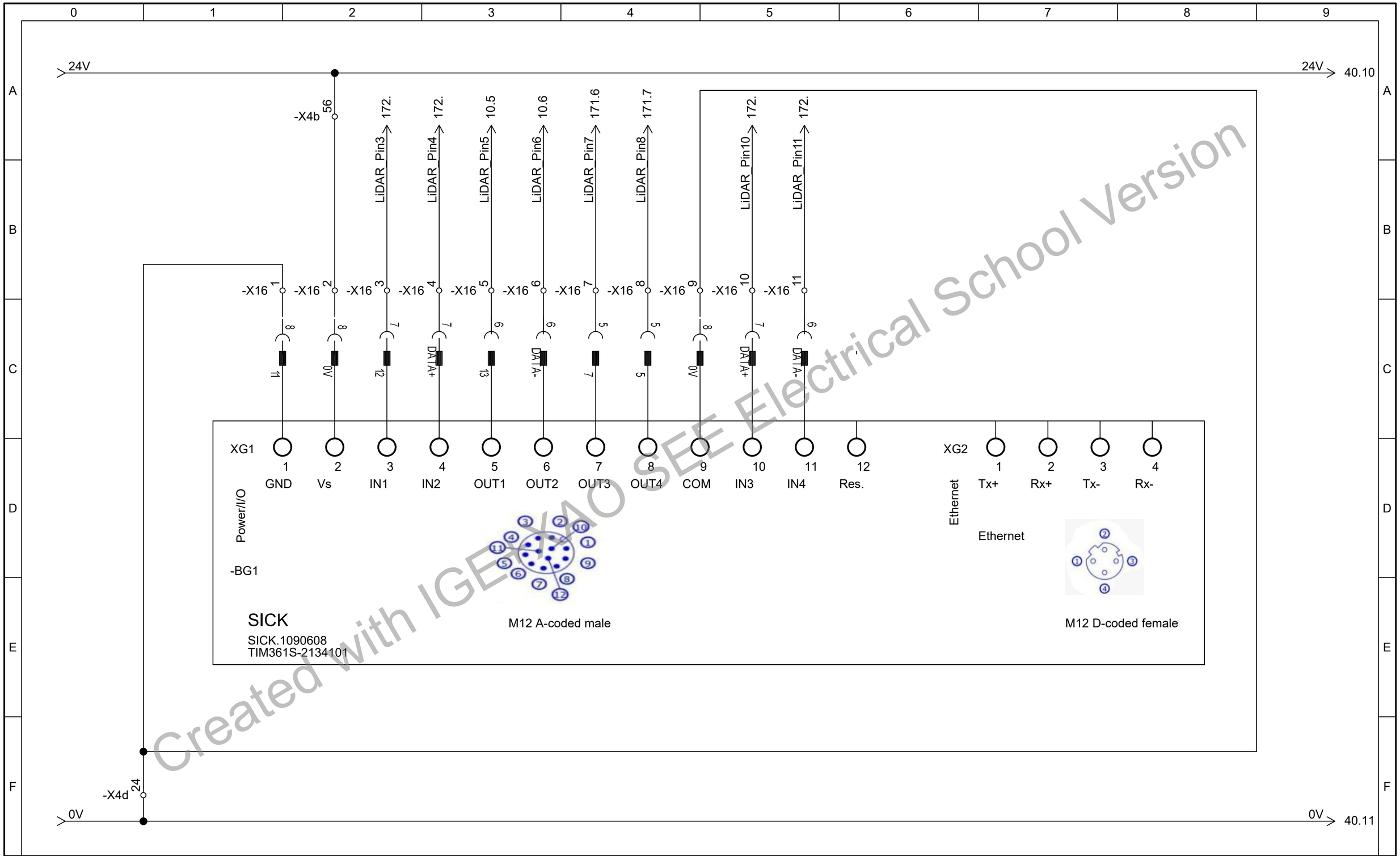

Created with IGE+XAO SEE Electrical School Version

IGE+XAO GROUP		M2.BGA1 & M2.BGA2 LiDAR	Project: IB3_SEE_NED08_v19	Drawing no.:	Init.:	Rev.:	Sheet: 21
			Date: 31/03/2026	Function:	Location: +U2	Total sheets: 32	Next sheet: 22

moet opnieuw

Function	Signal	Wire colour (flying leads)	9 pin D type plug	M12 8-way
Power	5 V	Brown	5	2
	0 V	White	9	8
Serial communication	CLK+ / MA+	Green	2	3
	CLK– / MA–	Yellow	3	4
	DATA+ / SLO+	Blue	6	7
	DATA– / SLO–	Red	7	6
Reserved	-	Pink	-	-
	-	Grey	-	-
Shield	Shield	Bare wire	Case	Case

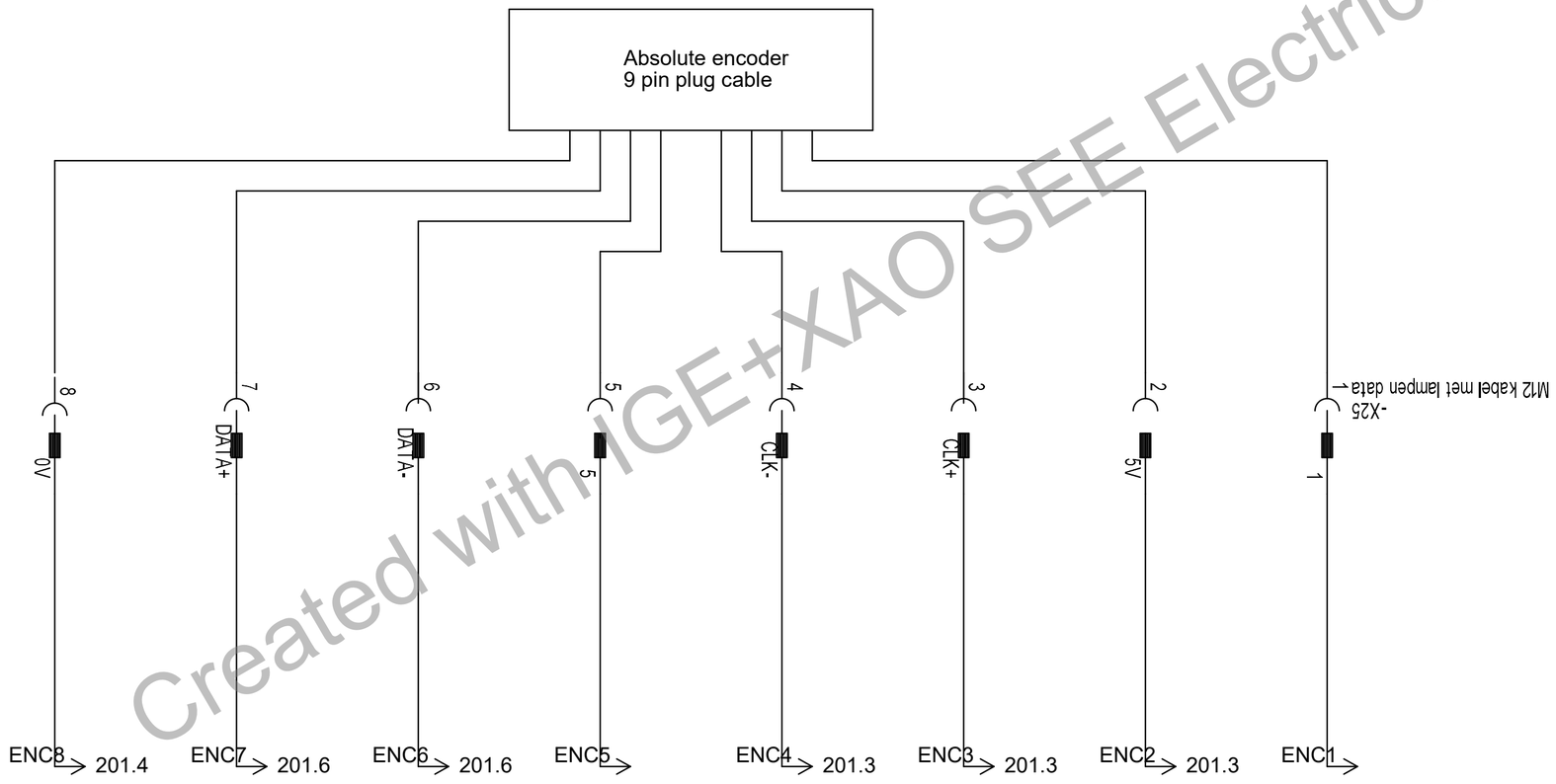

Created with IGE+XAO SEE Electrical School Version

IGE+XAO GROUP	Ringencoder M2.BGE1	Project: IB3_SEE_NED08_v19	Drawing no.:	Init.:	Rev.:	Sheet: 22
		Date: 27/03/2026	Function:	Location: +U2	Total sheets: 32	Next sheet: 30

Main Cabinet +U1

Created with IGE+XAO SEE Electrical School Version

IGE+XAO	Title +U1	Project: IB3_SEE_NED08_v19	Drawing no.:	Init.:	Rev.:	Sheet: 30	
		Date: 3/12/2019	Function:	Location: +U1	Total sheets: 32	Next sheet: 40	

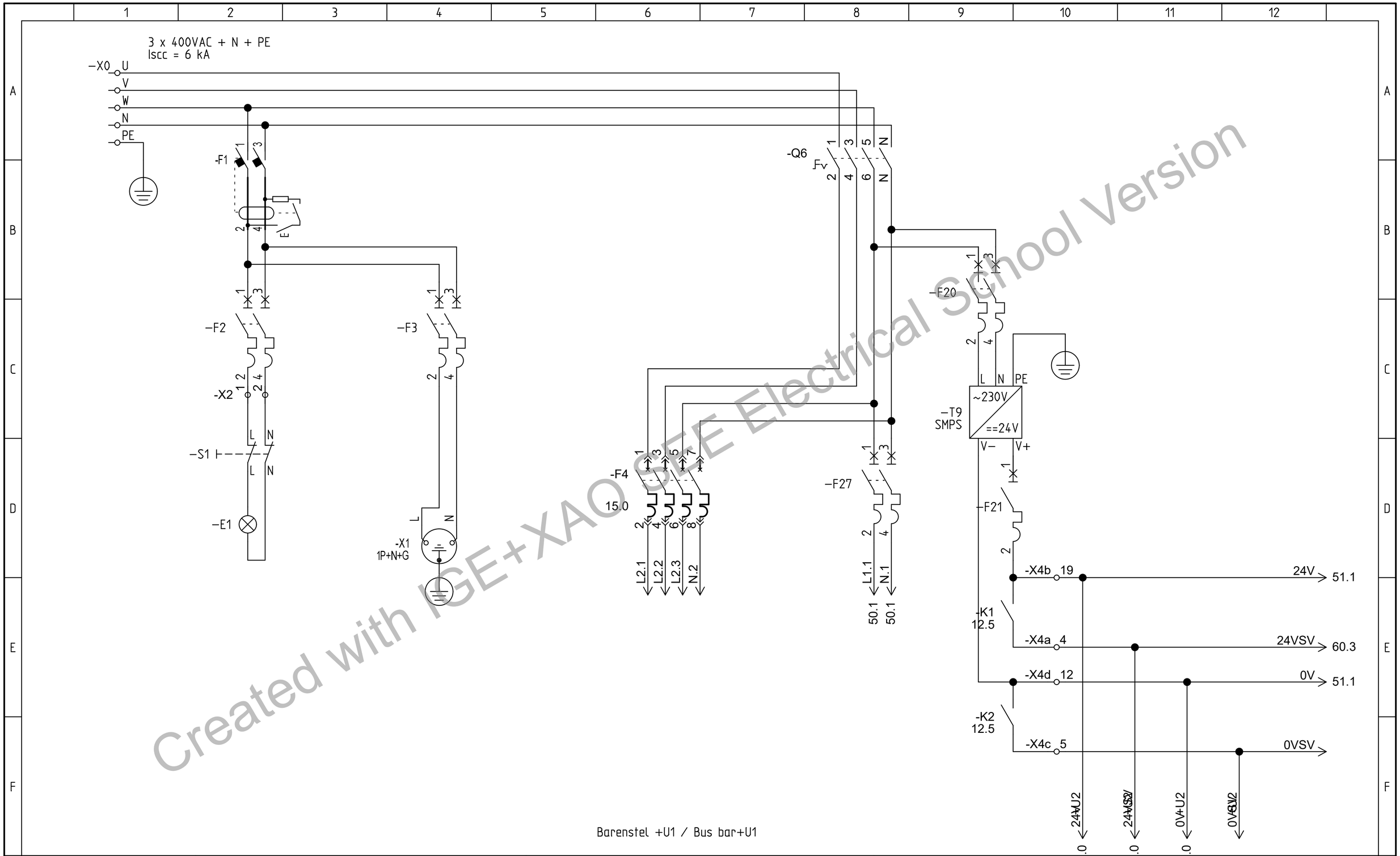

Created with IGE+XAO SEE Electrical School Version

— Logo —		Main power supply	Project: IB3__SEE__NED08__v19	Drawing no.:	Init.:	Rev.:	Sheet: 40
			Date: 13/03/2023	Function:	Location: +U1	Total sheets: 32	Next sheet: 50

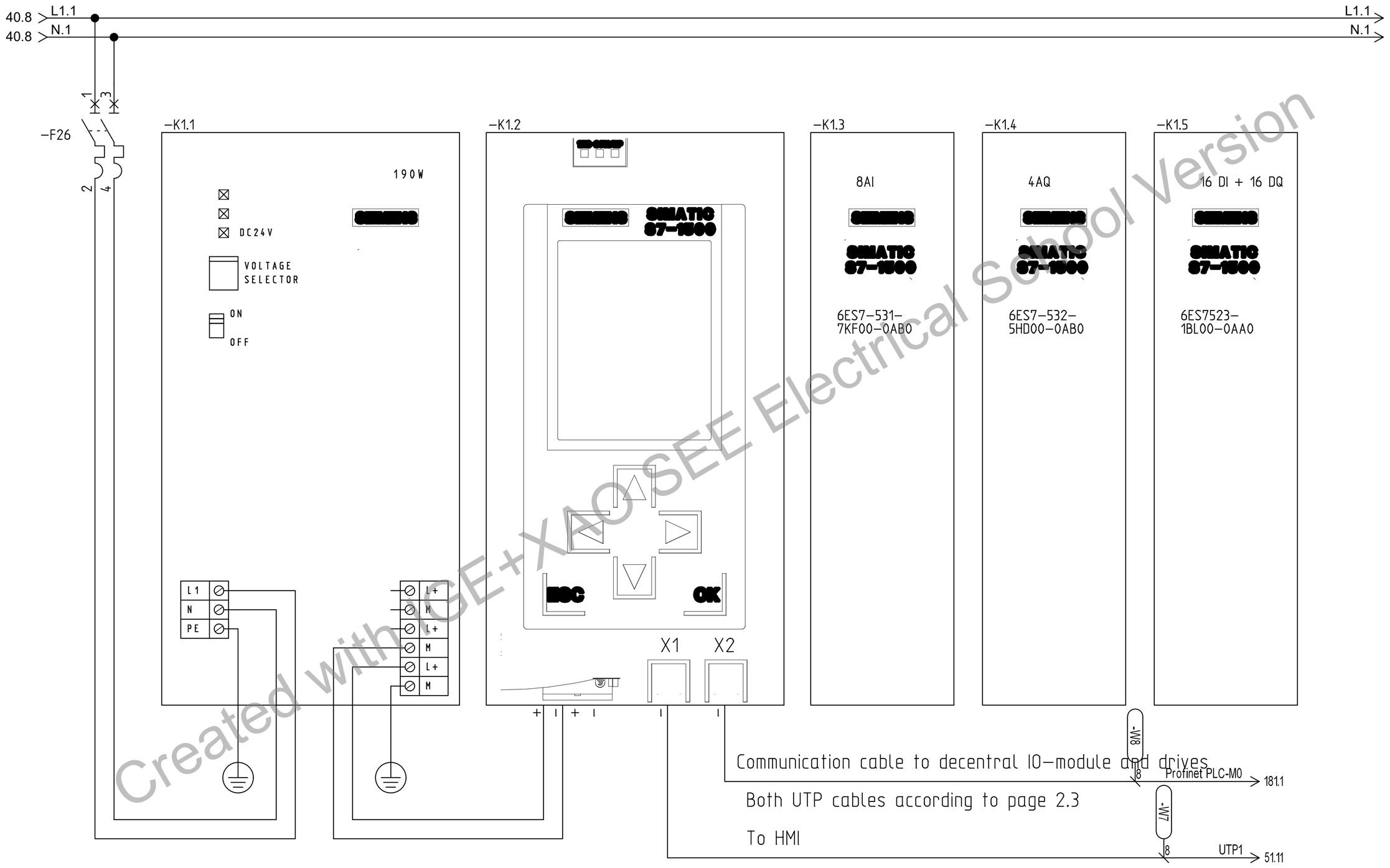

Created with CE+XAOSEE Electrical School Version

— Logo —		PLC setup	Project: IB3__SEE__NED08__v19	Drawing no.:	Init.:	Rev.:	Sheet: 50
			Date: 5/09/2015	Function:	Location: +U1	Total sheets: 32	Next sheet: 51

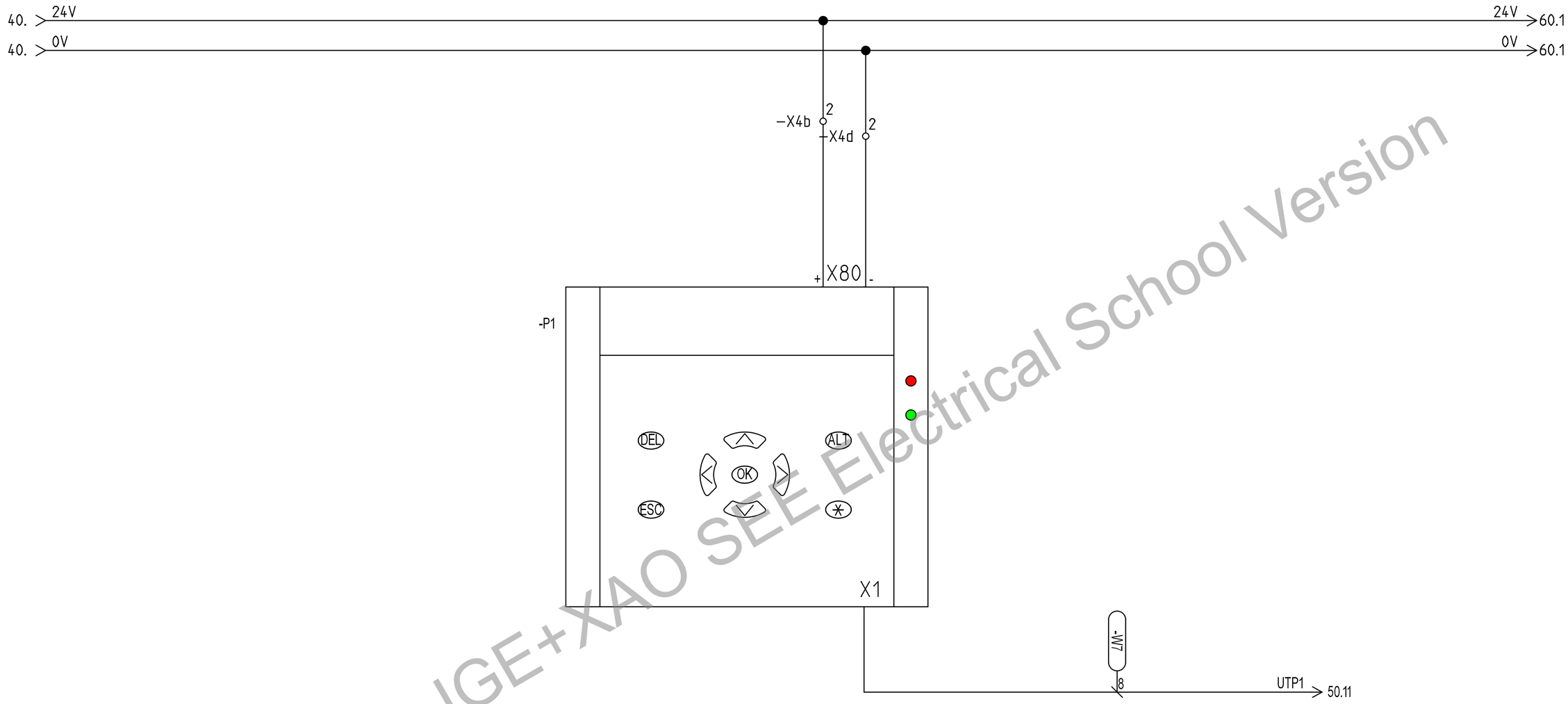

Created with IGE+XAO SEE Electrical School Version

— Logo —		HMI	Project: IB3__SEE__NED08__v19	Drawing no.:	Init.:	Rev.:	Sheet: 51
			Date: 3/12/2019	Function:	Location: +U1	Total sheets: 32	Next sheet: 60

nog volledig te doen

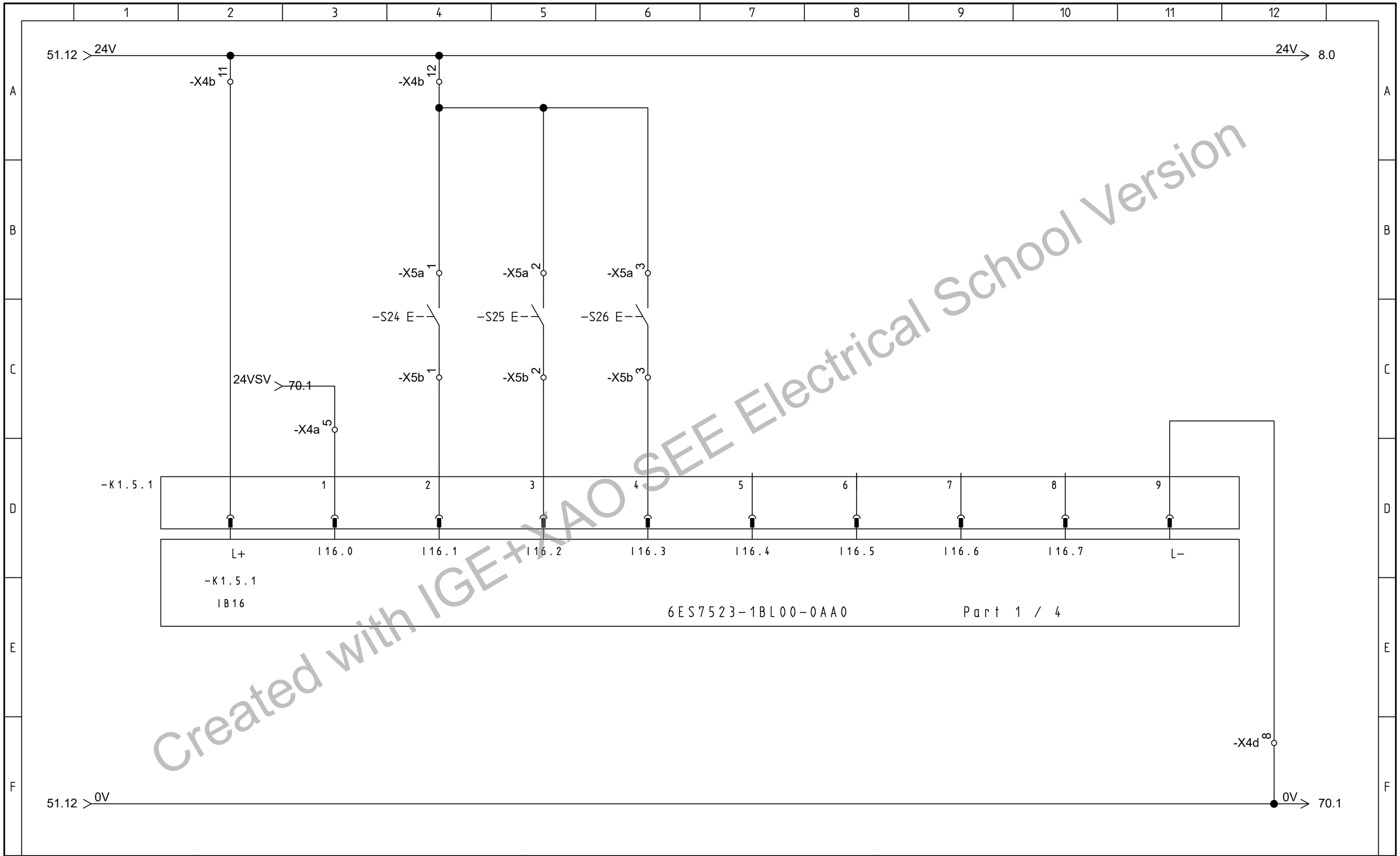

Created with IGE+XAO SEE Electrical School Version

— Logo —		PLC DI	IB3__SEE__NED08__v19	Project:	Drawing no.:	Init.:	Rev.:	Sheet: 60
				Date: 2/12/2019	Function:	Location: +U1	Total sheets: 32	Next sheet: 70

nog volledig te doen

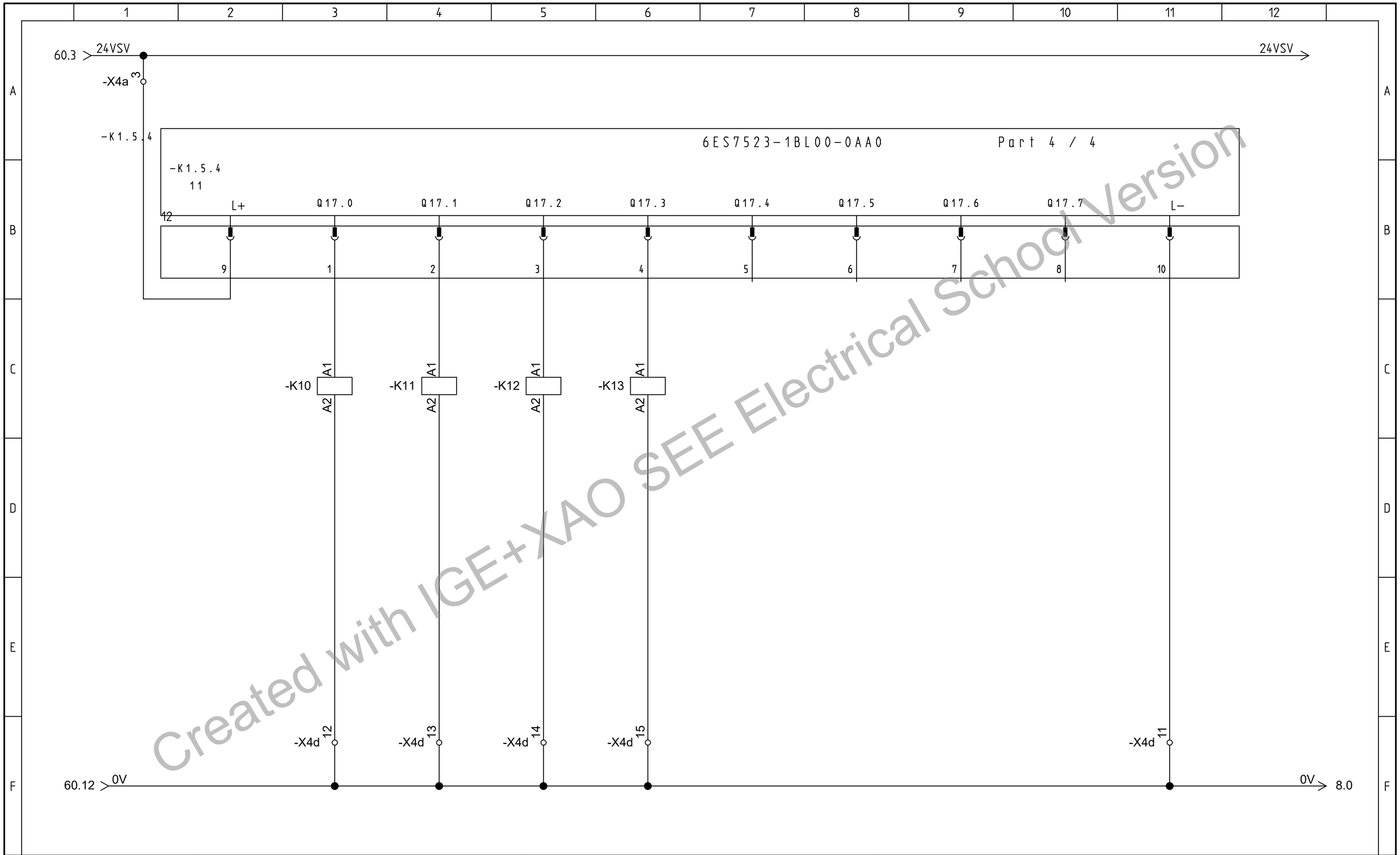

Created with IGE+XAO SEE Electrical School Version

— Logo —		PLC DQ	Project: IB3__SEE__NED08__v19	Drawing no.:	Init.:	Rev.:	Sheet: 70
			Date: 13/03/2023	Function:	Location: +U1	Total sheets: 32	Next sheet: 8

Dit is een eenmalige voorstelling van het verbindingsdiagram voor de gekozen lampen toren. deze zou zoals vermeld, naast op de stuurkast, ook op elke paal van de draagstructuur en 1x op de robot moeten komen

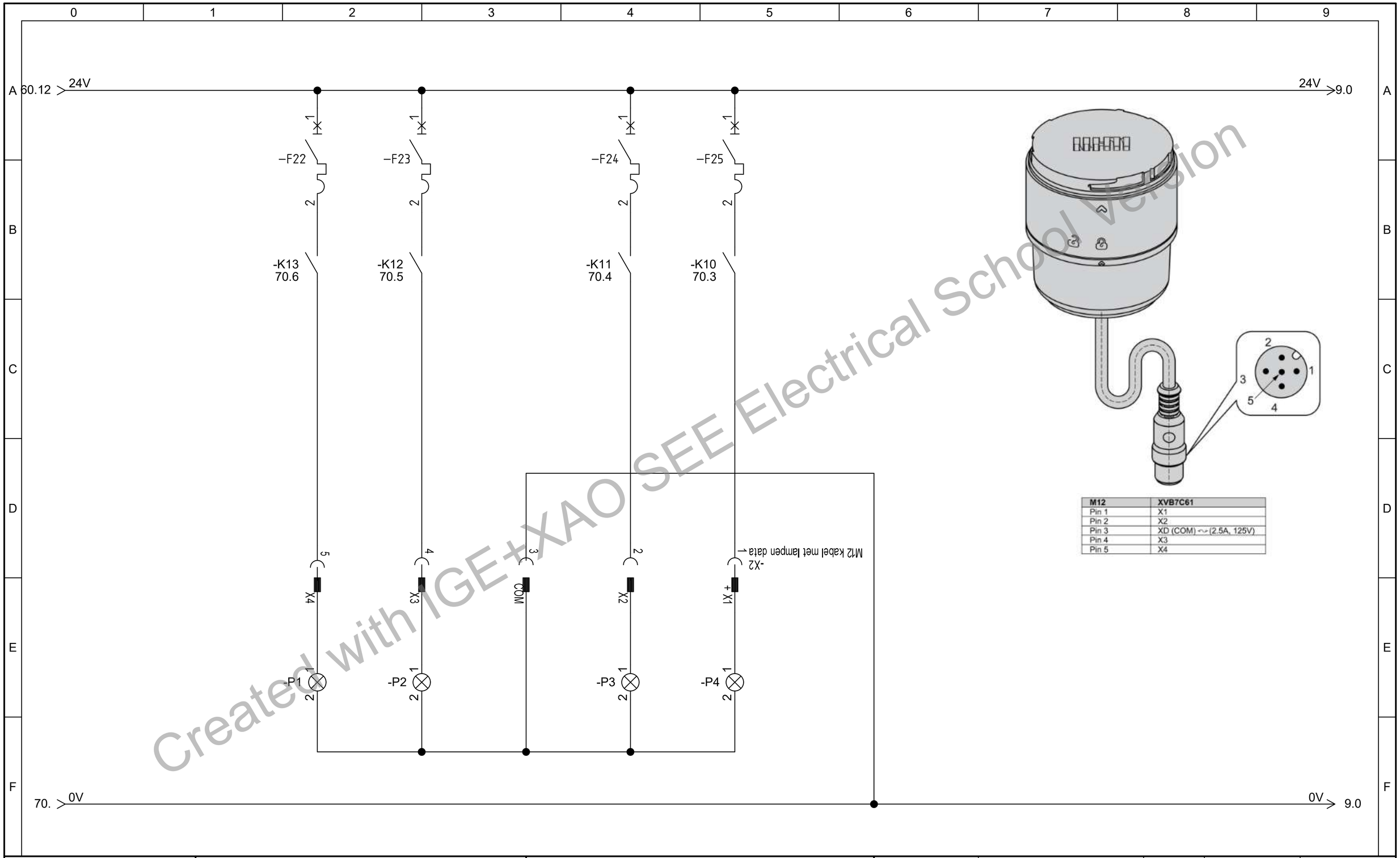

Created with IGE+XAO SEE Electrical School Version

IGE+XAO GROUP		Lamp Connections	Project: IB3_SEE_NED08_v19	Drawing no.:	Init.:	Rev.:	Sheet: 8
			Date: 25/03/2026	Function:	Location: +U1	Total sheets: 32	Next sheet: 9

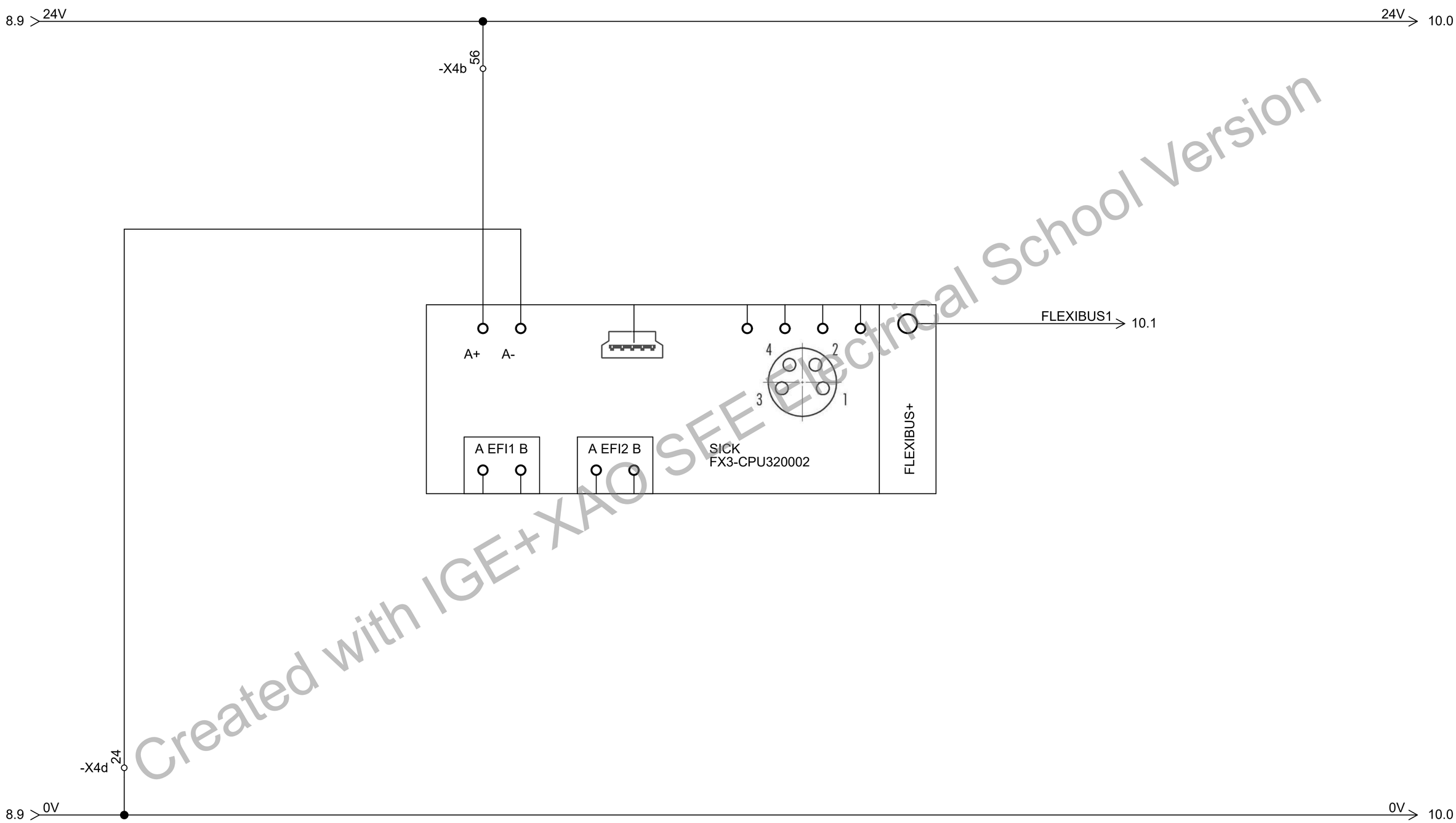

Created with IGE+XAO SEE Electrical School Version

IGE+XAO GROUP		ESTOP CPU module	Project: IB3_SEE_NED08_v19	Drawing no.:	Init.:	Rev.:	Sheet: 9
			Date: 31/03/2026	Function:	Location: +U1	Total sheets: 32	Next sheet: 10

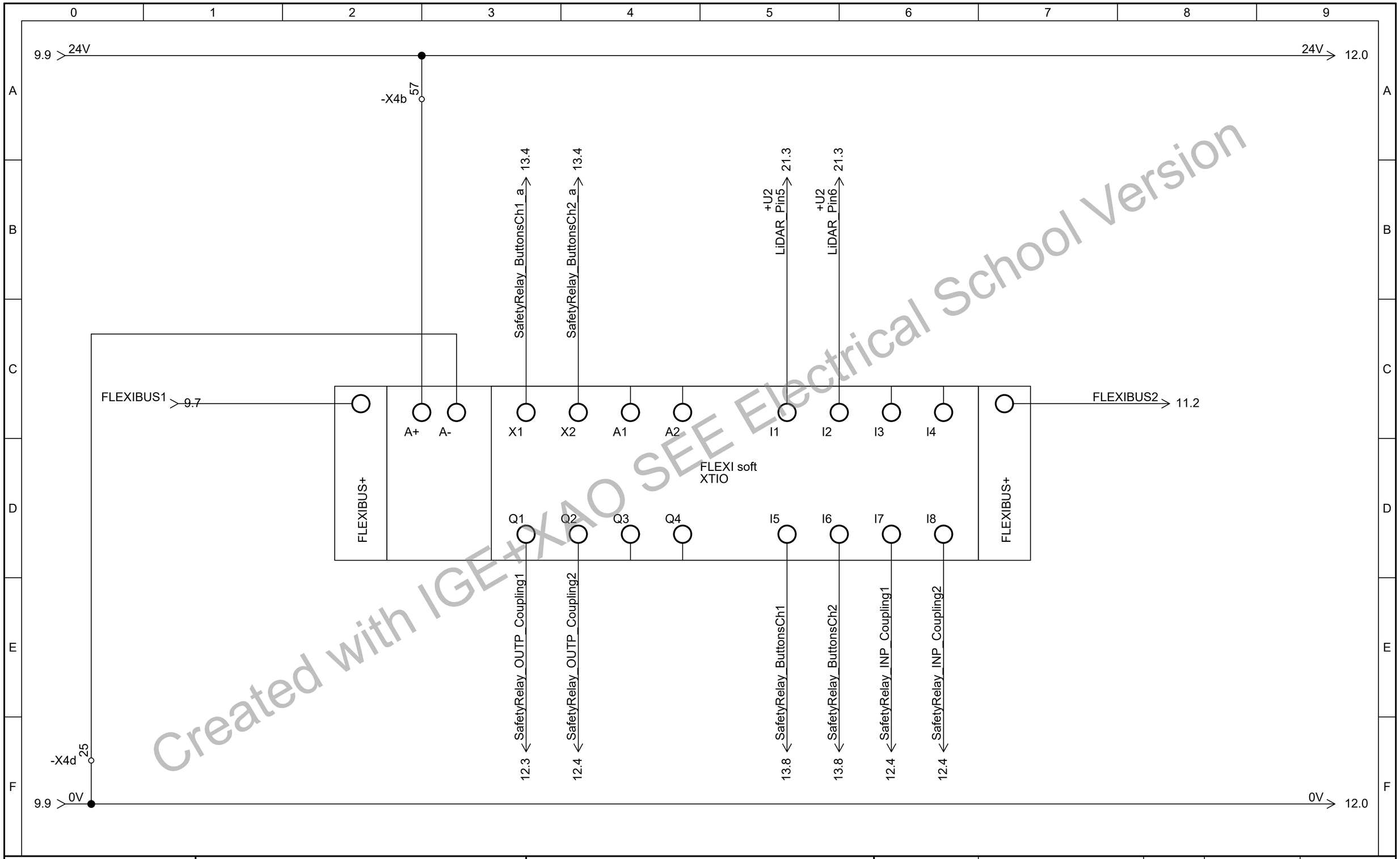

Created with IGE+XAO SEE Electrical School Version

IGE+XAO GROUP		ESTOP IO module	Project: IB3_SEE_NED08_v19	Drawing no.:	Init.:	Rev.:	Sheet: 10
			Date: 31/03/2026	Function:	Location: +U1	Total sheets: 32	Next sheet: 11

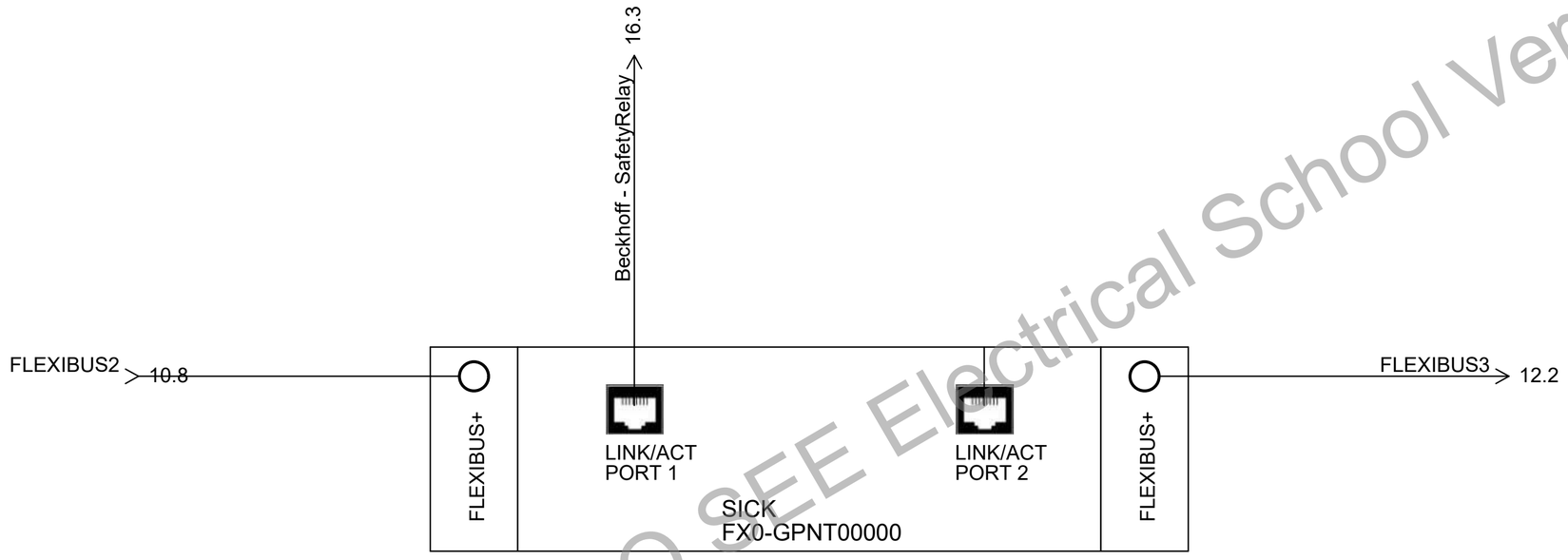

Created with IGE+XAO sEE Electrical School Version

IGE+XAO GROUP		ESTOP Ethernet module	Project: IB3_SEE_NED08_v19	Drawing no.:	Init.:	Rev.:	Sheet: 11
			Date: 31/03/2026	Function:	Location: +U1	Total sheets: 32	Next sheet: 12

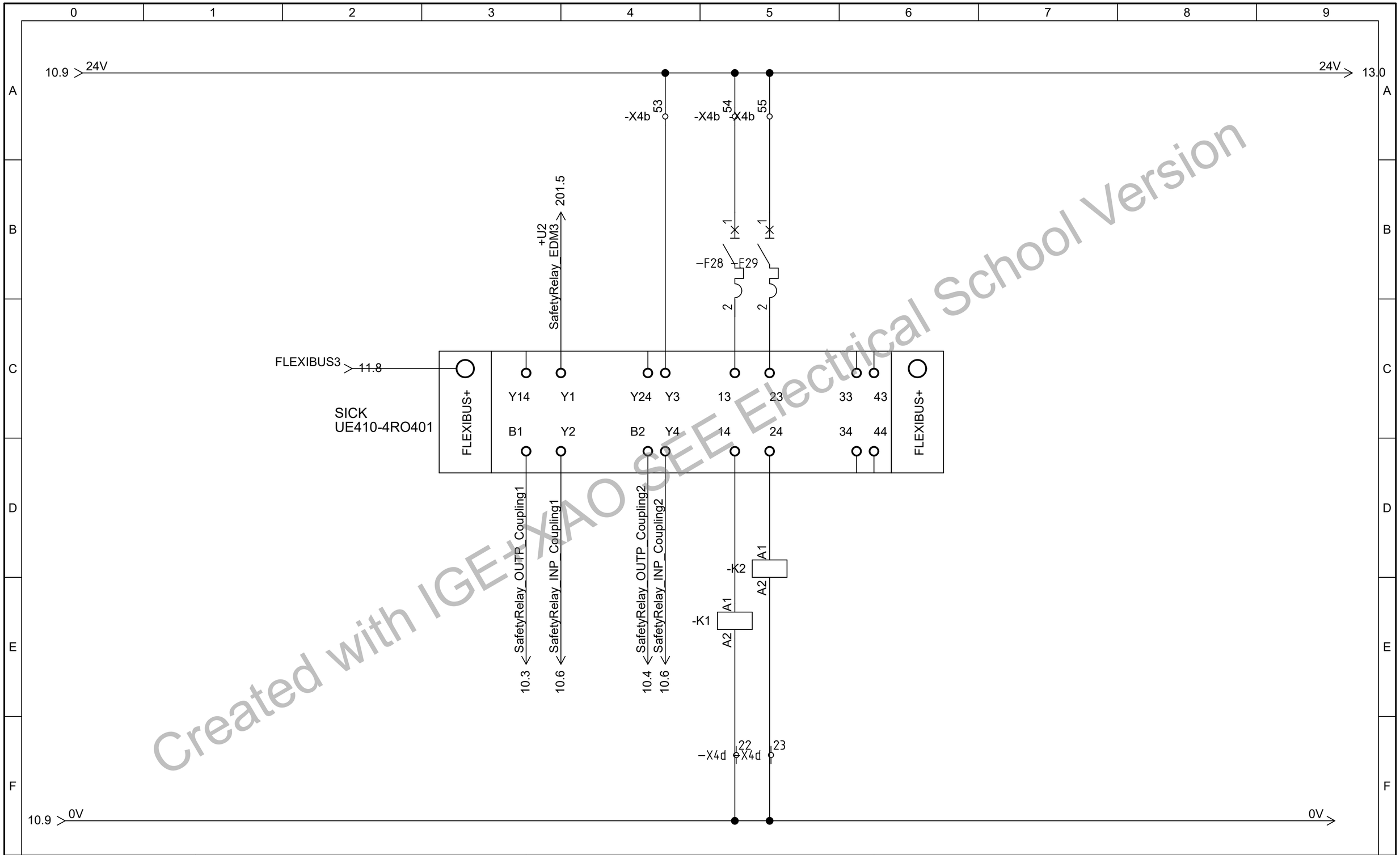

Created with IGE+XAO SEE Electrical School Version

IGE+XAO GROUP		ESTOP Relay module	Project: IB3_SEE_NED08_v19	Drawing no.:	Init.:	Rev.:	Sheet: 12
			Date: 1/04/2026	Function:	Location: +U1	Total sheets: 32	Next sheet: 13

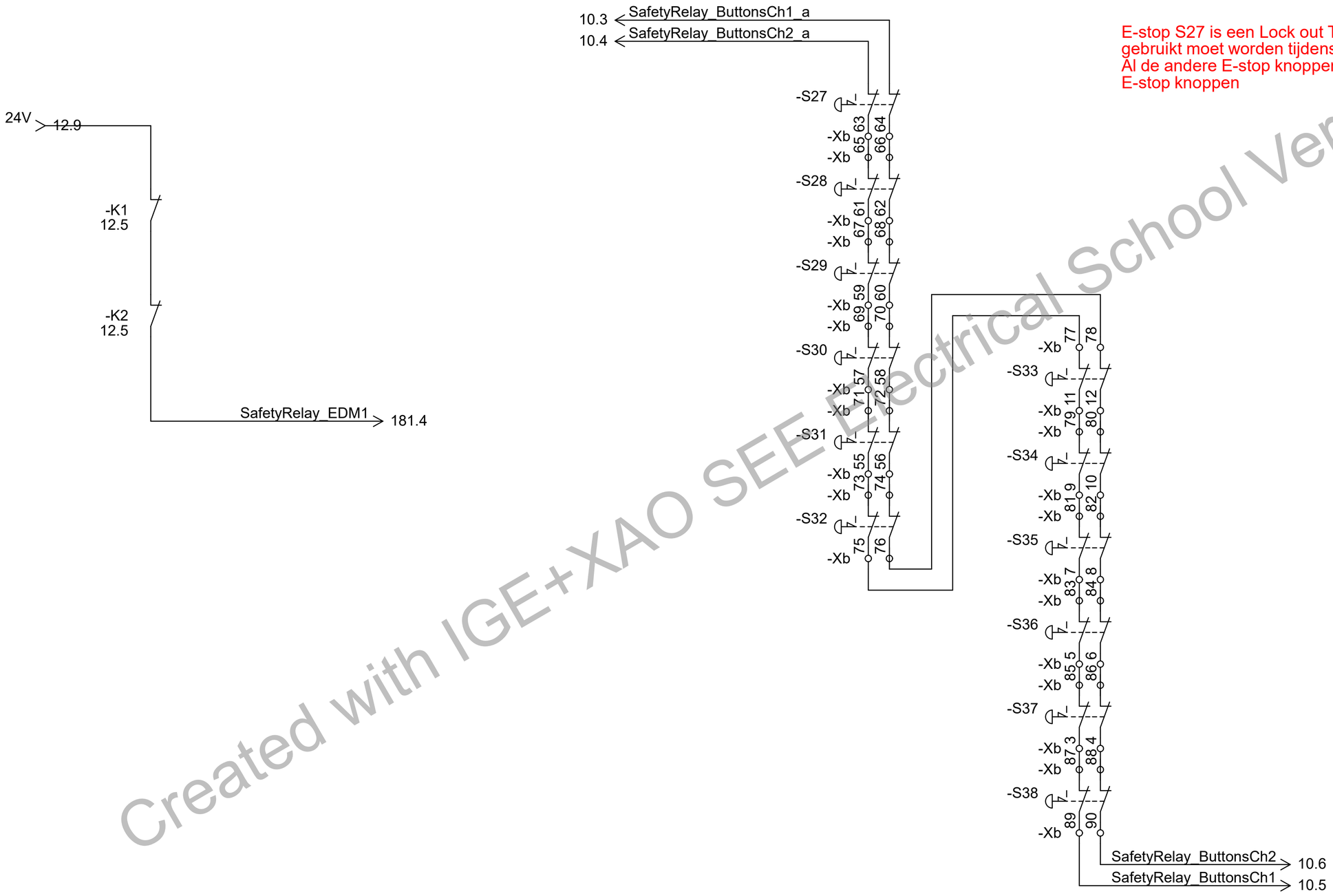

E-stop S27 is een Lock out Tag out E-stop die ook gebruikt moet worden tijdens onderhoud.
Al de andere E-stop knoppen zijn standaar dual-channel E-stop knoppen

Created with IGE+XAO SEE Electrical School Version

IGE+XAO GROUP	ESTOP EDM and Emergency Stop Buttons IB3_SEE_NED08_v19	Project:	Drawing no.:	Init.:	Rev.:	Sheet: 13
		Date: 1/04/2026	Function:	Location: +U1	Total sheets: 32	Next sheet: 14

AVG Cabinet +U2

Created with IGE+XAO SEE Electrical School Version

IGE+XAO	Title +U2	Project: IB3_SEE_NED08_v19	Drawing no.:	Init.:	Rev.:	Sheet: 14
		Date: 3/12/2019	Function:	Location: +U2	Total sheets: 32	Next sheet: 15

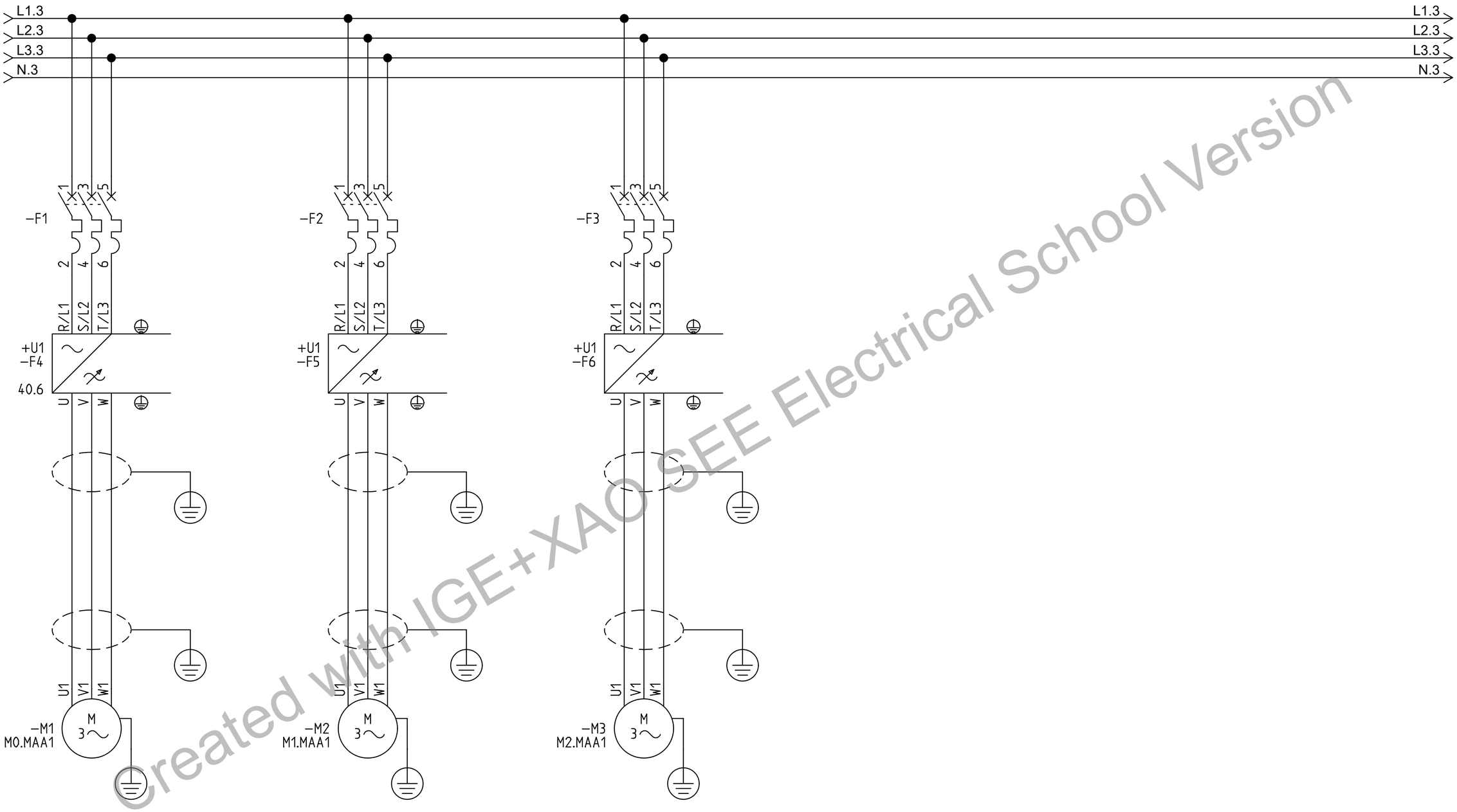

Created with IGE+XAO SEE Electrical School Version

IGE+XAO GROUP		Main circuits	Project: IB3_SEE_NED08_v19	Drawing no.:	Init.:	Rev.:	Sheet: 15
			Date: 28/02/2025	Function:	Location: +U2	Total sheets: 32	Next sheet: 16

voor communicatie met de PLC

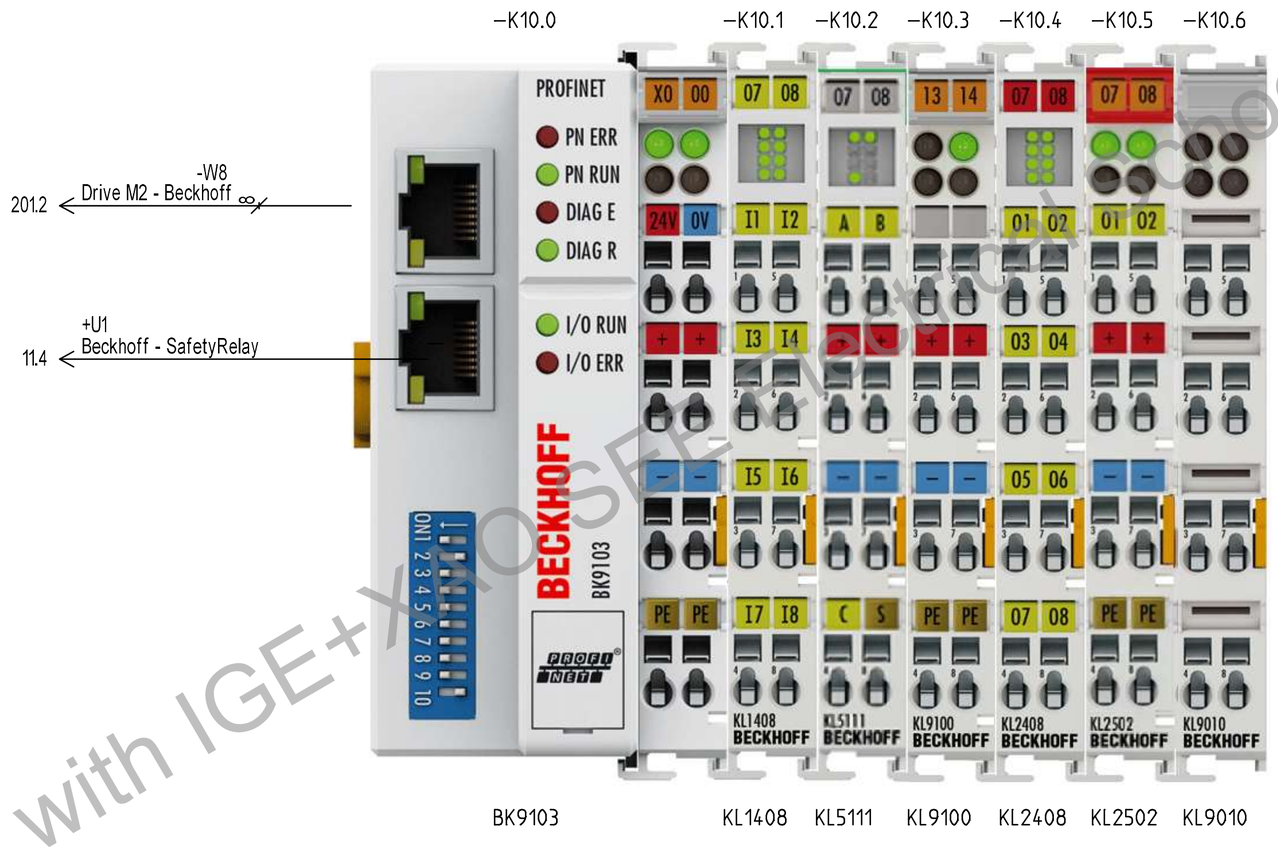

Created with IGE+XAO SEE Electrical School Version

— Logo —		Beckhoff buscoupler	Project: IB3__SEE__NED08__v19	Drawing no.:	Init.:	Rev.:	Sheet: 16
			Date: 2/05/2022	Function:	Location: +U2	Total sheets: 32	Next sheet: 170

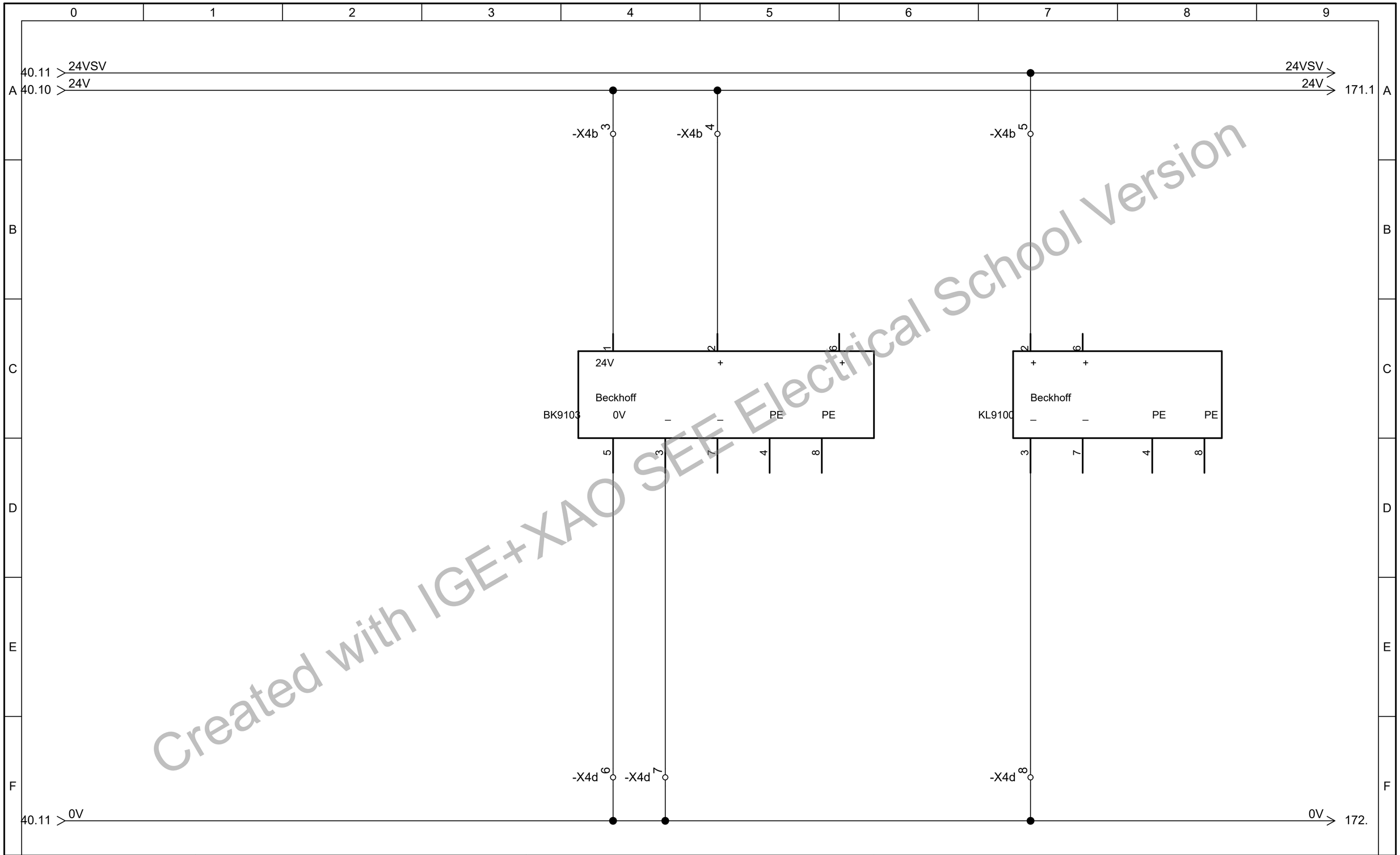

Created with IGE+XAO SEE Electrical School Version

IGE+XAO GROUP	Beckhoff Power (Main + KL9100)	Project: IB3_SEE_NED08_v19	Drawing no.:	Init.:	Rev.:	Sheet: 170
		Date: 27/03/2026	Function:	Location: +U2	Total sheets: 32	Next sheet: 171

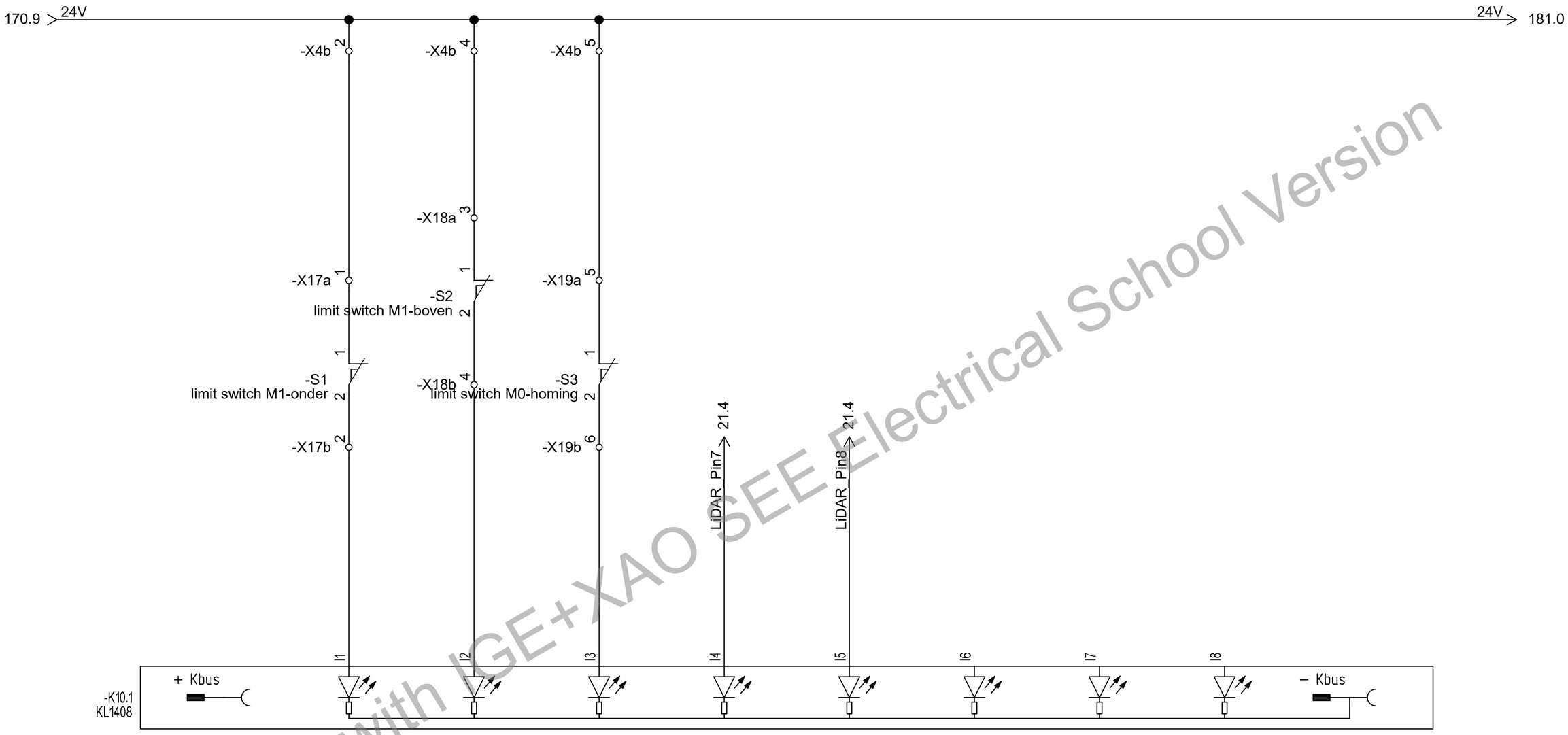

Created with IGE+XAO SEE Electrical School Version

— Logo —		Beckhoff DI	Project: IB3__SEE__NED08__v19	Drawing no.:		Init.:	Rev.:	Sheet: 17 1
			Date: 2/12/2019	Function:	Location: +U2		Total sheets: 32	Next sheet: 172

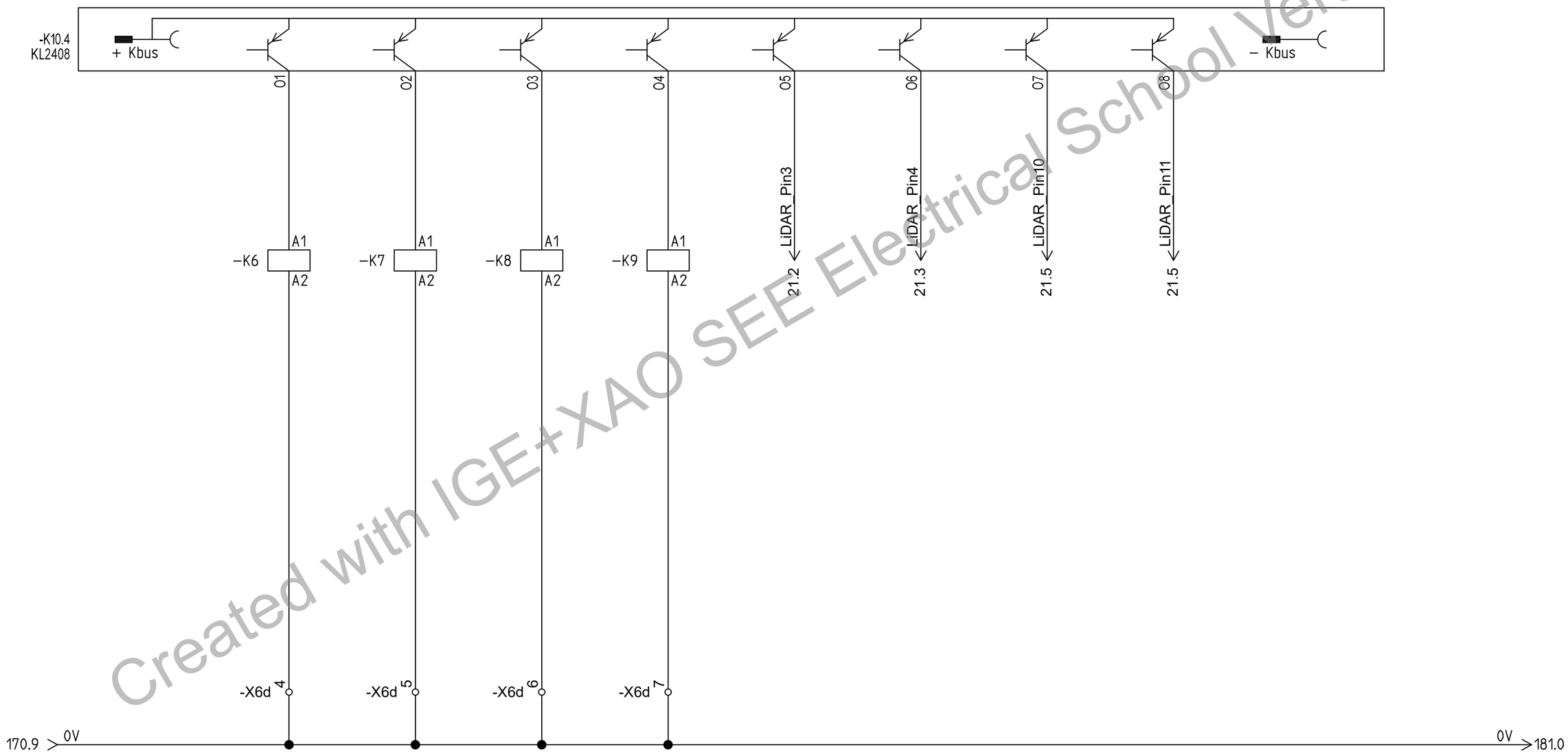

Created with IGE+XAO SEE Electrical School Version

– Logo –		Beckhoff DQ	Project: IB3__SEE__NED08__v19	Drawing no.:	Init.:	Rev.:	Sheet: 17 2
			Date: 2/12/2019	Function:	Location: +U2	Total sheets: 32	Next sheet: 180

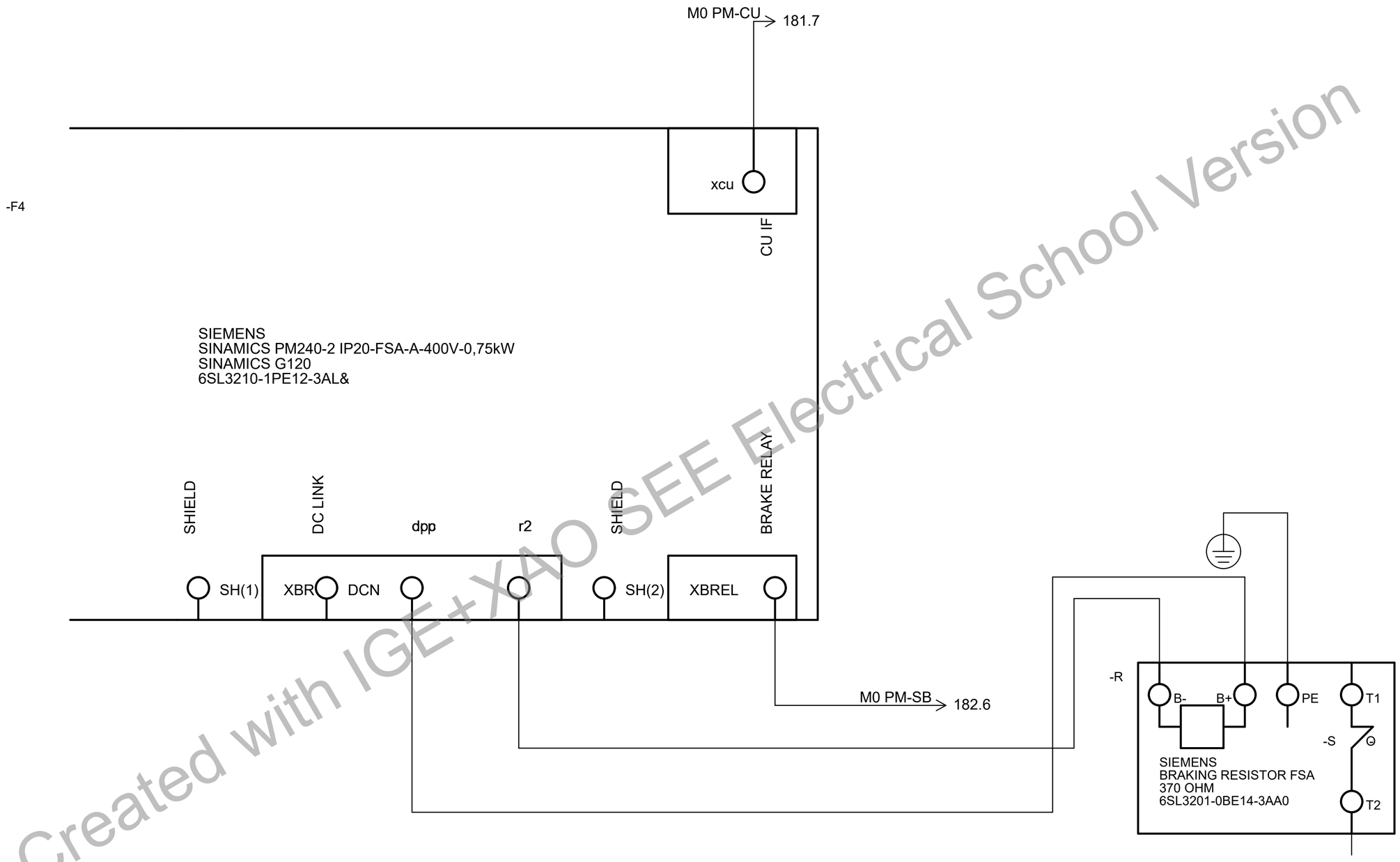

Created with IGE+XAO SEE Electrical School Version

IGE+XAO GROUP	Drive M0.MAA1 Power Module	Project: IB3_SEE_NED08_v19	Drawing no.:	Init.:	Rev.:	Sheet: 180	
		Date: 17/03/2026	Function:	Location: +U2	Total sheets: 32	Next sheet: 181	

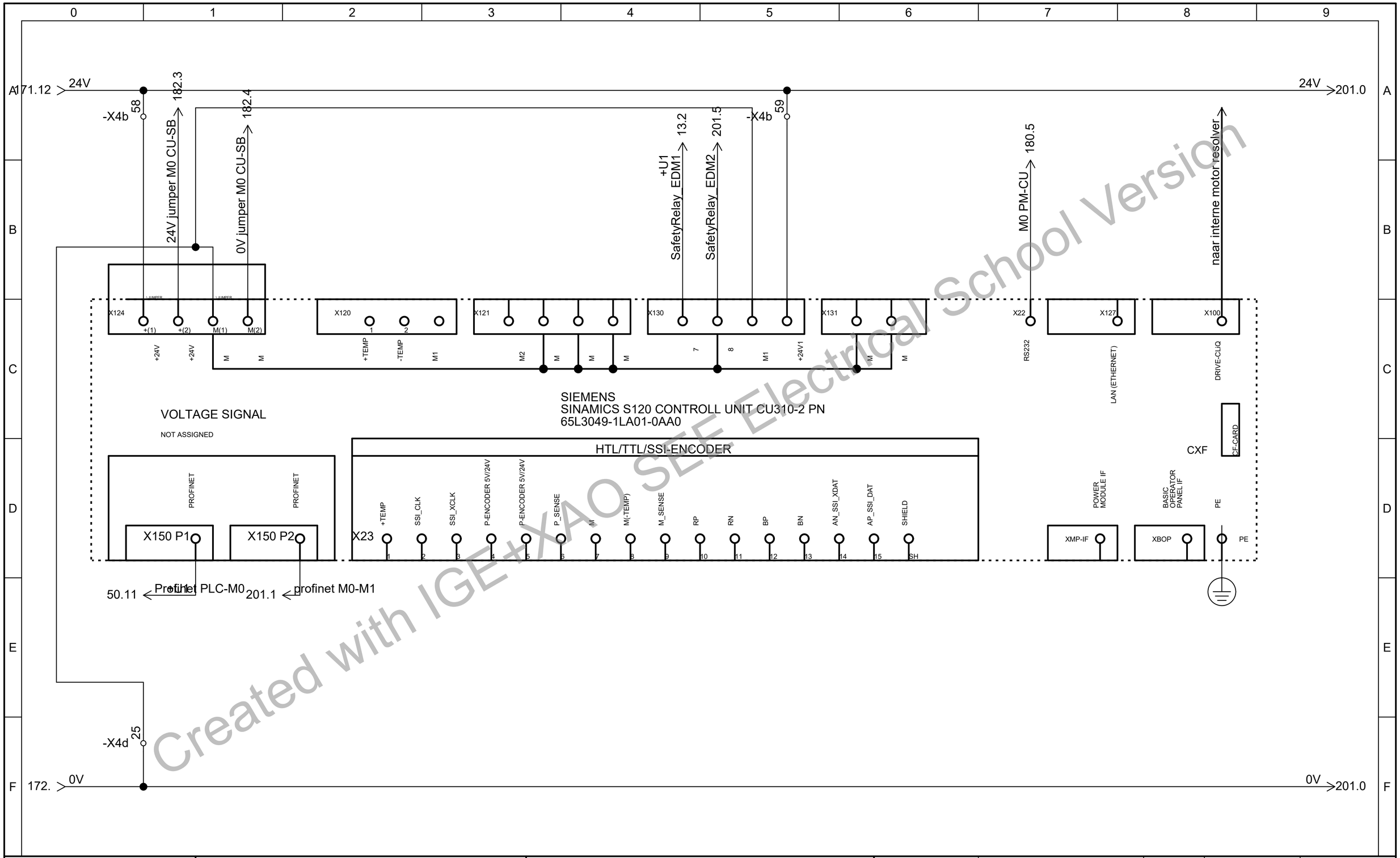

Created with IGE+XAO SEE Electrical School Version

IGE+XAO GROUP		Drive M0.MAA1 Control Unit	Project: IB3_SEE_NED08_v19	Drawing no.:	Init.:	Rev.:	Sheet: 181
			Date: 28/03/2026	Function:	Location: +U2	Total sheets: 32	Next sheet: 182

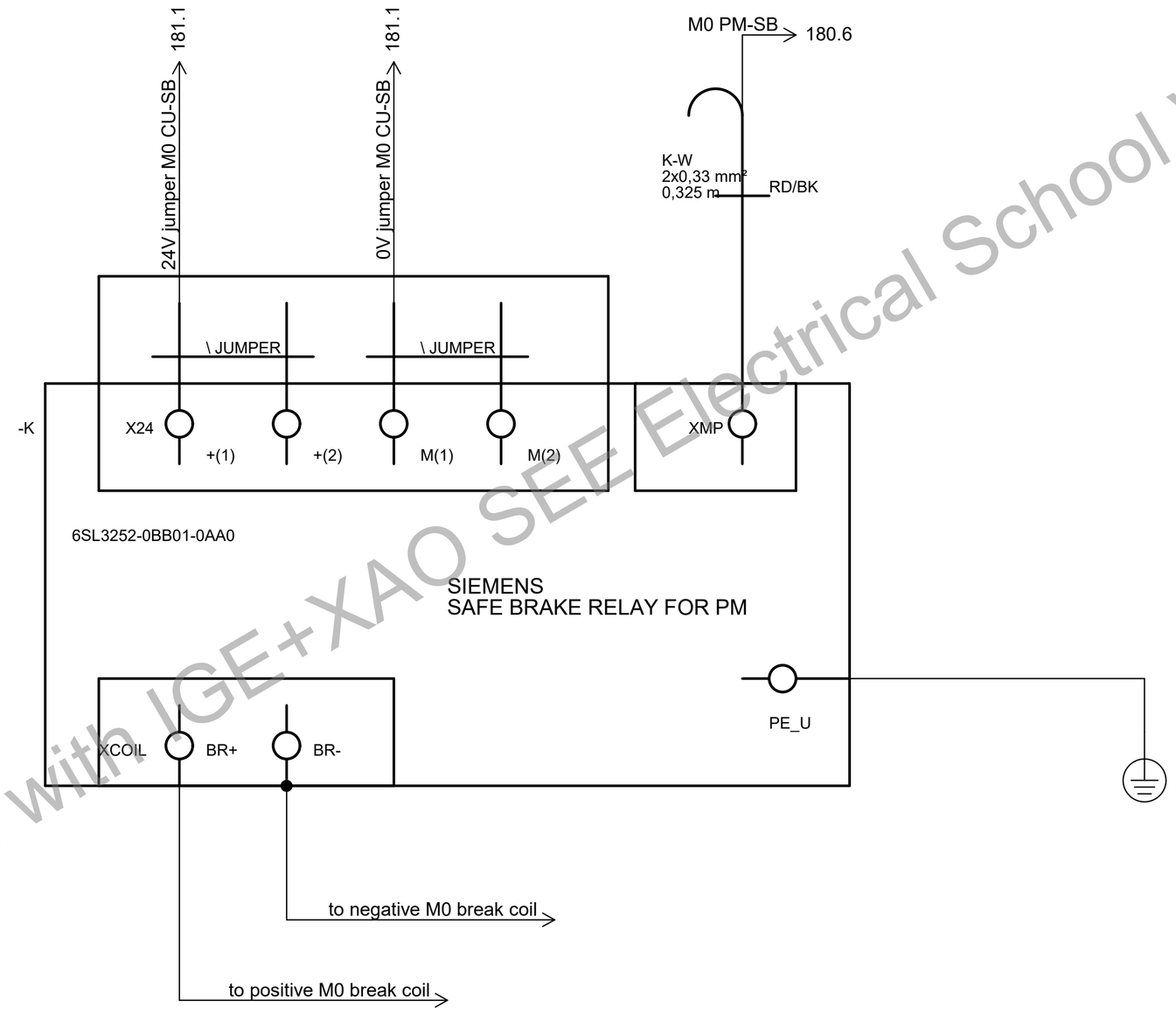

Created with IGE+XAO SEE Electrical School Version

IGE+XAO GROUP		Drive M0.MAA1 Safe Break	Project: IB3_SEE_NED08_v19	Drawing no.:	Init.:	Rev.:	Sheet: 182
			Date: 28/03/2026	Function:	Location: +U2	Total sheets: 32	Next sheet: 190

De drive gekozen door Teammate van M1 is: Panasonic MCDLN35NE

Na 10 minuten opzoekwerk vonden we dat deze niet EU-keuring heeft en deze geen veiligheidsports heeft.

wegens tijdsgebrek is deze drive ook niet verder aangesloten of een vervanging voor genomen.

Created with IGE+XAO SEE Electrical School Version

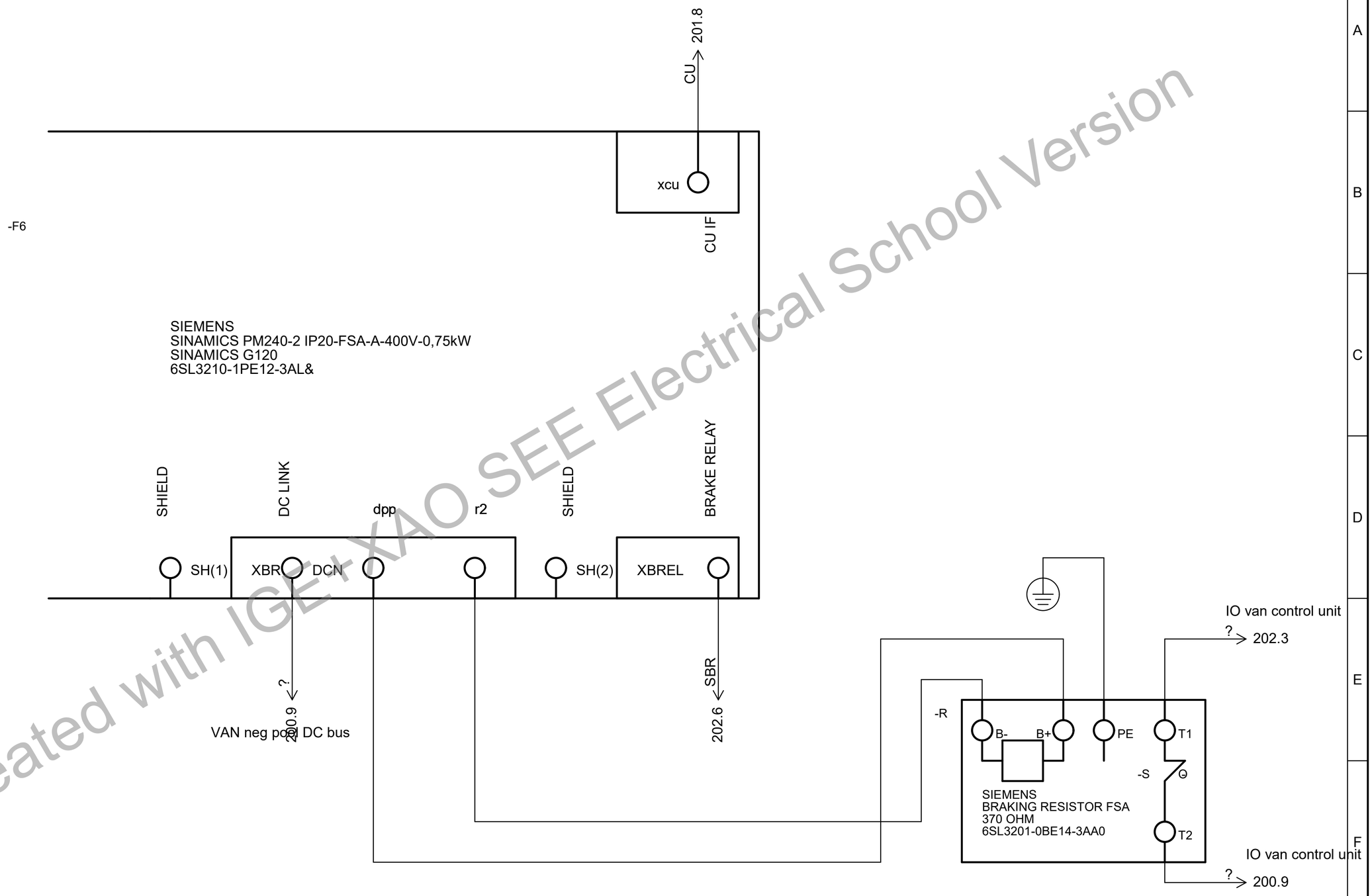

Created with IGE+XAO SEE Electrical School Version

IGE+XAO GROUP	Drive M2.MAA1 Power Module	Project: IB3_SEE_NED08_v19	Drawing no.:	Init.:	Rev.:	Sheet: 200
		Date: 17/03/2026	Function:	Location: +U2	Total sheets: 32	Next sheet: 201

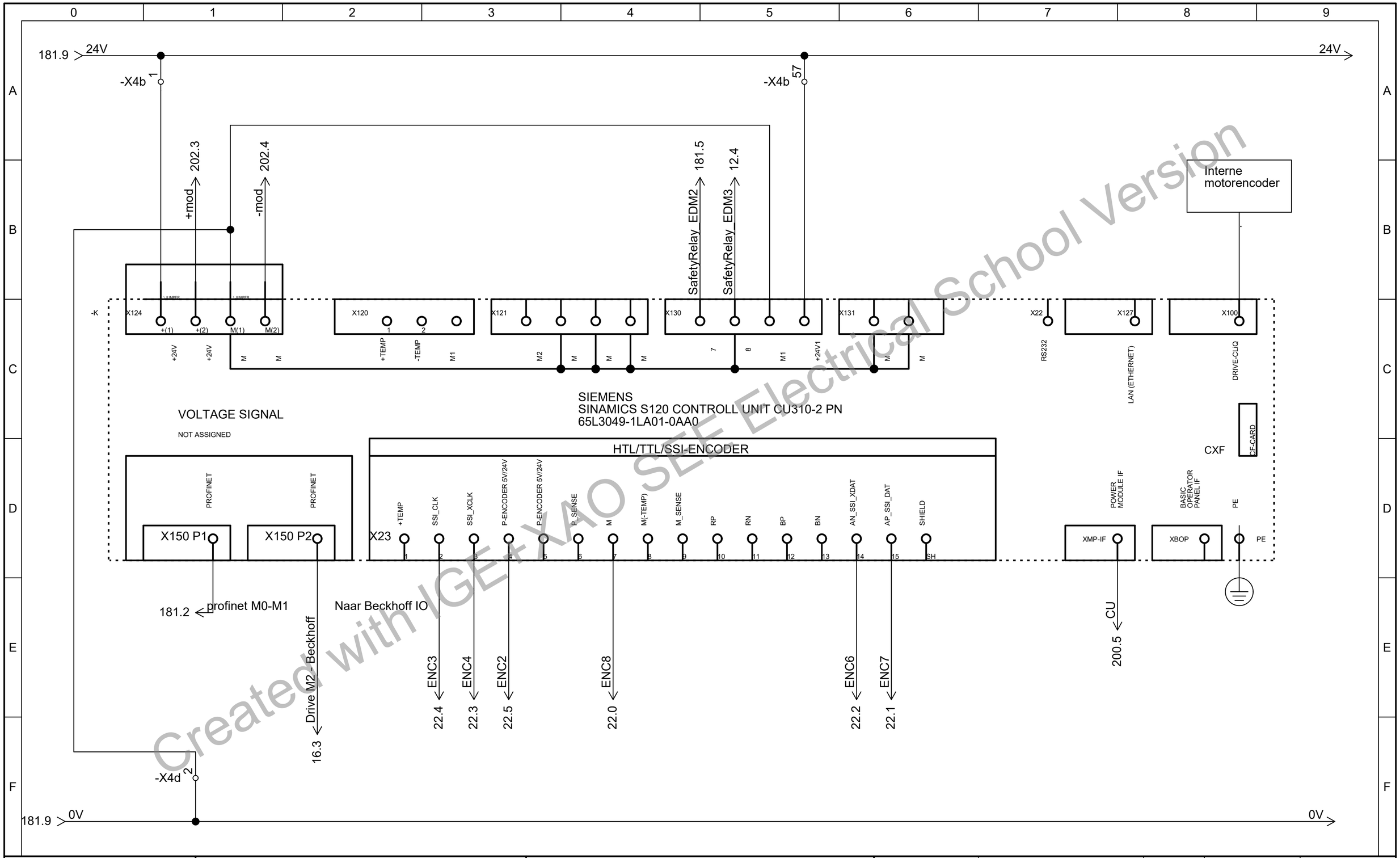

Created with IGE+XAO SEE Electrical School Version

IGE+XAO GROUP	Drive M2.MAA1 Control Unit	Project: IB3_SEE_NED08_v19	Drawing no.:	Init.:	Rev.:	Sheet: 201
		Date: 26/03/2026	Function:	Location: +U2	Total sheets: 32	Next sheet: 202

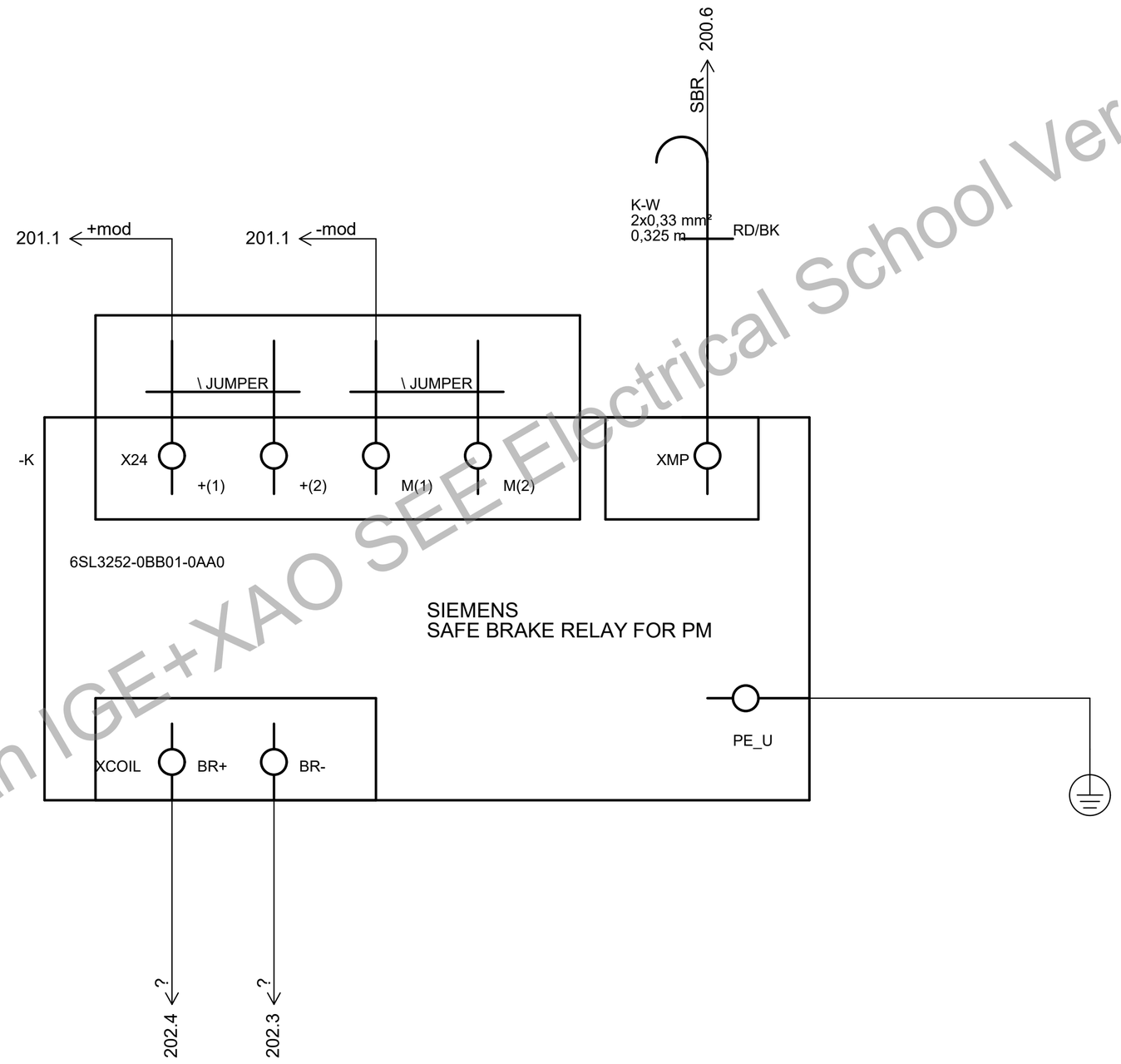

Created with IGE+XAO SEE Electrical School Version

IGE+XAO GROUP	Drive M2.MAA1 Safe Brake Relay	Project: IB3_SEE_NED08_v19	Drawing no.:	Init.:	Rev.:	Sheet: 202
		Date: 27/03/2026	Function:	Location: +U2	Total sheets: 32	Next sheet: 1

List of Terminals: -X0

Connection 1	Terminal	Connection 2	Type	Comment	Sheet	Cell
	U	+U1-F1:1			3 1	1
	V	+U1-Q1:3			3 1	1
	W	+U1-Q1:5			3 1	1
	N	+U1-F1:3			3 1	1
	PE				3 1	1

Created with IGE+XAO SEE Electrical School Version

IGE+XAO GROUP		-X0	Project: IB3_SEE_NED08_v19	Drawing no.:	Rev.:	Init.:
			Date: 05/03/2025	Function:	Location: +U1	Page: 1

List of Terminals: -X1

Connection 1	Terminal	Connection 2	Type	Comment	Sheet	Cell
+U1-F2:2	1	+U1-S1:L			3 1	2
+U1-F2:4	2	+U1-S1:N			3 1	2

Created with IGE+XAO SEE Electrical School Version

IGE+XAO GROUP		-X1	Project: IB3_SEE_NED08_v19	Drawing no.:	Rev.: / Init.:
			Date: 05/03/2025	Function:	Location: +U1 / Page: 2

List of Terminals: -X3

Connection 1	Terminal	Connection 2	Type	Comment	Sheet	Cell
	PE				3 1	10
+U1-Q3:1	1	+U2-X11:1			3 1	10
+U1-Q3:3	2	+U2-X11:2			3 1	10
	3	+U2-X11:3			3 1	10
	4	+U2-X11:4			3 1	10
+U1-F5:2	5	+U2-X11:5			3 1	12
+U1-F5:4	6	+U2-X11:6			3 1	12
+U1-F5:6	7	+U2-X11:7			3 1	12
+U1-F5:8	8	+U2-X11:8			3 1	12

Created with IGE+XAO SEE Electrical School Version

List of Terminals: -X4

Connection 1	Terminal	Connection 2	Type	Comment	Sheet	Cell
+U1-Q4:2	1	+U1-M1:U1			4 1	2
+U1-Q5:4	2	+U1-M1:V1			4 1	2
+U1-Q4:6	3	+U1-M1:W1			4 1	2

Created with IGE+XAO SEE Electrical School Version

IGE+XAO GROUP		-X4	Project: IB3_SEE_NED08_v19	Drawing no.:	Rev.: / Init.:
			Date: 05/03/2025	Function:	Location: +U1 / Page: 4

List of Terminals: -X5a

Connection 1	Terminal	Connection 2	Type	Comment	Sheet		Cell
+U1-K3:14	1	+U1-X7:2			4	1	9
+U1;24VSV	2	+U1-KT5			5	2	7
	3	+U1-T1:16			6	1	3
+U1-X7:2	4	+U1-K1.5.1:1			7	2	3
+U1;24VSV	5	+U1-K1.5.3:29			8	1	1

Created with IGE+XAO SEE Electrical School Version

List of Terminals: -X5b

Connection 1	Terminal	Connection 2	Type	Comment	Sheet		Cell
+U1-K3:13	1	+U1-X7:1			4	1	9
+U1;24V	2	+U1-P1:+			4	3	7
+U1;24V	3	+U1-F11:1			5	1	9
+U1;24V	4	+U1-F12:1			5	1	10
+U1;24V	5	+U1-F13:1			5	1	11
+U1;24V	6	+U1-T1:69			6	1	1
+U1;24V	7	+U1-T1:31			6	1	10
+U1;24V	8	+U1-K1.3:41			7	1	2
+U1;24V	9	+U1-K1.5.1:19			7	2	2
+U1;24V	10	+U1-X6a:1			7	2	4
+U1;24V	11	+U1-X10b:2			7	2	5
+U1;24V	12	+U1-K1.5.4:39			8	2	1

Created with IGE+XAO SEE Electrical School Version

List of Terminals: -X5c

Connection 1	Terminal	Connection 2	Type	Comment	Sheet	Cell
+U1-K4:14	1	+U1-X7:4			4 1	9
	2	+U1-T1:17			6 1	4

Created with IGE+XAO SEE Electrical School Version

List of Terminals: -X5d

Connection 1	Terminal	Connection 2	Type	Comment	Sheet		Cell
+U1-K4:13	1	+U1-X7:3			4	1	9
+U1;0V	2	+U1-P1:-			4	3	7
+U1-K2:B2	3	+U1;0V			5	1	2
+U1-K3:A2	4	+U1;0V			5	1	9
+U1-Q2:A2	5	+U1;0V			5	2	7
+U1-T1:32	6	+U1;0V			6	1	9
+U1-K1.3:44	7	+U1;0V			7	1	12
+U1-K1.5.1:20	8	+U1;0V			7	2	12
+U1-Q5:A2	9	+U1;0V			8	1	3
+U1-K1.5.3:30	10	+U1;0V			8	1	11
+U1-K1.5.4:40	11	+U1;0V			8	2	11

Created with IGE+XAO SEE Electrical School Version

List of Terminals: -X6a

Connection 1	Terminal	Connection 2	Type	Comment	Sheet	Cell
+U1-X5b:10	1	+U1-S5			7 2	4
	2	+U1-S2			5 1	5
+U1-K2:S22	3	+U1-S3			5 1	8
+U1-S3	4	+U1-X6a:5			5 1	8
+U1-X6a:4	5	+U1-S4			5 1	8
+U1-S4	6	+U1-K2:S21			5 1	8

Created with IGE+XAO SEE Electrical School Version

List of Terminals: -X6b

Connection 1	Terminal	Connection 2	Type	Comment	Sheet	Cell
+U1-S5	1	+U1-K1.5.1:2			7 2	4
+U1-S2	2	+U1-K2:Y2			5 1	5
+U1-K2:S12	3	+U1-S3			5 1	8
+U1-S3	4	+U1-X6b:5			5 1	8
+U1-X6b:4	5	+U1-S4			5 1	8
+U1-S4	6	+U1-K2:S11			5 1	8

Created with IGE+XAO SEE Electrical School Version

List of Terminals: -X7

Connection 1	Terminal	Connection 2	Type	Comment	Sheet		Cell
+U1-X5b:1	1	+U2-X16:1			4	1	10
+U1-X5a:1	2	+U2-X16:2			4	1	10
+U1-X5d:1	3	+U2-X16:3			4	1	11
+U1-X5c:1	4	+U2-X16:4			4	1	11
+U1+U2-K3:23	5	+U2-X16:5			11	1	1
+U1+U2-K3:24	6	+U2-X16:6			11	1	2
+U1+U2-K4:24	7	+U2-X16:7			11	1	3
+U1-T1:18	8	+U2-X16:8			5	2	3
+U2-X16:9	9				5	2	5

Created with IGE+XAO SEE Electrical School Version

List of Terminals: -X9a

Connection 1	Terminal	Connection 2	Type	Comment	Sheet	Cell
+U1-X8:2	1	+U1-T1:X15/6			6 1	11

Created with IGE+XAO SEE Electrical School Version

List of Terminals: -X9b

Connection 1	Terminal	Connection 2	Type	Comment	Sheet	Cell
+U1-X8:4	1				6 1	12

Created with IGE+XAO SEE Electrical School Version

List of Terminals: -X9c

Connection 1	Terminal	Connection 2	Type	Comment	Sheet	Cell
+U1-X8:1	1	+U1-T1:31			6 1	11

Created with IGE+XAO SEE Electrical School Version

List of Terminals: -X9d

Connection 1	Terminal	Connection 2	Type	Comment	Sheet	Cell
+U1-X18:3	1	+U1-T1:4			6 1	12

Created with IGE+XAO SEE Electrical School Version

List of Terminals: -X10a

Connection 1	Terminal	Connection 2	Type	Comment	Sheet	Cell
+U1-B3	1	+U1-K1.5.1:3			7 2	5
+U1-B4	2	+U1-K1.5.1:4			7 2	6
+U1-V1	3	+U1-K1.5.1:5			7 2	7
+U1-V2	4	+U1-K1.5.1:6			7 2	8
+U1-V3	5	+U1-K1.5.1:7			7 2	9
+U1-V4	6	+U1-K1.5.1:8			7 2	10

Created with IGE+XAO SEE Electrical School Version

List of Terminals: -X10b

Connection 1	Terminal	Connection 2	Type	Comment	Sheet	Cell
+U1-X5b:11	1	+U1-B3			7 2	5
+U1-X10b:3	2	+U1-B4			7 2	6
+U1-X10b:2	3	+U1-B5:1			7 2	7
+U1-X10b:3	4	+U1-B6:1			7 2	8
+U1-X10b:4	5	+U1-B7:1			7 2	9
+U1-X10b:5	6	+U1-B8:1			7 2	10

Created with IGE+XAO SEE Electrical School Version

List of Terminals: -X11

Connection 1	Terminal	Connection 2	Type	Comment	Sheet	Cell
+U1-X3:1	1	+U2-F20:1			9 2	2
+U1-X3:2	2	+U2-F20:3			9 2	2
+U1-X3:3	3	+U2-F20:5			9 2	2
+U1-X3:4	4	+U2-Q8:3			9 2	2
+U2-F17:1	5	+U1-X3:5			9 1	1
+U2-F14:1	6	+U1-X3:6			9 1	1
+U2-F17:5	7	+U1-X3:7			9 1	1
+U1-F14:3	8	+U1-X3:8			9 1	1

Created with IGE+XAO SEE Electrical School Version

List of Terminals: -X12

Connection 1	Terminal	Connection 2	Type	Comment	Sheet	Cell
+U2-S6:L	1	+U2-E2			9 1	3
+U2-S6:N	2	+U2-E2			9 1	3

Created with IGE+XAO SEE Electrical School Version

List of Terminals: -X13

Connection 1	Terminal	Connection 2	Type	Comment	Sheet	Cell
+U2-F19:2	1	+U2-T6:13			9 1	10
	2				9 1	10

Created with IGE+XAO SEE Electrical School Version

List of Terminals: -X14

Connection 1	Terminal	Connection 2	Type	Comment	Sheet	Cell
+U2-Q9:2	1	+U2-M4:U1			9 2	4
+U2-Q9:6	2	+U2-M4:W1			9 2	4

Created with IGE+XAO SEE Electrical School Version

List of Terminals: -X15a

Connection 1	Terminal	Connection 2	Type	Comment	Sheet	Cell
+U2;24VVS	1	-K10.3:2			10 2	7
+U2;24VVS	1	+U2-X16:2			10 2	1

Created with IGE+XAO SEE Electrical School Version

List of Terminals: -X15b

Connection 1	Terminal	Connection 2	Type	Comment	Sheet		Cell
+U2;24V	1	+U2-K10.0:1			10	2	4
+U2;24V	1	+U2-X16:1			10	2	1
+U2;24V	2	+U2-K10.0:2			10	2	5
+U2;24V	3	+U2-T4:31			11	1	9
+U2;24V	4	+U2-X17b:1			12	1	3

Created with IGE+XAO SEE Electrical School Version

List of Terminals: -X15c

Connection 1	Terminal	Connection 2	Type	Comment	Sheet	Cell
+U2-K6:A2	1	+U2;0VVS			13 1	
+U2;0VVS	1	+U2-X16:4			10 2	2
+U2-X19b:2	2	+U2;0VVS			13 1	

Created with IGE+XAO SEE Electrical School Version

List of Terminals: -X15d

Connection 1	Terminal	Connection 2	Type	Comment	Sheet		Cell
+U2-K10.0:5	1	+U2;0V			10	2	4
+U2;0V	1	+U2-X16:3			10	2	2
+U2-K10.0:3	2	+U2;0V			10	2	5
-K10.3:3	3	+U2;0V			10	2	7
+U2-T4:34	4	+U2;0V			11	1	9
+U2-X17c:1	5	+U2;0V			12	1	12

Created with IGE+XAO SEE Electrical School Version

List of Terminals: -X16

Connection 1	Terminal	Connection 2	Type	Comment	Sheet		Cell
+U2-X15b:1	1	+U1-X7:1			10	2	1
+U2-X15a:1	2	+U1-X7:2			10	2	1
+U2-X15d:1	3	+U1-X7:3			10	2	2
+U2-X15c:1	4	+U1-X7:4			10	2	2
+U1-X7:5	5	+U2-K6			11	1	1
+U1-X7:6	6				11	1	2
+U1-X7:7	7	+U2-T4:17			11	1	3
+U1-X7:8	8	+U2-Q6:12			5	2	3
	9	+U1-X7:9			5	2	4

Created with IGE+XAO SEE Electrical School Version

List of Terminals: -X17a

Connection 1	Terminal	Connection 2	Type	Comment	Sheet	Cell
+U2-S7	1	+U2-K10.1: I1			12 1	3
+U2-V2	2	+U2-K10.1: I2			12 1	4
+U2-V3	3	+U2-K10.1: I3			12 1	5
+U2-V4	4	+U2-K10.1: I4			12 1	6
+U2-B12:2	5	+U2-K10.1: I5			12 1	7
+U2-B13:BK	6	+U2-K10.1: I6			12 1	8

Created with IGE+XAO SEE Electrical School Version

List of Terminals: -X17b

Connection 1	Terminal	Connection 2	Type	Comment	Sheet	Cell
+U2-X15b:4	1	+U2-S7			12 1	3
+U2-X17b:1	2	+U2-B9:1			12 1	4
+U2-X17b:2	3	+U2-B10:1			12 1	5
+U2-X17b:3	4	+U2-B11:1			12 1	6
+U2-X17b:4	5	+U2-B12:1			12 1	7
+U2-X17b:5	6	+U2-B13:BN			12 1	8

Created with IGE+XAO SEE Electrical School Version

List of Terminals: -X17c

Connection 1	Terminal	Connection 2	Type	Comment	Sheet	Cell
+U2-X17c:6	1	+U2-X15d:5			12 1	12
+U2-V6:BU	6	+U2-X17c:1			12 1	9

Created with IGE+XAO SEE Electrical School Version

List of Terminals: -X19a

Connection 1	Terminal	Connection 2	Type	Comment	Sheet	Cell
+U2-K10.4:O5	1	+U2-Q10.M1:1			13 1	
+U2-K10.4:O6	2	+U2-Q11.M1:1			13 1	
+U2-K10.4:O7	3	+U2-Q12.M1:1			13 1	
+U2-K10.4:O8	4	+U2-Q12.M2:1			13 1	

Created with IGE+XAO SEE Electrical School Version

List of Terminals: -X19b

Connection 1	Terminal	Connection 2	Type	Comment	Sheet	Cell
+U2-Q10.M1:2	1	+U2-X15c:2			13 1	
+U2-Q11.M1:2	2	+U2-X19b:3			13 1	
+U2-Q12.M1:2	3	+U2-X19b:4			13 1	
+U2-Q12.M2:2	4	+U2-X19b:3			13 1	

Created with IGE+XAO SEE Electrical School Version

Created with IGE+XAO SEE Electrical School Version

List of Cables

Function (=)	Location (+)	Cable Name (-)	Description	Type	Dimension
	+U1	-W1			
	+U1	-W2			
	+U1	-W3			
	+U1	-W4			
	+U1	-W5			
	+U1	-W6			
	+U1	-W7			
	+U1	-W9			
	+U1	-W10			
	+U1	-W11			
	+U1	-W12			
	+U1	-W13			
	+U1	-W14			
	+U1	-W15			
	+U1	-W16			
	+U1	-W17			
	+U1	-W18			
	+U1+U2	-W6			
	+U2	-W3			
	+U2	-W6			
	+U2	-W19			
	+U2	-W20			
	+U2	-W21			
	+U2	-W22			
	+U2	-W23			
	+U2	-W24			
	+U2	-W25			
	+U2	-W26			
	+U2	-W27			
	+U2	-W28			

Created with IGE+XAO SEE Electrical School Version

List of Cables

Function (=)	Location (+)	Cable Name (-)	Description	Type	Dimension
	+U2	-W29			
	+U2	-W30			
	+U2	-W31			
	+U2	-W32			
	+U2	-W33			

Created with IGE+XAO SEE Electrical School Version

List of Cable Cores

Function (=)	Location (+)	Cable Name (-)	Core	Size	Colour	Description	Connection 1	Connection 2	Sheet		Cell
	+U1	-W1					+U1-W1:BN	+U1-W1:BN	3	1	2
	+U1	-W1					+U1-W1:BN	+U1-S1:L	3	1	2
	+U1	-W1	BN				+U1-W1	+U1-W1	3	1	2
	+U1	-W1	BN				+U1-W1	+U1-S1:L	3	1	2
	+U1	-W1	BU				+U1-X1:2	+U1-S1:N	3	1	2
	+U1	-W2	BN				+U1-S1:L	+U1-W2:1	3	1	2
	+U1	-W2	BN				+U1-W2:1	+U1-E1	3	1	2
	+U1	-W2	BN				+U1-S1:L	+U1-E1	3	1	2
	+U1	-W2	BN				+U1-W2:1	+U1-W2:1	3	1	2
	+U1	-W2	BU				+U1-S1:N	+U1-E1	3	1	2
	+U1	-W2	1				+U1-W2:BN	+U1-E1	3	1	2
	+U1	-W2	1				+U1-S1:L	+U1-W2:BN	3	1	2
	+U1	-W2	1				+U1-W2:BN	+U1-W2:BN	3	1	2
	+U1	-W2	1				+U1-S1:L	+U1-E1	3	1	2
	+U1	-W3	PE		4		+U1-X3:PE		3	1	10
	+U1	-W3	1				+U1-X3:1	+U2-X11:1	3	1	10
	+U1	-W3	1				+U1-X3:1	+U2-W3:1	3	1	10
	+U1	-W3	2				+U1-X3:2	+U2-X11:2	3	1	10
	+U1	-W3	2				+U1-X3:2	+U2-W3:2	3	1	10
	+U1	-W3	3				+U1-X3:3	+U2-X11:3	3	1	10
	+U1	-W3	3				+U1-X3:3	+U2-W3:3	3	1	10
	+U1	-W3	4				+U1-X3:4	+U2-W3:4	3	1	10
	+U1	-W3	4				+U1-X3:4	+U2-X11:4	3	1	10
	+U1	-W3	5				+U1-X3:5	+U2-X11:5	3	1	12
	+U1	-W3	5				+U1-X3:5	+U2-W3:5	3	1	12
	+U1	-W3	6				+U1-X3:6	+U2-X11:6	3	1	12
	+U1	-W3	6				+U1-X3:6	+U2-W3:6	3	1	12
	+U1	-W3	7				+U1-X3:7	+U2-W3:7	3	1	12
	+U1	-W3	7				+U1-X3:7	+U2-X11:7	3	1	12
	+U1	-W3	8				+U1-X3:8	+U2-W3:8	3	1	12

Created with IGE+XAO SEE Electrical School Version

List of Cable Cores

Function (=)	Location (+)	Cable Name (-)	Core	Size	Colour	Description	Connection 1	Connection 2	Sheet		Cell
	+U1	-W3	8				+U1-X3:8	+U2-X11:8	3	1	12
	+U1	-W4	1		BN		+U1-X4:1	+U1-M1:U1	4	1	2
	+U1	-W4	2		BK		+U1-X4:2	+U1-M1:V1	4	1	2
	+U1	-W4	3		GY		+U1-X4:3	+U1-M1:W1	4	1	2
	+U1	-W5	1		BN		+U1-T1:U	+U1-M2:U1	4	1	5
	+U1	-W5	2		BK		+U1-T1:V	+U1-M2:V1	4	1	5
	+U1	-W5	3		GY		+U1-T1:W	+U1-M2:W1	4	1	7
	+U1	-W6	1				+U1-X7:1	+U2-W6:1	4	1	10
	+U1	-W6	1				+U1-X7:1	+U2-X16:1	4	1	10
	+U1	-W6	2				+U1-X7:2	+U2-W6:2	4	1	11
	+U1	-W6	2				+U1-X7:2	+U2-X16:2	4	1	11
	+U1	-W6	3				+U1-X7:3	+U2-X16:3	4	1	11
	+U1	-W6	3				+U1-X7:3	+U2-W6:3	4	1	11
	+U1	-W6	4				+U1-X7:4	+U2-X16:4	4	1	12
	+U1	-W6	4				+U1-X7:4	+U2-W6:4	4	1	12
	+U1	-W7	8				+U1-W7:8		4	2	10
	+U1	-W7	8				+U1-W7:8		4	3	9
	+U1	-W8	8						4	2	10
	+U1	-W9	1				+U1-X6a:1	+U1-S5	7	2	4
	+U1	-W9	2				+U1-S5	+U1-X6b:1	7	2	4
	+U1	-W9	3				+U1-X6a:2	+U1-S2	5	1	4
	+U1	-W9	4				+U1-S2	+U1-X6b:2	5	1	4
	+U1	-W9	5				+U1-X6a:3	+U1-S3	5	1	7
	+U1	-W9	6				+U1-X6b:3	+U1-S3	5	1	7
	+U1	-W9	7				+U1-S3	+U1-X6a:4	5	1	7
	+U1	-W9	8				+U1-S3	+U1-X6b:4	5	1	7
	+U1	-W10	1				+U1-X6a:5	+U1-S4	5	1	7
	+U1	-W10	2				+U1-X6b:5	+U1-S4	5	1	7
	+U1	-W10	3				+U1-S4	+U1-X6a:6	5	1	7
	+U1	-W10	4				+U1-S4	+U1-X6b:6	5	1	7

Created with IGE+XAO SEE Electrical School Version

List of Cable Cores

Function (=)	Location (+)	Cable Name (-)	Core	Size	Colour	Description	Connection 1	Connection 2	Sheet		Cell
	+U1	-W11	1		BN		+U1-X8:1	+U1-X9c:1	6	1	3
	+U1	-W11	2		WH		+U1-X8:2	+U1-X9a:1	6	1	4
	+U1	-W11	3		BU		+U1-X18:3	+U1-X9d:1	6	1	4
	+U1	-W11	4		BK		+U1-X8:4	+U1-X9b:1	6	1	5
	+U1	-W12	1				-T3:1	+U1-K1.3:1	7	1	6
	+U1	-W12	2				-T3:2	+U1-K1.3:2	7	1	7
	+U1	-W13	1				+U1-X10b:1	+U1-B3	7	2	5
	+U1	-W13	2				+U1-B3	+U1-X10a:1	7	2	5
	+U1	-W14	1				+U1-X10b:2	+U1-B4	7	2	6
	+U1	-W14	2				+U1-B4	+U1-X10a:2	7	2	6
	+U1	-W15	1		BN		+U1-X10b:3	+U1-B5:1	7	2	7
	+U1	-W15	2		BK		+U1-V1	+U1-X10a:3	7	2	7
	+U1	-W16	1		BN		+U1-X10b:4	+U1-B6:1	7	2	8
	+U1	-W16	2		BK		+U1-V2	+U1-X10a:4	7	2	8
	+U1	-W17	1		BN		+U1-X10b:5	+U1-B7:1	7	2	9
	+U1	-W17	2		BK		+U1-V3	+U1-X10a:5	7	2	9
	+U1	-W18	1		BN		+U1-X10b:6	+U1-B8:1	7	2	10
	+U1	-W18	2		BK		+U1-V4	+U1-X10a:6	7	2	10
	+U1+U2	-W6	5				+U1-X7:5	+U2-X16:5	11	1	5
	+U1+U2	-W6	6				+U1-X7:6	+U2-X16:6	11	1	6
	+U1+U2	-W6	7				+U1-X7:7	+U2-X16:7	11	1	7
	+U1+U2	-W6	8				+U2-X16:8	+U1-X7:8	5	2	5
	+U1+U2	-W6	8				+U2-X16:9		11	1	5
	+U1+U2	-W6	9				+U2-Q9:11		11	1	6
	+U1+U2	-W6	9				+U1-X7:9	+U2-X16:9	5	2	6
	+U2	-W3	1				+U2-X11:1	+U1-X3:1	9	2	1
	+U2	-W3	1				+U2-X11:1	+U1-W3:1	9	2	1
	+U2	-W3	2				+U2-X11:2	+U1-X3:2	9	2	1
	+U2	-W3	2				+U2-X11:2	+U1-W3:2	9	2	1
	+U2	-W3	3				+U2-X11:3	+U1-W3:3	9	2	1

Created with IGE+XAO SEE Electrical School Version

List of Cable Cores

Function (=)	Location (+)	Cable Name (-)	Core	Size	Colour	Description	Connection 1	Connection 2	Sheet		Cell
	+U2	-W3	3				+U2-X11:3	+U1-X3:3	9	2	1
	+U2	-W3	4				+U2-X11:4	+U1-W3:4	9	2	1
	+U2	-W3	4				+U2-X11:4	+U1-X3:4	9	2	1
	+U2	-W3	5				+U2-X11:5	+U1-W3:5	9	1	1
	+U2	-W3	5				+U2-X11:5	+U1-X3:5	9	1	1
	+U2	-W3	6				+U2-X11:6	+U1-W3:6	9	1	1
	+U2	-W3	6				+U2-X11:6	+U1-X3:6	9	1	1
	+U2	-W3	7				+U2-X11:7	+U1-W3:7	9	1	1
	+U2	-W3	7				+U2-X11:7	+U1-X3:7	9	1	1
	+U2	-W3	8				+U2-X11:8	+U1-W3:8	9	1	1
	+U2	-W3	8				+U2-X11:8	+U1-X3:8	9	1	1
	+U2	-W6	1				+U2-X16:1	+U1-X7:1	10	2	1
	+U2	-W6	1				+U2-X16:1	+U1-W6:1	10	2	1
	+U2	-W6	2				+U2-X16:2	+U1-X7:2	10	2	1
	+U2	-W6	2				+U2-X16:2	+U1-W6:2	10	2	1
	+U2	-W6	3				+U2-X16:3	+U1-X7:3	10	2	2
	+U2	-W6	3				+U2-X16:3	+U1-W6:3	10	2	2
	+U2	-W6	4				+U2-X16:4	+U1-X7:4	10	2	2
	+U2	-W6	4				+U2-X16:4	+U1-W6:4	10	2	2
	+U2	-W8	8	0.00					10	1	4
	+U2	-W19	BN				+U2-S6:L	+U2-X12:1	9	1	3
	+U2	-W19	BU				+U2-S6:N	+U2-X12:2	9	1	3
	+U2	-W20	1		BN		+U2-T4:U	+U2-M3:U1	9	1	7
	+U2	-W20	2		BK		+U2-T4:V	+U2-M3:V1	9	1	7
	+U2	-W20	3		GY		+U2-T4:W	+U2-M3:W1	9	1	7
	+U2	-W21	4		BN		+U2-Q7:2	+U2-E3:U	9	2	2
	+U2	-W21	5		BK		+U2-Q7:4	+U2-E3:V	9	2	2
	+U2	-W21	6		GY		+U2-Q7:6	+U2-E3:W	9	2	2
	+U2	-W22	1		BN		+U2-X14:1	+U2-M4:U1	9	2	4
	+U2	-W22	4		BU		+U2-X14:2	+U2-M4:W1	9	2	4

Created with IGE+XAO SEE Electrical School Version

List of Cable Cores

Function (=)	Location (+)	Cable Name (-)	Core	Size	Colour	Description	Connection 1	Connection 2	Sheet		Cell
	+U2	-W23	1		BN		+U2-X17b:1	+U2-S7	12	1	5
	+U2	-W23	3		BK		+U2-S7	+U2-X17a:1	12	1	5
	+U2	-W24	1		BN		+U2-X17b:2	+U2-B9:1	12	1	6
	+U2	-W24	3		BK			+U2-X17a:2	12	1	6
	+U2	-W24	3		BK			+U2-V2	12	1	6
	+U2	-W25	1		BN		+U2-X17b:3	+U2-B10:1	12	1	7
	+U2	-W25	2		BK			+U2-X17a:3	12	1	7
	+U2	-W25	2		BK			+U2-V3	12	1	7
	+U2	-W26	2		BN		+U2-X17b:4	+U2-B11:1	12	1	8
	+U2	-W26	3		BK			+U2-V4	12	1	8
	+U2	-W26	3		BK			+U2-X17a:4	12	1	8
	+U2	-W27	2		BN		+U2-X17b:5	+U2-B12:1	12	1	9
	+U2	-W27	3		BK		+U2-V7:+	+U2-X17a:5	12	1	9
	+U2	-W27	3		BK		+U2-B12:2	+U2-V7	12	1	9
	+U2	-W27	3		BK		+U2-B12:2	+U2-X17a:5	12	1	9
	+U2	-W27	3		BK		+U2-V7:+	+U2-V7	12	1	9
	+U2	-W28	2		BN		+U2-X17b:6	+U2-B13:BN	12	1	10
	+U2	-W28	3		BK		+U2-R2:1	+U2-X17a:6	12	1	10
	+U2	-W28	3		BK		+U2-B13:BK	+U2-X17a:6	12	1	10
	+U2	-W28	4		BU		+U2-X17c:6	+U2-X17c:6	12	1	11
	+U2	-W28	4		BU		+U2-V6:BU	+U2-X17c:6	12	1	11
	+U2	-W29	1		BN		+U2-X19a:1	+U2-Q10.M1:1	13	1	
	+U2	-W29	2		BU		+U2-Q10.M1:2	+U2-X19b:1	13	1	
	+U2	-W30	1		BN		+U2-X19a:2	+U2-Q11.M1:1	13	1	
	+U2	-W30	2		BU		+U2-Q11.M1:2	+U2-X19b:2	13	1	
	+U2	-W31	1		BN		+U2-X19a:3	+U2-Q12.M1:1	13	1	
	+U2	-W31	2		BU		+U2-Q12.M1:2	+U2-X19b:3	13	1	
	+U2	-W32	1		BN		+U2-X19a:4	+U2-Q12.M2:1	13	1	
	+U2	-W32	2		BU		+U2-Q12.M2:2	+U2-X19b:4	13	1	
	+U2	-W33	6	0.00	BN		+U2-X23:Brown	+U2-K10.2:+	12	2	4

Created with IGE+XAO SEE Electrical School Version

List of Cable Cores

Function (=)	Location (+)	Cable Name (-)	Core	Size	Colour	Description	Connection 1	Connection 2	Sheet	Cell
	+U2	-W33	7	0.00	WH		+U2-X23:White	+U2-K10.2:B	12 2	5
	+U2	-W33	8	0.00	BU		+U2-X23:Blue	+U2-K10.2:-	12 2	6
	+U2	-W33	9	0.00	BK		+U2-X23:Black	+U2-K10.2:A	12 2	7
	+U2	-W33	10	0.00	GREY			+U2-K10.2:C	12 2	8

Created with IGE+XAO SEE Electrical School Version

Terminal Matrix

Terminal Strip: -X0

| | | |

Terminal Matrix

Terminal Strip: -X1

Cell	3	3
Sheet	1 3	1 3

Note	Cable type	Cable name	----- Cable -----

Connection 1	Term.	No.	Connection 2
-E1	0	1	-StL
-E1	0	2	-StN
	0		
	0		
	0	

Terminal Matrix

Terminal Strip: -X2

Cell	9	9	9	9
Sheet	1 3	1 3	1 3	1 3

Note	Cable type	Cable name	----- Cable -----

Connection 1	Term.	No.	Connection 2
+U2-X12:1	0	1	-F4:2
+U2-X12:2	0	2	-F4:4
+U2-X12:3	0	3	-F4:6
+U2-X12:4	0	4	-F4:8

Note	Cable type	Cable name	----- Cable -----
		+U1-W1	Brow Black Grey Blue

Created with IGE+XAO SEE Electrical School Version

- Logo -		-X2	Project: IB3_SEE_NED08_v19	Drawing no.:	Rev.:	Init.:
			Date: 27/11/2020	Function:	Location: +U1	Page: 3

Terminal Matrix

Terminal Strip: -X3

Cell	Sheet	Connection 1	Term.	No.	Connection 2
3	1 4	-M2:U1	O	1	-Q3:2
			O		-Q4:6
			O		-Q5:1
3	1 4	-M2:V1	O	2	-Q3:4
			O		-Q4:4
			O		-Q5:3
4	1 4	-M2:W1	O	3	-Q3:6
			O		-Q4:2
			O		-Q5:5
5	1 4	-M2:W2	O	4	-Q5:2
			O		-Q6:2
5	1 4	-M2:V2	O	5	-Q5:4
			O		-Q6:4
5	1 4	-M2:U2	O	6	-Q5:6
			O		-Q6:6

Note	Cable type	Cable name	----- Cable -----

Note	Cable type	Cable name	----- Cable -----

Created with IGE+XAO SEE Electrical School Version

- Logo -		-X3	Project: IB3_SEE_NED08_v19	Drawing no.:	Rev.:	Init.:
			Date: 27/11/2020	Function:	Location: +U1	Page: 4

Terminal Matrix

Terminal Strip: -X4

Cell	7	8
Sheet	14	14

Note	Cable type	Cable name	----- Cable -----

Connection 1	Term.	No.	Connection 2
-M3:U1	0	1	-Q9:2
-M3:W1	0	2	-Q9:6
	0		
	0		
	0	

Terminal Matrix

Terminal Strip: -X5a

Cell	10	3	12	1
Sheet	1 4	3 7	1 8	2 8

Note	Cable type	Cable name	----- Cable -----

Connection 1	Term.	No.	Connection 2
-X7:2	○	1	-K3:24
-K1.5:2	○	2	-X7:2
-K1.4:41	⊗	3	24VSV
-K1.6:1	⊗	4	24VSV
	○		
	○		
	○	

Terminal Matrix

Terminal Strip: -X5b

Cell	10	7	2	8	9	9	2	8	2
Sheet	4 1	4 3	5 1	5 1	5 1	5 1	7 1	7 1	7 3

Note	Cable type	Cable name	----- Cable -----

Connection 1	Term.	No.	Connection 2
-X7:1		1	-K3:23
-P10:+		2	24V
-K5:B1		3	24V
-K5:13		4	24V
-K5:23		5	24V
-K5:33		6	24V
-K13:41		7	24V
-X9c:1		8	24V
-K1:5l		9	24V

Note	Cable type	Cable name	----- Cable -----

- Logo -		-X5b	Project: IB3_SEE_NED08_v19	Drawing no.:	Rev.:	Init.:
			Date: 27/11/2020	Function:	Location: +U1	Page: 7

Created with IGE+XAO SEE Electrical School Version

Terminal Matrix

Terminal Strip: -X5c

Cell	10	3
Sheet	1 4	2 8

Note	Cable type	Cable name	----- Cable -----

Connection 1	Term.	No.	Connection 2
-X7:4	0	1	-K4:24
0VVS	0	2	-Q3:A2
	0		-Q4:A2
	0		
	0		
	0	

Terminal Matrix

Terminal Strip: -X5d

Cell	Sheet
10	4 1
7	4 3
2	5 1
8	5 1
9	5 1
12	6 1
12	7 1
11	7 3
10	8 1
11	8 2
10	7 1

Note	Cable type	Cable name	----- Cable -----

Connection 1	Term.	No.	Connection 2
-X7:3	○	1	-K4:23
-P10:-	⊗	2	0V
0V	⊗	3	-K5:B2
0V	⊗	4	-X6b:1
0V	⊗	5	-K3:A2
	○		-K4:A2
0V	⊗	6	-K5:13
0V	⊗	7	-K1:3:44
-K1:5:10	⊗	8	0V
0V	⊗	9	-K1:4:44
0V	⊗	10	-K1:6:10
-K1:3:44	○	11	
-K1:3:8	○		-X9d:1
	○		
	○		
	○	

Terminal Matrix

Terminal Strip: -X6a

Cell	8	5	7	7	7	7	7	7
Sheet	51	51	51	51	51	51	51	51

Note	Cable type	Cable name	----- Cable -----

Connection 1	Term.	No.	Connection 2
-P1:1	○	1	-K5:14
-S2	○	2	
-S5	○	3	-K5:S31
	⊗	4	-S5
-S6	⊗	5	
	⊗	6	-S6
-S7	⊗	7	
-K5:S32	○	8	-S7

Note	Cable type	Cable name	----- Cable -----

Created with IGE+XAO SEE Electrical School Version

- Logo -		-X6a	Project: IB3_SEE_NED08_v19	Drawing no.:	Rev.:	Init.:
			Date: 27/11/2020	Function:	Location: +U1	Page: 10

Terminal Matrix

Terminal Strip: -X6b

Cell	8	5	7	7	7	7	7	7
Sheet	1 5	1 5	1 5	1 5	1 5	1 5	1 5	1 5

Note	Cable type	Cable name	----- Cable -----

Connection 1	Term.	No.	Connection 2
-X5d:4	○	1	-P1:2
-K3:41	○	2	-S2
-S5	○	3	-K5:S21
	⊗	4	-S5
-S6	⊗	5	
	⊗	6	-S6
-S7	⊗	7	
-K5:S22	○	8	-S7

Note	Cable type	Cable name	----- Cable -----

Created with IGE+XAO SEE Electrical School Version

- Logo -		-X6b	Project: IB3_SEE_NED08_v19	Drawing no.:	Rev.:	Init.:
			Date: 27/11/2020	Function:	Location: +U1	Page: 11

Terminal Matrix

Terminal Strip: -X7

Cell	Sheet	Note	Cable type	Cable name	----- Cable -----	Term.	No.	Connection 1	Connection 2
11	1 4					O	1	+U2-X14:1	-X5b:1
11	1 4					O	2	+U2-X14:2	-X5a:1
						O			-X5a:2
12	1 4					O	3	+U2-X14:3	-X5d:1
12	1 4					O	4	+U2-X14:4	-X5c:1
1	1 11					O	5	+U2-X14:5	-K3:34
2	1 11					O	6	+U2-X14:6	-K4:34
4	1 11					O	7	+U2-X14:7	-K4:33
7	1 11			+U1+U2-W2	8	O	8		+U2-X14:8
5	1 5					O	8		-K4:42
8	1 11				9	O	9		+U2-X14:9
5	1 5					O	9	-K5:S34	

Note	Cable type	Cable name	----- Cable -----
		+U1+U2-W2	1 2 3 4 6

- Logo -		-X7	Project: IB3_SEE_NED08_v19
			Date: 27/11/2020
			Drawing no.:
			Function:
			Rev.:
			Location: +U1
			Init.:
			Page: 12

Created with IGE+XAO SEE Electrical School Version

Terminal Matrix

Terminal Strip: -X8

| | | |

Terminal Matrix

Terminal Strip: -X9

Cell	6	7	6	7	7	7
Sheet	1 7	1 7	1 7	1 7	1 7	1 7

Note	Cable type	Cable name	----- Cable -----

Connection 1	Term.	No.	Connection 2
-X8:1	○	1	
-X8:2	○	2	
	○	3	-B1
	○	4	-B1
	○	5	-B1
	○	6	-B1
	○		
	○		
	○	

Terminal Matrix

Terminal Strip: -X9a

Cell	9
Sheet	7 1

Note	Cable type	Cable name	----- Cable -----

Connection 2	No.	Term.	Connection 1
-X1:2	1	1	-K1:3:6
		2	
		3	
		4	
		5	
		6	
		7	
		8	
		9	
		10	
		11	
		12	
		13	
		14	
		15	
		16	
		17	
		18	
		19	
		20	
		21	
		22	
		23	
		24	
		25	
		26	
		27	
		28	
		29	
		30	
		31	
		32	
		33	
		34	
		35	
		36	
		37	
		38	
		39	
		40	
		41	
		42	
		43	
		44	
		45	
		46	
		47	
		48	
		49	
		50	
		51	
		52	
		53	
		54	
		55	
		56	
		57	
		58	
		59	
		60	
		61	
		62	
		63	
		64	
		65	
		66	
		67	
		68	
		69	
		70	
		71	
		72	
		73	
		74	
		75	
		76	
		77	
		78	
		79	
		80	
		81	
		82	
		83	
		84	
		85	
		86	
		87	
		88	
		89	
		90	
		91	
		92	
		93	
		94	
		95	
		96	
		97	
		98	
		99	
		100	
		101	
		102	
		103	
		104	
		105	
		106	
		107	
		108	
		109	
		110	
		111	
		112	
		113	
		114	
		115	
		116	
		117	
		118	
		119	
		120	
		121	
		122	
		123	
		124	
		125	
		126	
		127	
		128	
		129	
		130	
		131	
		132	
		133	
		134	
		135	
		136	
		137	
		138	
		139	
		140	
		141	
		142	
		143	
		144	
		145	
		146	
		147	
		148	
		149	
		150	
		151	
		152	
		153	
		154	
		155	
		156	
		157	
		158	
		159	
		160	
		161	
		162	
		163	
		164	
		165	
		166	
		167	
		168	
		169	
		170	
		171	
		172	
		173	
		174	
		175	
		176	
		177	
		178	
		179	
		180	
		181	
		182	
		183	
		184	
		185	
		186	
		187	
		188	
		189	
		190	
		191	
		192	
		193	
		194	
		195	
		196	
		197	
		198	
		199	
		200	
		201	
		202	
		203	
		204	
		205	
		206	
		207	
		208	
		209	
		210	
		211	
		212	
		213	
		214	
		215	
		216	
		217	
		218	
		219	
		220	
		221	
		222	
		223	
		224	
		225	
		226	
		227	
		228	
		229	
		230	
		231	
		232	
		233	
		234	
		235	
		236	
		237	
		238	
		239	
		240	
		241	
		242	
		243	
		244	
		245	
		246	
		247	
		248	
		249	
		250	
		251	
		252	
		253	
		254	
		255	
		256	
		257	
		258	
		259	
		260	
		261	
		262	
		263	
		264	
		265	
		266	
		267	
		268	
		269	
		270	
		271	
		272	
		273	
		274	
		275	
		276	
		277	
		278	
		279	
		280	
		281	
		282	
		283	
		284	
		285	
		286	
		287	
		288	
		289	
		290	
		291	
		292	
		293	
		294	
		295	
		296	
		297	
		298	
		299	
		300	
		301	
		302	
		303	
		304	
		305	
		306	
		307	
		308	
		309	
		310	
		311	
		312	
		313	
		314	
		315	
		316	
		317	
		318	
		319	
		320	
		321	
		322	
		323	
		324	
		325	
		326	
		327	
		328	
		329	
		330	
		331	
		332	
		333	
		334	
		335	
		336	
		337	
		338	
		339	
		340	
		341	
		342	
		343	
		344	
		345	
		346	
		347	
		348	
		349	
		350	
		351	
		352	
		353	
		354	
		355	
		356	
		357	
		358	
		359	
		360	
		361	
		362	
		363	
		364	
		365	
		366	
		367	
		368	
		369	
		370	
		371	
		372	
		373	
		374	
		375	
		376	
		377	
		378	
		379	
		380	
		381	
		382	
		383	
		384	
		385	
		386	
		387	
		388	
		389	
		390	
		391	
		392	
		393	
		394	
		395	
		396	
		397	
		398	
		399	
		400	
		401	
		402	
		403	
		404	
		405	
		406	
		407	
		408	
		409	
		410	
		411	
		412	
		413	
		414	
		415	
		416	
		417	
		418	
		419	
		420	
		421	
		422	
		423	
		424	
		425	
		426	
		427	
		428	
		429	
		430	
		431	
		432	
		433	
		434	
		435	
		436	
		437	
		438	
		439	
		440	
		441	
		442	
		443	
		444	
		445	
		446	
		447	
		448	
		449	
		450	
		451	
		452	
		453	
		454	
		455	
		456	
		457	
		458	
		459	
		460	
		461	
		462	
		463	
		464	
		465	
		466	
		467	
		468	
		469	
		470	
		471	
		472	
		473	
		474	
		475	
		476	
		477	
		478	
		479	
		480	
		481	
		482	
		483	
		484	
		485	
		486	
		487	
		488	
		489	
		490	
		491	
		492	
		493	
		494	
		495	
		496	
		497	
		498	
		499	
		500	
		501	
		502	
		503	
		504	
		505	
		506	
		507	
		508	
		509	
		510	
		511	
		512	
		513	
		514	
		515	
		516	
		517	
		518	
		519	
		520	
		521	
		522	
		523	
		524	
		525	
		526	
		527	
		528	
		529	
		530	
		531	
		532	
		533	
		534	
		535	
		536	
		537	
		538	
		539	
		540	
		541	
		542	
		543	
		544	
		545	
		546	
		547	
		548	
		549	
		550	
		551	
		552	
		553	
		554	
		555	
		556	
		557	
		558	
		559	
		560	
		561	
		562	
		563	
		564	
		565	
		566	
		567	
		568	
		569	
		570	
		571	
		572	
		573	
		574	
		575	
		576	
		577	
		578	
		579	
		580	
		581	
		582	
		583	
		584	
		585	
		586	
		587	
		588	
		589	
		590	
		591	
		592	
		593	
		594	
		595	
		596	
		597	
		598	
		599	
		600	
		601	
		602	
		603	
		604	
		605	
		606	
		607	
		608	
		609	
		610	
		611	
		612	
		613	
		614	
		615	
		616	
		617	
		618	
		619	
		620	
		621	
		622	
		623	
		624	
		625	
		626	
		627	
		628	
		629	
		630	
		631	
		632	
		633	
		634	
		635	
		636	
		637	
		638	
		639	
		640	
		641	
		642	
		643	
		644	
		645	
		646	
		647	
		648	
		649	
		650	
		651	
		652	
		653	
		654	
		655	
		656	
		657	
		658	
		659	
		660	
		661	
		662	
		663	
		664	
		665	
		666	
		667	
		668	
		669	
		670	
		671	
		672	
		673	
		674	
		675	
		676	
		677	
		678	
		679	
		680	
		681	
		682	
		683	
		684	
		685	
		686	
		687	
		688	
		689	
		690	
		691	
		692	
		693	
		694	
		695	
		696	
		697	
		698	
		699	
		700	
		701	
		702	
		703	
		704	
		705	
		706	
		707	
		708	
		709	
		710	
		711	
		712	
		713	
		714	
		715	
		716	
		717	
		718	
		719	
		720	
		721	
		722	
		723	
		724	
		725	
		726	
		727	
		728	
		729	
		730	
		731	
		732	
		733	
		734	
		735	
		736	
		737	
		738	
		739	
		740	
		741	
		742	
		743	
		744	
		745	
		746	
		747	
		748	
		749	
		750	
		751	
		752	
		753	
		754	
		755	
		756	
		757	
		758	
		759	
		760	
		761	
		762	
		763	
		764	
		765	
		766	
		767	
		768	
		769	
		770	
		771	
		772	
		773	
		774	
		775	
		776	
		777	
		778	
		779	
		780	
		781	
		782	
		783	
		784	
		785	
		786	
		787	
		788	
		789	
		790	
		791	
		792	
		793	
		794	
		795	
		796	
		797	
		798	
		799	
		800	
		801	
		802	
		803	
		804	
		805	
		806	
		807	
		808	
		809	
		810	
		811	
		812	
		813	
		814	
		815	
		816	
		817	
		818	
		819	
		820	
		821	
		822	
		823	
		824	
		825	
		826	
		827	
		828	
		829	
		830	
		831	
		832	
		833	
		834	
		835	
		836	
		837	
		838	
		839	
		840	
		841	
		842	
		843	
		844	
		845	
		846	
		847	
		848	
		849	
		850	
		851	
		852	
		853	
		854	
		855	
		856	
		857	
		858	
		859	
		860	
		861	
		862	
		863	
		864	
		865	
		866	
		867	
		868	
		869	
		870	
		871	
		872	
		873	
		874	
		875	
		876	
		877	
		878	
		879	
		880	
		881	
		882	
		883	
		884	
		885	
		886	
		887	
		888	
		889	
		890	
		891	
		892	
		893	
		894	
		895	
		896	
		897	
		898	
		899	
		900	
		901	
		902	
		903	
		904	
		905	
		906	
		907	
		908	
		909	
		910	
		911	
		912	
		913	
		914	
		915	
		916	
		917	
		918	
		919	
		920	
		921	
		922	
		923	
		924	
		925	
		926	
		927	
		928	
		929	
		930	
		931	
		932	
		933	
		934	
		935	
		936	
		937	
		938	
		939	
		940	
		941	
		942	
		943	
		944	
		945	
		946	
		947	
		948	
		949	
		950	
		951	
		952	
		953	
		954	
		955	
		956	
		957	
		958	
		959	
		960	
		961	
		962	
		963	
		964	
		965	
		966	
		967	
		968	
		969	
		970	
		971	
		972	
		973	
		974	
		975	
		976	
		977	
		978	
		979	
		980	
		981	
		982	
		983	
		984	
		985	
		986	
		987	
		988	
		989	
		990	
		991	
		992	
		993	
		994	
		995	
		996	
		997	
		998	
		999	
		1000	

Note	Cable type	Cable name	----- Cable -----

Created with IGE+XAO SEE Electrical School Version

- Logo -		-X9a	Project: IB3_SEE_NED08_v19	Drawing no.:	Rev.:	Init.:
			Date: 27/11/2020	Function:	Location: +U1	Page: 15

Terminal Matrix

Terminal Strip: -X9b

Cell	10
Sheet	7 1

Note	Cable type	Cable name	----- Cable -----

Connection 2	No.	Term.	Connection 1
-X11:4	1	0	
		0	
		0	

Terminal Matrix

Terminal Strip: -X9c

Cell	9
Sheet	7 1

Note	Cable type	Cable name	----- Cable -----

Connection 1	Term.	No.	Connection 2
-X5b:8	0	1	-X11:1
	0		
	0		
	0	

Terminal Matrix

Terminal Strip: -X9d

Note	Cable type	Cable name	----- Cable -----

Connection 1	Term.	No.	Connection 2
-X5d:11	0	1	-X13:3
	0		
	0		
	0	

Terminal Matrix

Terminal Strip: -X12

Cell	1	1	2	2
Sheet	9 1	9 1	9 1	9 1

Note	Cable type	Cable name	----- Cable -----

Connection 1	Term.	No.	Connection 2
+U1-X2:1	○	1	
+U1-X2:2	○	2	
+U1-X2:3	○	3	
+U1-X2:4	○	4	
	○		
	○		
	○

Terminal Matrix

Terminal Strip: -X14

Cell	Sheet	Note	Cable type	Cable name	----- Cable -----
1	10 1			+U1+U2-W2	6
2	10 1				
2	10 1				
3	10 1				
1	11 1				
2	11 1				
4	11 1				
7	11 1				
8	11 1				

Connection 1	Term.	No.	Connection 2
+U1-X7:1	O	1	-X15b:1
+U1-X7:2	O	2	-X15a:1
+U1-X7:3	O	3	-X15d:1
+U1-X7:4	O	4	-X15c:1
+U1+U2-T3:H2	O	5	+U1-X7:5
+U1+U2-T3:H1	O	6	+U1-X7:6
+U1+U2-T3:47	O	7	
+U1+U2-T3:HC	O		+U1-X7:7
+U1-X7:8	O	8	+U1+U2-T3:MC
+U1-X7:9	O	9	+U1+U2-T3:MB

Note	Cable type	Cable name	----- Cable -----
		+U1+U2-W2	1 2 3 4 8 9

Created with IGE+XAO SEE Electrical School Version

- Logo -		-X14	Project: IB3_SEE_NED08_v19	Drawing no.:	Rev.: / Init.:
			Date: 27/11/2020	Function:	Location: +U2 / Page: 20

Terminal Matrix

Terminal Strip:
-X15a

| Cell | 2 | | |

Terminal Matrix

Terminal Strip: -X15b

Cell	1	5
Sheet	10 1	12 1

Note	Cable type	Cable name	----- Cable -----

Connection 1	Term.	No.	Connection 2
-X14:1	1		24V
-X16b:1	2		24V

Note	Cable type	Cable name	----- Cable -----

Created with IGE+XAO SEE Electrical School Version

- Logo -		-X15b	Project: IB3_SEE_NED08_v19	Drawing no.:	Rev.:	Init.:
			Date: 27/11/2020	Function:	Location: +U2	Page: 22

Terminal Matrix

Terminal Strip: -X15c

| Cell | | |

Terminal Matrix

Terminal Strip: -X15d

Cell	2	10	12	12
Sheet	10 1	10 1	12 1	11 1

Note	Cable type	Cable name	----- Cable -----

Connection 1	Term.	No.	Connection 2
-X14:3		1	0V
0V		2	
0V		3	-X16c:1
0V		4	-K6:33

Note	Cable type	Cable name	----- Cable -----

Created with IGE+XAO SEE Electrical School Version

- Logo -		-X15d	Project: IB3_SEE_NED08_v19	Drawing no.:	Rev.:	Init.:
			Date: 27/11/2020	Function:	Location: +U2	Page: 24

Terminal Matrix

Terminal Strip:
-X16a

Cell	5	6	7	8	9	11
Sheet	1 12	1 12	1 12	1 12	1 12	1 12

Note	Cable type	Cable name	----- Cable -----

Connection 2	No.	Term.	Connection 1
-V1	1	O	
-V2	2	O	
-V3	3	O	
-V4	4	O	
-Rt:1	5	O	
-R2:1	6	O	
		O	
		O	

Terminal Matrix

Terminal Strip: -X16b

Cell	5	6	7	8	9	11
Sheet	12 1	12 1	12 1	12 1	12 1	12 1

Note	Cable type	Cable name	----- Cable -----

Connection 1	Term.	No.	Connection 2
-B10:BN		1	-X15b:2
-B11:BN		2	
-B12:BN		3	
-B13:BN		4	
-B14:BN		5	
-B15:BN		6	

Note	Cable type	Cable name	----- Cable -----

Created with IGE+XAO SEE Electrical School Version

- Logo -		-X16b	Project: IB3_SEE_NED08_v19	Drawing no.:	Rev.: / Init.:
			Date: 27/11/2020	Function:	Location: +U2 / Page: 26

Terminal Matrix

Terminal Strip: -X16c

Cell	12	10	11
Sheet	12 1	12 1	12 1

Note	Cable type	Cable name	----- Cable -----

Connection 1	Term.	No.	Connection 2
-X15d:3		1	
		5	-V5:BU
		6	-V6:BU

Terminal Matrix

Terminal Strip: -X17a

| Cell | | |

Terminal Matrix

Terminal Strip: -X17b

| Cell | | |