Project data

Date 3/3/2026

Basic data

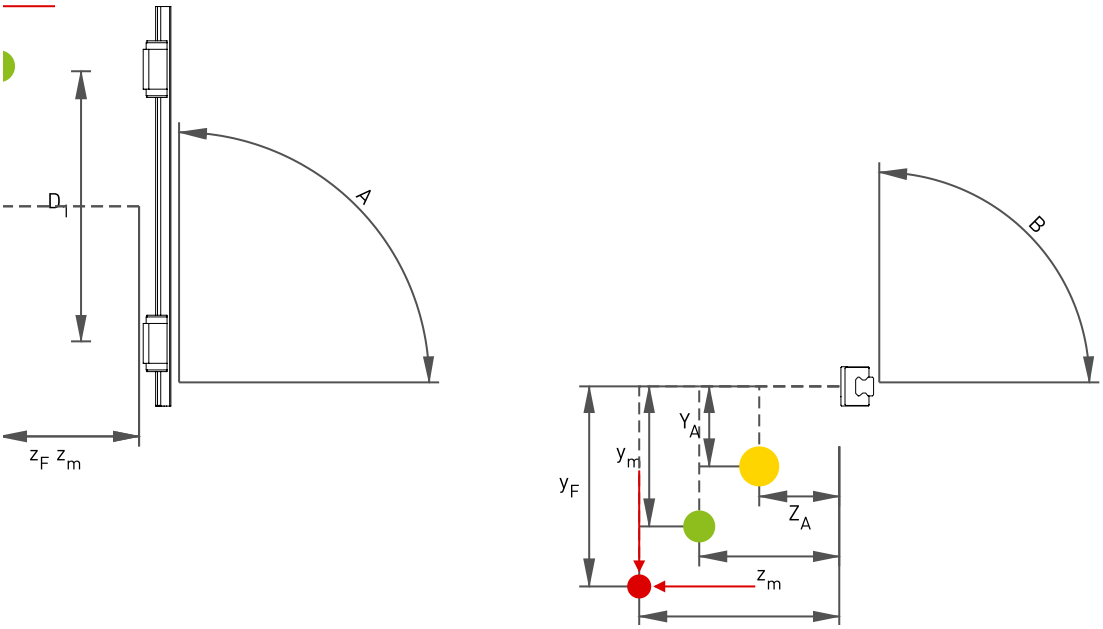

Stroke length [mm]	3,000
Block distance D_1 [mm]	350
Bearing of drive axis y_A [mm]	0
Bearing of drive axis z_A [mm]	0
Angle A [°]	90
Angle B [°]	90

Centre of gravity of the moved mass					
		Mass [kg]	x_m [mm]	y_m [mm]	z_m [mm]
1	Mass 1	76	90	0	920

Driving profile

	Travel distance [mm]	v [m/s]	a [m/s²]	t_{pos} [s]	t_a [s]	t_{Pause} [s]	Acting mass	Acting forces	Description of single travel run
Travel run 1	3,000	0.3	1	10.3	0.3		[m1]	-	
Travel run 2	-3,000	-0.3	-1	10.3	0.3		[m1]	-	

v = Speed · a = Acceleration · t_{pos} = Positioning time · t_a = Acceleration time · t_{Pause} = Pause · Acting mass = Moving masses on this journey · Acting forces = External forces at work on this journey

Total cycle time [s]	20.6

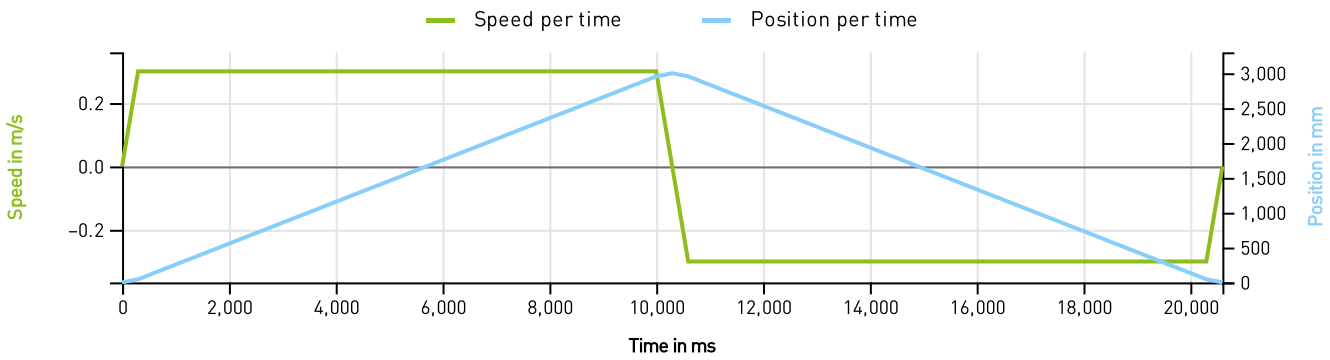

Operating data	
Number of cycles/hour	30
Number of hours/day	8
Number of days/year	220

Selected block **CGW30CC**

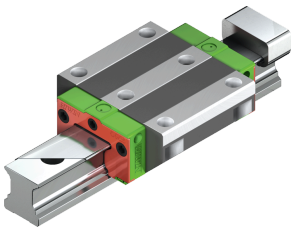

Series:	CG
Type:	W
Size:	30
Load type:	C
Block mounting:	C
Preload:	Z0

Data of block	
Dynamic load rating C_{dyn} [N]	48,500
Static load rating C_0 [N]	71,870
Total height H [mm]	42
Block width W [mm]	90
Block length L [mm]	97
Wälzkörperanordnung	O

Application data			
	Calculated value	**Permissible value**	**capacity utilisation**
Load ratio C_{dyn} /P (P/C_{dyn})	22.13 (0.05)	3 (0.33)	14%
Equivalent dynamic response load P [N]	2,191.38		
Short block distance	1		
Equivalent dynamic response load with factors P_{eff} [N]	2,848.79		
Load factor f_w	1.3		
Short stroke factor f_s	1		
Service life [km]	246,725		
Service life in years [a]	>10	15	2%
Static structural safety	30.81	3	10%
Maximum operating load F_{bmax} [N]	2,332.97		
Maximum speed [m/s]	0.3	5	6%
Max. acceleration [m/s²]	1	80	1%
Lubrication interval [km]	3,000		

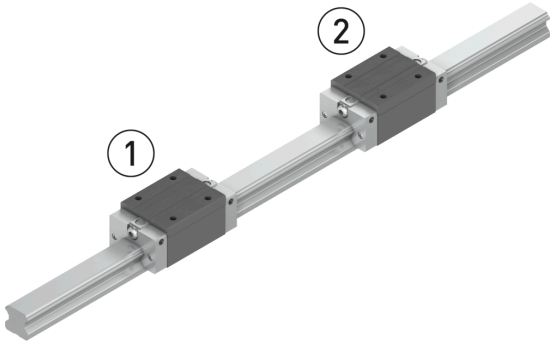

Loads per block (incl. load factor)				
	Equivalent dynamic load P [N]	Load ratio C_{dyn} /P (P/C_{dyn})	Max. stat. load [N]	Static structural safety S_0
Block 1	2,191	22.13 (0.05)	2,333	30.81
Block 2	2,191	22.13 (0.05)	2,333	30.81

Nominal service life				
	Eqv. dyn. load P [N]	Lastverhältnis mit Faktoren C_{dyn}/P_{eff} (P_{eff}/C_{dyn})	Path [km]	Time [a]
Block 1	2,849	17.02 (0.06)	246,725	>10
Block 2	2,849	17.02 (0.06)	246,725	>10

General notes

Calculation results are based on the technical information you entered; for missing information, values were assumed by us.

Please note that the calculated service life is a theoretical value.

The service life calculation is based on the assumption of an ideally rigid adjacent construction and presupposes that all the specifications in our assembly instructions for profile rail guides are complied with (in particular the specifications on lubrication).

Please note that the calculated service life is a theoretical value.

The screw strength consideration is not a component of the service life calculation (more information in the assembly instructions for profile rail guides).

In addition, the effects of vibrations, impacts, dirt or temperature fluctuations can only be introduced into the service life calculation by artificially increasing the equivalent load.