Profiled rail guideway PGCW30CC1/2R3000Z0H1/1ZZX0MAM1000L1CSS

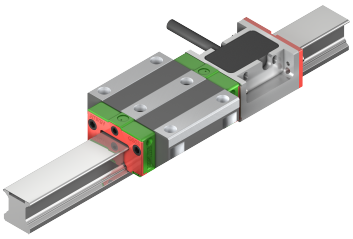

Dimensional drawing

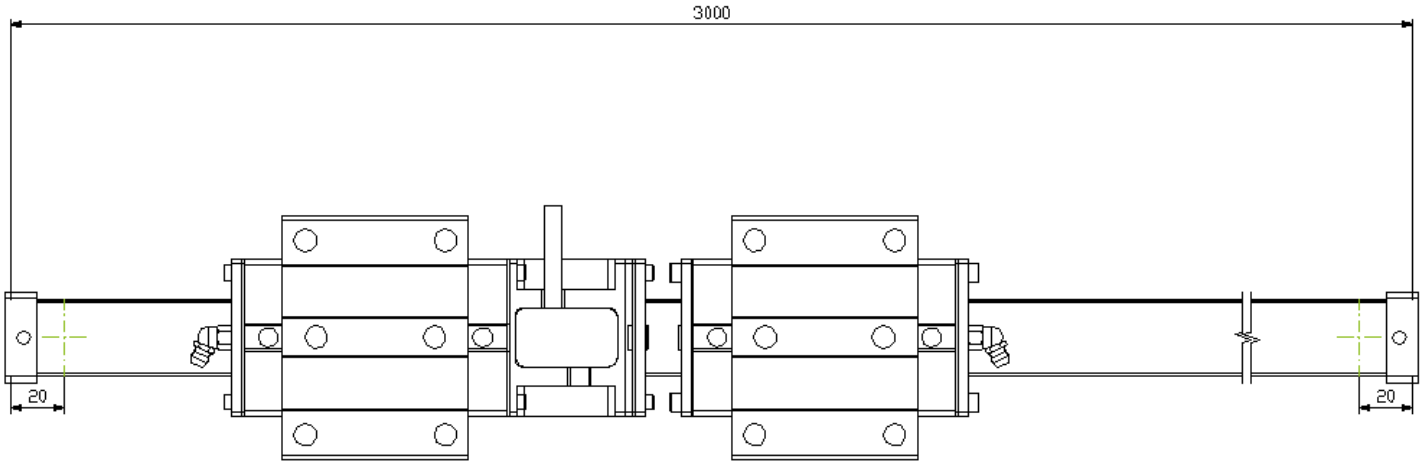

Configuration attributes: **PGCW30CC1/2R3000Z0H1/1ZZX0MAM1000L1CSS**		
Series	PG	
Based on	C	CG series
Block type	W	flange block
Size	30	
Load type	C	heavy load
Block mounting	C	from above or below
Number of blocks with sensors per axis	1	
Number of blocks per axis	2	
Rail mounting	R	from above
Rail length	3000	
Block preload	Z0	light preload
Precison code	H	
Rails per axis with measuring system	1	
Rails per axis	1	
Sealing system	ZZX	
Long-term lubrication	un-defined	

Measuring system model	M	MAGIC
Output signal	A	Analogue 1 Vss
Index	M	Multi-Index
Cable length [mm]	1000	
Cable assembly	L	Open end
Alignment	1	Alignment 1 (standard)
Cover strip	CS	Cover strip
Dimensions of strip cover strip [mm]	S	Dimensions of profile rail with steel clamp

Load rates and moments

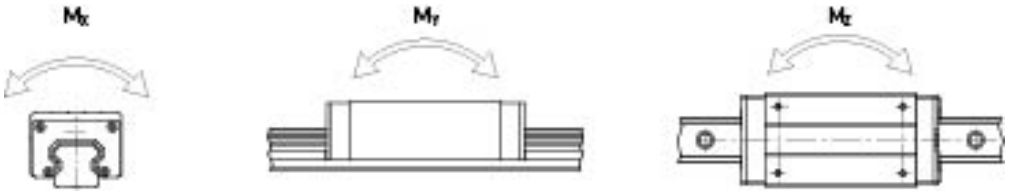

Series/ Size	Dynamic load rate C_{dyn} [N] [1]	Static load rate C_0 [N]	Dynamic moment [Nm]			Static moment [Nm]		
			M_X	M_Y	M_Z	M_{0X}	M_{0Y}	M_{0Z}
CG_30C	48500	71870	792	583	583	950	700	700

[1] Dynamic load rate for 50,000 m travel distance

Block measurements [mm]

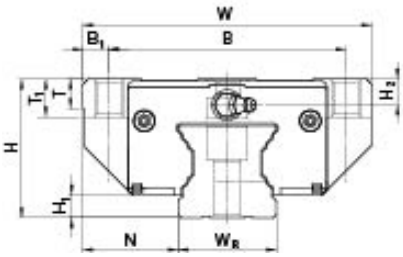

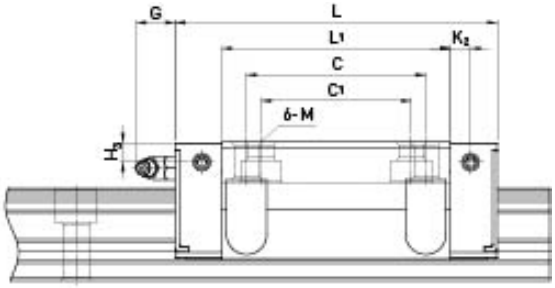

Series/ Size	Mounting dimensions [mm]			Load rates [N]		Weight [kg]
	H	H_1	N	C_{dyn}	C_0	m
CGW30CC	42	7	31	48500	71870	0.9

Series/ Size	Block measurements [mm]																		
	W	B	B_1	C	C_1	L_1	L	K_1	K_2	M	G	G_n	T	T_1	T_2	H_2	H_3	L_K	L_{K1}
CGW30CC	90	72	9	52	44	69	103.4	-	8.7	M10	12	-	10.5	12	-	6.7	7	-	-

Dimensions of the PG blocks

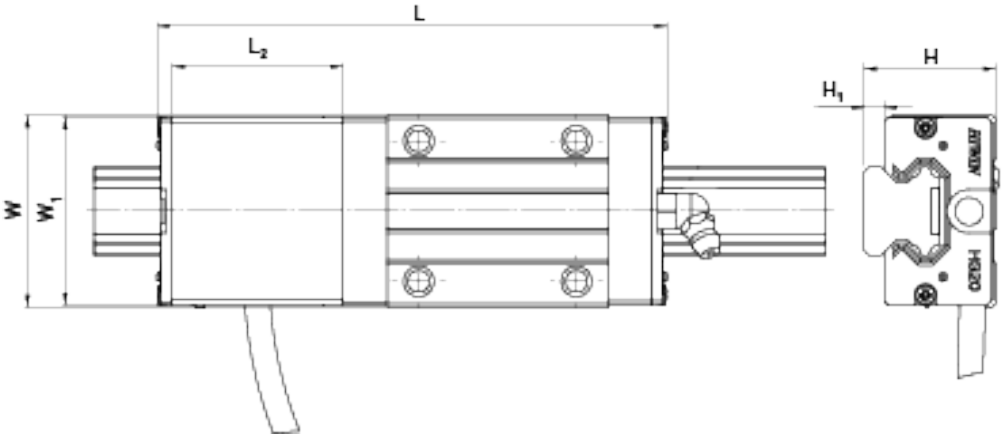

Series/ Size	Dimensions of the PG blocks					
	L	L_2	W	W_1	H	H_1
CG_30C	105.9	0	90	0	42	7

Rail measurements [mm]

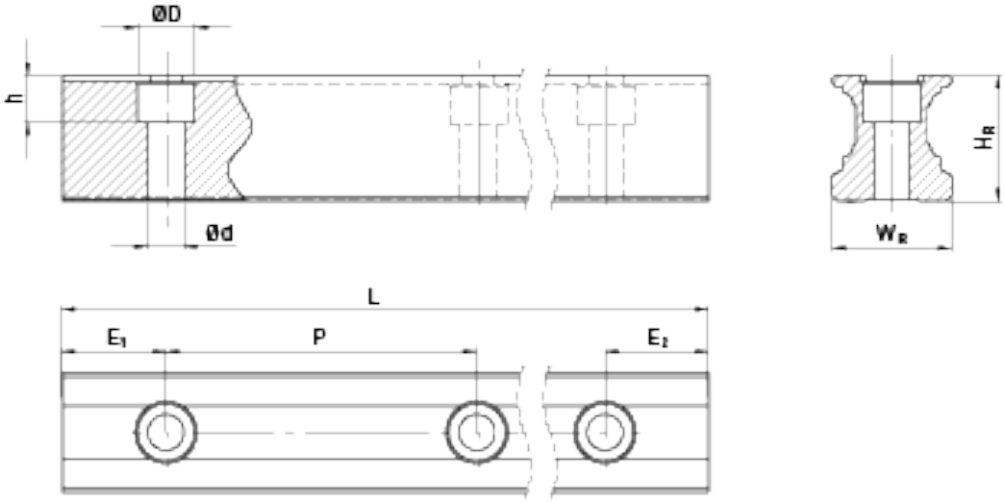

Dimensions of strip cover strip [mm]

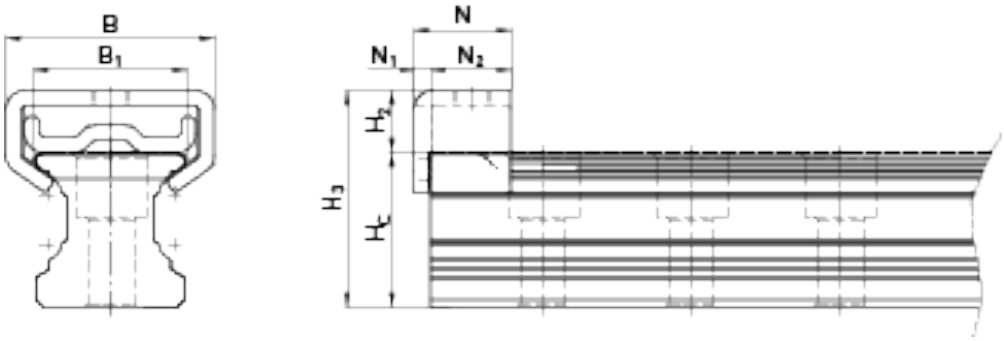

Series/ Size	Dimensions of profile rail with steel clamp							
	H_3	H_c	H_2	N	N_1	N_2	B	B_1
CG_30	37.4	28.2	9.2	12	2.2	9.8	34	28.9

specification of the HIWIN MAGIC-PG positioning measuring system

	1VSS (analogue)
Electrical properties	
Spezifikation Ausganssignal	sin/cos, 1 V_{SS} (0,85 V_{SS}- 1,2 V_{SS})
Resolution	Infinite, signal period 1 mm
Repeatability bidirectional	0,003 mm
Absolute accuracy	± 20 µm/m
Reference signal[1)]	Periodic index impulse at a distance of 1 mm
Phase angle	90° ± 0,1° el
DC component	2,5 V ± 0,3 V
Distortion factor	Typ. < 0,1 %
Operating voltage	5 V ± 5%
Power consumption	Typ. 35 mA, max. 70 mA
Max. measurement speed	10 m/s
EMC class	3, according to IEC 801
Mechanical properties	
Housing material	High-quality aluminium alloy, encoder bottom made of stainless steel
Max. cable length[2)]	1.000 mm
Min. bending radius cable	40 mm
Protection class	IP67
Operating temperatures	0°C to +50°C
Weight of MAGIC-PG encoder	80 g

[1)] Can be used e.g. with reference switch

[2)]For use in energy chains, we recommend our pre-assembled encoder cable with a pre-mounted M17 round connector (coupling, female) on one side, which matches the optional M17 round plug connector (male) of the encoder. For details, please contact your HIWIN technician.

Magnetic tape specification

Properties	MAGIC-PG
Accuracy class[1)]	± 20 µm/m
Linear expansion coefficient	11,5 x 10^{-6}m/K
Period	1 mm
Thickness magnetic scale	1,70 ± 0,10 mm
Thickness magnetic scale + protective cover tape	-
Width	10,05 ± 0,10 mm
Maximum length	24 m
Magnetic remanence	> 240 mT
Pole pitch (distance north – south pole)	1 mm
Single reference marks	Optional
Material	Elastomers, nitrile and EPDM
Temperature range	0°C to +50°C
Weight	70 g/m

[1)]At 20 °C

Cable and plug connector assignment

Colour of encoder cable	Round plug connector PIN no.	Signal
Brown	4 and 5	Power supply 5 V
white	12 and 13	GND/0V
Green	9	V1+/A
Yellow	1	V1-/$\overline{A}$
Blue	10	V2+/B
Red	2	V2-/ $\overline{B}$
violet	3	Ref+/Z
Grey	11	Ref-/$\overline{Z}$
	Plug connector housing	Shielding

PIN assignment of the round plug connector

If you wish to have a positive counting direction in the opposite direction, when connecting to the electronic evaluation system, you must switch “A” with “B and “Ā” with “Ḃ”.

Electrical signals after the difference input of the downstream electronics (analogue version)

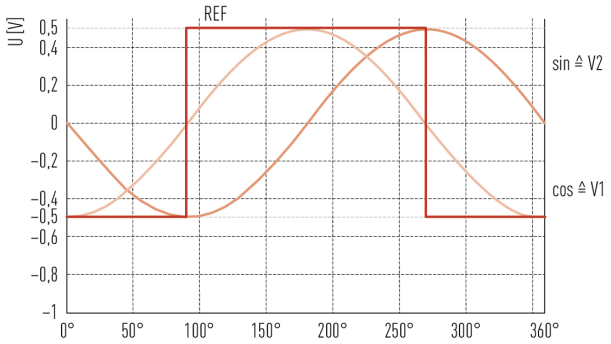

Output signals within one scale period (1,000 µm) in degrees (360° = 1,000 µm)
U[V]: Voltage [V]

Recommended switching of the downstream electronic components with sin/cos 1VSS output

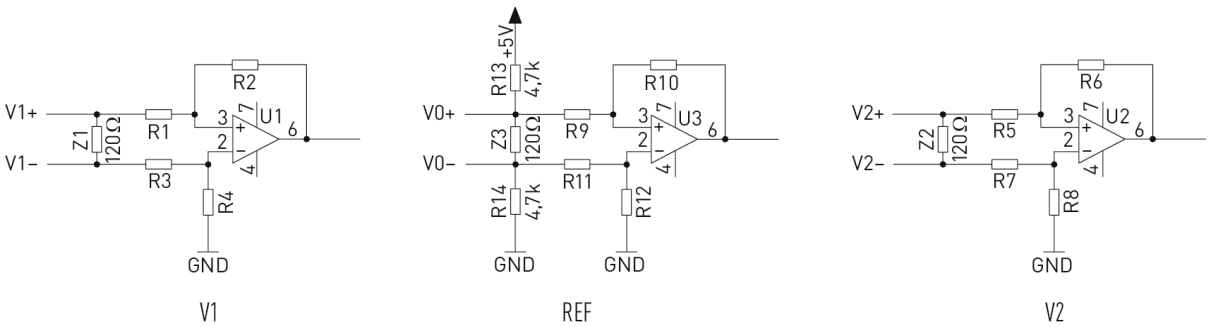

V1: A-channel / V1 channel
REF: Reference channel / V0 channel
V2: B-channel / V2 channel

Specifications for your order:

PGCW30CC1/2R3000Z0H1/1ZZX0MAM1000L1CSS
Linear Guideway with position measuring system MAGIC-PG
Initial lubrication
- Part 1 (1x): 3000 mm (20 / 37x80 / 20)
Incl. Coverstrip and strip clamping on both sides
CGW30CCZ0H+ZZX (2 pcs.)
Grease nipple 67.5°

Note:
You can find information on lubrication and assembly in our assembly instructions
https://www.hiwin.de/hiwin/de/EUR/service/downloads