Ain Shams Engineering Journal 14 (2023) 101961

Contents lists available at ScienceDirect

Ain Shams Engineering Journal

journal homepage: www.sciencedirect.com

Implementation of various control methods for the efficient energy management in hybrid microgrid system

Zia Ullah [a], Shaorong Wang [a], Jinmu Lai [b,*], Muhammad Azam [c], Fazal Badshah [d], Guoan Wu [e], Mohamed R. Elkadeem [f,g]

[a] School of Electrical and Electronic Engineering, Huazhong University of Science and Technology, Wuhan, China
[b] School of Electrical Engineering, Zhengzhou University, China
[c] School of Energy and Power, Jiangsu University, China
[d] School of Electrical and Information Engineering, Hubei University of Automotive Technology, Shiyan, China
[e] School of Optical and Electronic Information, Huazhong University of Science and Technology, Wuhan, China
[f] Electrical Power and Machines Engineering Department, Faculty of Engineering, Tanta University, Tanta, Egypt
[g] Interdisciplinary Research Center of Renewable Energy and Power Systems (IRC-REPS), King Fahd University of Petroleum and Minerals (KFUPM), Dhahran, Saudi Arabia

ARTICLE INFO

Article history:
Received 28 July 2022
Revised 24 August 2022
Accepted 2 September 2022
Available online 19 September 2022

Keywords:
Microgrid
Energy management system
Artificial neural network
Fuzzy logic
Sliding mode controller
Maximum power point tracking

ABSTRACT

A hybrid microgrid is an energy system composed of multiple power sources such as photovoltaic panels, wind turbines, fossil-fuel generators, converters, battery storage systems, and an energy management system that guarantees stability and balance of the entire system. According to the system operation and the meteorological conditions, the microgrid can be linked to the electrical grid or work as a standalone system. The battery storage system is the key element of the microgrid and is integrated to maintain the load demand and better energy management using various controllers. In this paper, we presented an overview of energy management and control of the hybrid microgrid by proposing the implementation of the most cited control methods such as artificial neural network, fuzzy logic, sliding mode controller, and proportional integral derivative. Further, we addressed the solar power maximization using maximum power point tracking based on a developed artificial neural controller and compared it with the other controllers. Finally, implementing the proposed four controllers for the developed hybrid microgrid offers to find the best control strategy with multiple aspects and implications. Matlab/Simulink software was used to design a hybrid microgrid with two buses, AC Bus and DC Bus, to supply the power and fulfill the investigated load demands. The simulation is carried out for complicated system operation scenarios with multiple changes in system variables such as weather conditions and load demand to test the robustness of each controller. The simulation results and comparison show the performance of each control method in terms of voltage control, frequency stabilization and energy saving.

© 2022 THE AUTHORS. Published by Elsevier BV on behalf of Faculty of Engineering, Ain Shams University. This is an open access article under the CC BY license (http://creativecommons.org/licenses/by/4.0/).

1. Introduction

1.1. Motivation

The consideration of renewable energy resources, dynamic loads and battery storage systems in the power systems are trending in modern power systems. Consequently, in the context of the present technological developments transforming the conventional power system into smart microgrid systems due to various technical and economic advantages such as system reliability, economic prices, integration and management of renewable energy sources, and greenhouse gas reduction. As a result, it is critical to monitor and regulate the increasingly complex and unpredictable aspects that characterize the electric system. However, besides the techno-economic benefits, it is important to monitor and manage the overall microgrid because the high penetration of renewable sources and dynamic loads connectivity into the microgrid system poses design and operation encounters. Indeed, the implementation of various control methods for efficient energy manage-

* Corresponding author.
E-mail addresses: ziaullah@hust.edu.cn (Z. Ullah), laijinmu@zzu.edu.cn (J. Lai).

Peer review under responsibility of Ain Shams University.

Production and hosting by Elsevier

https://doi.org/10.1016/j.asej.2022.101961
2090-4479/© 2022 THE AUTHORS. Published by Elsevier BV on behalf of Faculty of Engineering, Ain Shams University.
This is an open access article under the CC BY license (http://creativecommons.org/licenses/by/4.0/).

Nomenclature

ANN	Artificial Neural Network	MPPT	Maximum Power Point Tracking
ANNC	Artificial Neural Network Controller	PCC	Point of Common Coupling
BSS	Battery Storage System	PID	Proportional–Integral–Derivative Controller
DC	Direct Current	PMSG	Permanent Magnet Synchronous Generator
DG	Distributed Generation	PV	Photovoltaic
EMS	Energy Management System	PWM	Pulse Width Modulation
FFNN	Feed Forward Neural Network	SMC	Sliding Mode Control
FLC	Fuzzy Logic Controller	SOC	State of Charge
MPC	Model Predictive Control		

ment and control in microgrid systems is necessary in order to investigate the optimal control and operation of the microgrid.

1.2. Literature review

The microgrid is categorized as a small-scale regional electrical power system or controlled entity that can operate individually as a standalone system or connected to the local grid as a supplemental power solution and/or to improve the power quality of the customers within a defined area. It consists of distributed generation (DG) units, loads, energy storage elements, and control units [1]. Also, the conventional distribution networks are transforming into active networks in terms of integrating renewable-based DGs due to their various techno-economic benefits [2–4]. In contrast, a microgrid is examined as the future of power systems and are upcoming new-generation electrical power system structure, particularly for reducing the system cost and increasing the supply security. Furthermore, the transition into sustainable electrical power grids demands the alliance of hybrid renewable energy arrangements and structures. Therefore, it suggests exclusive convenience in the planning and operation of electrical power system structures such as sustainable energy-based distributed microgrids [5].

A microgrid can be characterized according to the power supply mode called DC, AC, or hybrid DC-AC microgrid. Compared to an AC microgrid, the DC microgrid has various advantages, including fewer controllable parameters, easy integration, and simple construction. On the other hand, the AC type requires additional information, such as frequency and reactive power synchronization, complicating the control design process. Additionally, a DC microgrid enables the delivery of AC loads through an inverter [6]. As a result, the DC microgrid may include both DC and AC buses. However, it is important to mention that the inclusion of uncertain renewable energy sources escalates the challenge of smooth operation and continuous power transmission to the loads; therefore, an efficient Energy Management System (EMS) is required to meet the challenge. It is important to mention that the best optimal control and efficient EMS in the microgrid represents an important pillar in achieving sustainable and cost-effective planning and operation. A detailed review of the control methods for achieving sustainable energy management was presented [7]. Similarly, a review of microgrid control methods and energy management is reported in reference [8].

Numerous research articles on energy management and control of AC microgrids are available in the literature. Nonetheless, due to critical variations in AC and DC microgrids dynamics, similar control procedures cannot be used for DC microgrids. Indeed, in a typical DC microgrid architecture, the load converters and power sources are linked in parallel with the energy used or provided via the DC link. Thus, DC-link voltage control is required for the microgrid to operate efficiently and reliably [9]. Numerous control solutions have been proposed in the literature to handle the DC bus voltage concerns [10]. The Battery Storage System (BSS) plays a crucial role within the microgrid's EMS because batteries can store energy in case of surplus power and provides it again when renewable power is not enough. Definitely, the BSS is connected to the microgrid through DC/DC bidirectional converter. Therefore, the converter control is the primary part of the EMS. However, controlling bidirectional DC/DC converters in DC microgrids presents several issues of stability at the DC bus [11].

Moreover, multiple studies have been reported to address the various aspects of microgrids, such as the hierarchical model predictive control for performance enhancement of autonomous microgrids is illustrated in reference [12], where the proposed method showed a positive results in terms of the microgrid's operational control, energy management, and power quality enhancement. The optimization method based on multi-objective for renewable energy sources integrated microgrid system is implemented in reference [13] for real microgrid system. The summary of recent smart grid technology advancements and future projections in the electrical power network is discussed in reference [14]. It should be mentioned that the advanced and intelligent control technologies, including Sliding Mode Control (SMC), Proportional-Integral-Derivative (PID), Fuzzy Logic (FL), and Artificial Neural Network Controller (ANNC), have multidimensional benefits of robustness, stability, optimality to ensure the strength of the DC Bus. Therefore, according to priorities, multiple types of advanced converters, including conventional controllers, have been used in the microgrid. For decades, the PID controller has been widely used in power systems. PI/PID controllers can give dependable and near-optimal performance [15]. However, the necessity of precise gain formulations might be a substantial drawback. The authors in reference [16] have used a PID controller for a standalone microgrid voltage control. In [17], a PI controller was used for the energy management control strategy to stabilize the voltage of the DC bus for a microgrid composed of the solar system and fuel cell. The authors of reference [18] employed the PID to control the bidirectional DC/DC converter for the standalone microgrid and compare the obtained results with the ANNC controller. Reference [19] proposes PID to control buck/boost converter used in renewables energies to increase the system stability. However, the PID controller's main drawback is finding the optimum parameters at each variation in the system.

The SMC was also applied in many previous works to control DC/DC bidirectional converter. For example, reference [20] developed an SMC algorithm to control the buck-boost converter in order to regulate the battery voltage during the charging and discharging process. In [21], another SMC controller was used to control bidirectional DC/DC to achieve effective output voltage regulation and good dynamic stability. Moreover, an equivalent SMC was proposed in [22] for a DC microgrid to solve the limitation of PID controller instability and optimal parameters of the PID controller. In [23], a fast response SMC with a multi-inputs quadratic boost converter system is proposed in reference to ensure a model reference robust dynamics against the variations of operating conditions, system parameters and external disturbances of a hybrid solar/wind DC microgrid. In addition, the sliding

mode controller was also applied for a hybrid AC/DC microgrid composed of multiples renewables power sources to guarantee the optimal operation of the system in the presence of uncertain power generation and dynamic loads [24]. Obviously, most of the SMC in the literature are used to enhance microgrid stability and solve the problem of adjusting PID controller parameters. Similarly, the intelligent controller is applied to control bidirectional converters to manage the energy of the microgrid. However, a mathematical model for the control is the main drawback of the conventional controller due to the high degree of microgrid nonlinearity.

An FLC is regarded as one of the most advanced intelligent ways of controlling complex systems. A simple strategy has no requirements for the precise mathematical model of the microgrid to regulate it. Unlike conventional control approaches, this solution tackles the control problem by combining prior experience and physical system design expertise [25]. Multiple FLC has been implemented before for the control of bidirectional converters. In [26], an FLC was proposed to control the voltage and frequency of a hybrid solar/wind/hydro/battery microgrid based on a bidirectional converter, taking into account the time-varying demand (linear, nonlinear and dynamic loads), but without Maximum Power Point Tracking (MPPT) of solar and wind power. A low-cost control strategy that uses FLC proved the benefits of fast DC link voltage retrieval speed and better efficiency for charging and discharging cycles of the super-capacitor, which reduces the stress on the battery and extends its useful life as presented in [27].

Moreover, in [28], the BSS energy and control system has been implemented using the DC-DC bidirectional buck-boost converter based on a Fuzzy Logic controller. It can be mentioned that the FLC has been highly used to control the bidirectional converter. However, the drawback of this method resides in the adjusting of parameters to work correctly, and it takes a long time to program.

On the other side, the ANN approach has been widely applied to control the bidirectional converter with different microgrid configurations and topologies. The ANN controller application controls the bidirectional converter to protect the battery against overcharging and over-discharging. For instance, in [29], an ANN controller was applied for microgrid energy management and smooth operation. In [30], the ANN-based EMS is proposed for controlling power in AC–DC hybrid grid-connected microgrid via controlling the system's converters in the optimal operation mode through the trained ANN. Reference [31] presented a real-time EMS using a neural network controller with a multi-agent system to manage the power flows along the entire solar/wind/battery DC microgrid. The above-cited works show the relevance and efficiency of ANN in the control of a bidirectional converter. Nevertheless, there are also some drawbacks, like the long training to process the extensive neural network and the large quantity of data needed for good predictions.

With further analysis of the recent literature studies, some interesting investigations related to microgrid energy management and control challenges are reported. Adequate and robust solutions using novel optimization techniques can be found in recent studies. For instance, the reference [32] proposes a novel power management strategy (PMS) for a hybrid microgrid energy management. Furthermore, a hybrid microgrid's optimal battery management system design was proposed in reference [33]. Furthermore, the energy management algorithm is employed in reference [34]; the main objective of the proposed algorithm was to solve the supply–demand problem in the microgrid. Moreover, a novel flexible power support control and voltage stabilization were performed in a hybrid AC/DC microgrid [35]. Similarly, the effective power management and control in the hybrid microgrid were addressed in [36]; the authors proposed novel adaptive FLC for the effective operation and control of the hybrid microgrid.

According to the literature, it is observed that single control strategies have been applied for the microgrid energy management and control; however, the implementation of multiple methods and their investigation can help to guarantee full efficiency under all operation scenarios and possible structures of the microgrid. Therefore, implementing and examining various energy management control methods is essential in terms of microgrid control and operational visibility. Furthermore, this can aid the microgrid operator for better decision-making of the superior method by investigating multiple aspects and performing measures of the different control methods. This paper covers the above research gap through adequate implementation and thorough evaluation of the various control methods applied for a typical hybrid microgrid system. The main contributions of this paper are summarized as follows:

- Designing and implementing an adequate and efficient energy management control system for a hybrid on-grid solar/wind/-battery microgrid supplying AC and DC loads.
- Examining various control methods, named PID, FL, ANN, and SMC for the proposed hybrid microgrid in order to maintain voltage and frequency stability of the microgrid system and provide proper power-sharing sources units.
- Investigating each applied control method in terms of main performance measures for fair and sufficient comparative analysis.

The remainder of this paper is organized as follows. The explanation of each control method has presented in Section II. The energy management in the hybrid microgrid is discussed in Section III. Parameters of the proposed microgrid system and simulation results are illustrated in Section IV. Finally, section V concludes the paper.

2. Intelligent control techniques

In this paper, we systematically investigated and implemented numerous intelligent control techniques for a complicated microgrid system operation with multiple changes to test the applicability and robustness of each technique. The various control techniques are explained in the following subsections in detail. A summary of advantages and disadvantages of the investigated controllers is given in Table 1.

Table 1
Summary of advantages & disadvantages of the investigated controllers.

Method	Advantages	Disadvantages
ANN	• Incredible performance in the current control situation • Self-learning controller	• Response time is slow, and the system is more complicated. • Large-scale data is required for the operation and control.
Fuzzy logic	• Variations in the parameters have no or rare effect on the performance and operation. • It's suitable for both remote and large-scale nonlinear systems.	• The controlling progress is slow • The creation of complicated rules
SMC	• Consistent performance during transients and fluctuation states • Minimization of total harmonic distortion	• Discrete implementation of the Chattering Phenomenon • Procedure for creating a complex design

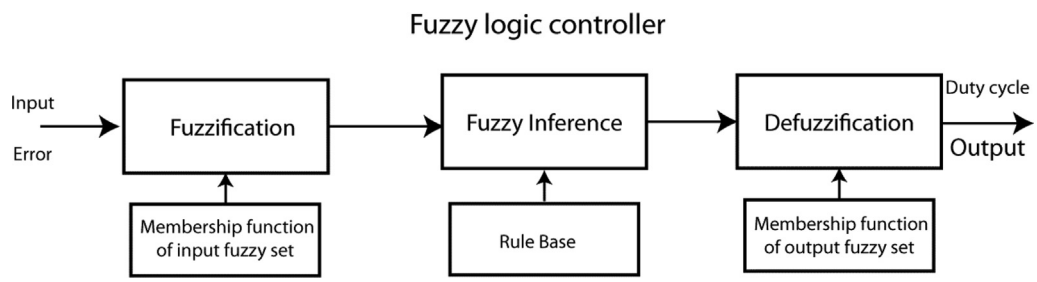

Fig. 1. Hierarchical Structure of FLC.

2.1. Fuzzy logic controller design

The fuzzy theory was suggested in [37] to quantify notions that could not be specified precisely. The design of a controller, a fuzzy logic control system, is based on the fuzzy-logic reasoning technique. The FL technique aims to generate the best possible buffer zone between 0 and 1 using the segments none-zero and ones. Fig. 1 depicts the overall structure of fuzzy logic control. Fuzzification, membership, rule base, fuzzy inference, and defuzzification are all components of the FLC.

The main advantage of FLC design is that using expert knowledge of the system to be regulated instead of complex and precise mathematical modeling. In the fuzzy controller, there are two inputs called the Error the *(e(k))* represents the relation between the output voltage value $V_{out}(k)$ and the voltage reference value V_{ref}, and another input of the FLC called *ce(k),* which indicates the difference between consecutive errors as expressed in Eqs. (1) and (2) [38].

$$e(k) = V_{ref} - V_{out}(k) \tag{1}$$

$$ce(k) = e(k) - e(k-1) \tag{2}$$

The variation in the duty cycle is fed to the fuzzy controller's output, which is fed to the Pulse Width Modulation (PWM) block, and then the PWM output is fed as a switching signal to the bidirectional DC-DC converter [39].

This paper implements a fuzzy logic controller strategy for the bidirectional DC-DC converter control. The reactions of the fuzzy controller to several parameters such as input voltage and output load have been explored and investigated to evaluate the developed controller performance. The fuzzy membership error signal and membership functions for output are displayed in Fig. 2a and 2b.

2.2. Sliding mode controller design

Emelyanov et al. [40] proposed sliding mode control (SMC) based on the results of Phillip variable structure systems. The SMC stands out from other control systems like PID because of its robustness against system parameter fluctuation, modeling uncertainty, and external disturbance. Furthermore, the SMC is specifically an efficient controller for DC-DC power converters control and is generally governed by transistors, operated as switching devices with "ON and OFF." Thus, this paper adopts the sliding mode control theory to regulate the Bidirectional Buck-Boost converter for microgrid control and energy management. The SMC's operating concept and design process are described in reference [41]. Compared to other nonlinear control methods, SMC has several advantages. It's simple to set up, adapts well to changes, and responds quickly, resulting in efficient performance. Nevertheless, creating chattering is supposed to be the major drawback of SMC, which escalates the challenge of high-frequency dynamics. Therefore, minimizing the chattering issue, raising the controller's resilience, and reducing reaching time are critical aspects of SMC design. In order to overcome these critical concerns, the reaching law based on an exponential term can be implemented that modifies the system state variation and sliding surface.

The sliding surface was constructed to develop SMC, and the control input has created that drove the system's trajectory to the SMC sliding surface, ensuring that the sliding mode was reached. Using the sliding mode theory, the motion of state trajectories towards stability is divided into three portions, as shown in Fig. 3 and mathematically expressed by Eq. (3)[42].

$$\begin{cases} \dot{x}_1 = x_2 \\ \dot{x}_2 = A(x) + B(x).u \end{cases} \tag{3}$$

where $x = [x_1, x_2]^T$ represents the current state of the system, where u is the switching controller.

In terms of x, A & B shows nonlinear functions, where B is invertible. The tracking error dynamics to be expressed as given in Eq. (4):

$$\begin{cases} e_1 = x_1 - x_{1desired} \\ e_2 = x_2 - x_{2desired} \end{cases} \tag{4}$$

where $\dot{e}_1 = e_2$. The nonlinear system model for expressing SMC in accordance with the reaching law can be represented by Eq. (5).

$$S = \dot{e}_1 + ce_1 = e_2 + ce_1, c > 0 \tag{5}$$

The stability of the sliding mode is ensured by Eq. (5), but the value of c determines the convergence of the system trajectory in the sliding-mode surface. The further step is to opt for the controller switching u in such a perspective that it allows the error vector to hold out the sliding surface; consequently, it ensures the sliding mode attaining condition as given in Eq. (6).

$$S\dot{S} < 0 \tag{6}$$

The reachability requirement $S\dot{S} < 0$ states that the system's representative point's position and velocity in the phase plane have opposing signs. This guarantees that the direction of motion is different on either side of the sliding surface and is always directed towards the predefined dynamics (S). As a result, the nature of the control law that can satisfy such motion needs to be discontinued, with different structures on each side of the switching surface.

By verifying the condition in equation (6), the control signal enforces the reachability and the sliding phases. However, since each phase's objective is different, the control law is partitioned into two parts, as presented in Eq. (7) [43].

$$u = u_e + u_n \tag{7}$$

where *ue* is defined as the equivalent control law, it comes to use once the system is on the sliding surface. u_n is a discontinuous signal that solves the reachability problem while stabilizing the system. The simplest answer is to define un as a relay whose commutation is determined by the sliding surface.

$$u_n = K.sign(S) \tag{8}$$

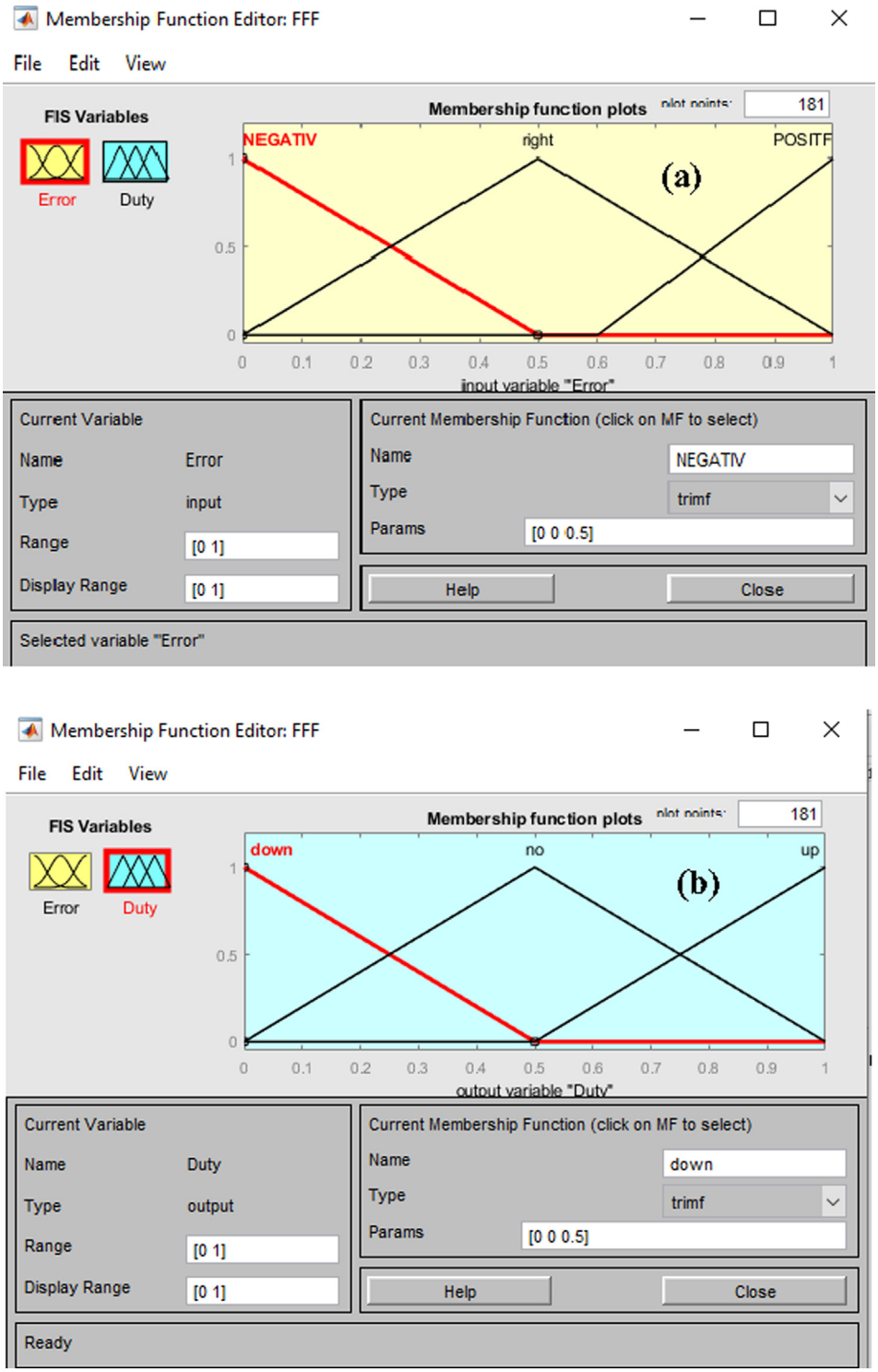

Fig. 2. (a) fuzzy membership error signal (b). Fuzzy membership functions for output.

$$\begin{cases} sign(S) = +1 if S > 0 \\ sign(S) = -1 if S < 0 \end{cases} \tag{9}$$

K is a positive gain carefully designed based on the Lyapunov stability theory.

- The system convergence speed slows down as K gets smaller.
- The system suffers from undesirable high oscillations, known as the chattering effect, at high levels of K.

In this paper, the SMC is proposed for EMS in the hybrid microgrid and to operate the bidirectional DC-DC converter by generating the duty cycle for the PWM to retain the smooth voltage and frequency at the reference DC bus voltage value.

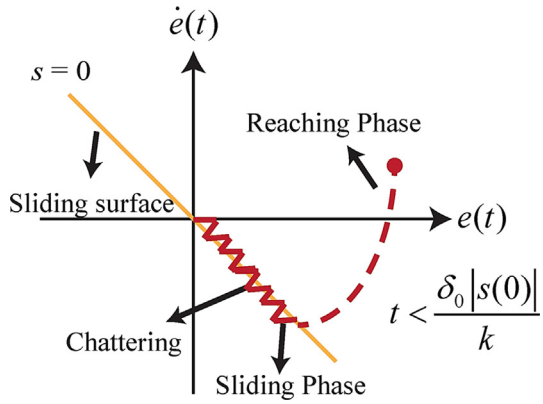

Fig. 3. Sliding Mode Controller Phase Mechanism.

2.3. ANN controller design

The artificial neural network (ANN) is a type of information processing system that seeks to mimic the human brain by simulating nonlinear processes. The bidirectional DC-DC converter microgrid uses an ANN-based controller called ANNC, which has recently been used in microgrid energy management for voltage and frequency control of the microgrid system [18]. This work offers a distributed control technique in the hybrid microgrid that is based on the NARMA-L2 controller and is designed to maintain voltage stability in microgrid control while the system is operating autonomously. NARMA-L2 is an abbreviation for the nonlinear autoregressive moving average, and it is used to demonstrate the mathematical formulation and modeling of the system. Furthermore, it deals with the system input–output stochastics in a typical discrete-time nonlinear system with limited dimensions.

Generally, the NARMA L2 controller construction to be designed comprises two neural networks. The first part of the controller uses the NARMA model, which signifies the broad discrete-time nonlinear systems during the system identification process. The second part of the NARMA L2 controller is subject to the control design, as shown in Fig. 4. The NARMA model controls the bidirectional DC-DC converter in the microgrid for energy management, according to Eq. (10).

$$y(k+d) = N[y(k), y(k-1)\cdots, y(k-n+1), u(k), \cdots, u(k-m+1)] \tag{10}$$

Based on previous input–output data (n), Eq. (11) could predict the outcome at $k+d$. Where the NAMRA-L2 model then uses the linearization method to make the system follow the desired target $Y(k+d) = Y_r(k+d)$ and control convenience.

$$\begin{aligned} y(k+d) = {} & \boldsymbol{f}[y(k), y(k-1)\cdots, y(k-n+1), u(k), u(k-1), \cdots, \\ & u(k-m+1)] + \boldsymbol{g}[y(k), y(k-1)\cdots, y(k-n+1), u(k), \\ & u(k-1), \cdots, u(k-m+1)].u(k) \end{aligned} \tag{11}$$

The system input and output at time k are represented as $u\ (k)$ and $y(k)$, respectively. Where, $f, g : R^{2n} \rightarrow R$ are the maps provided by neural networks that can be chosen based on input–output data. The $u\ (k)$ can be determined using (12).

$$u(k) = \frac{y_r(k+d) - f[y(k), \cdots, y(k-n+1), u(k), \cdots, u(k-m+1)]}{g[y(k), y(k-1), \cdots, y(k-n+1), u(k)\cdots, u(k-m+1)]} \tag{12}$$

In the case of the microgrid control intended to control the voltage, output data following the reference value, it can be easily resolved by using the control input $y_r(k+d)$. The NARMA model is used to depict the initial phase.

In this research, it is proposed to use the ANNC to manage the bidirectional DC-DC converter by producing the duty cycle for the PWM in order to maintain the DC Bus voltage at the reference voltage value. So, the ANC's output is defined as having three inputs: a reference signal, a DC bus voltage and a duty cycle value. A number of tests were conducted in order to establish a database for the ANNC. The approach evaluates the voltage and duty cycle of the DC Bus while considering the uncertainty of solar irradiation and dynamic loads.

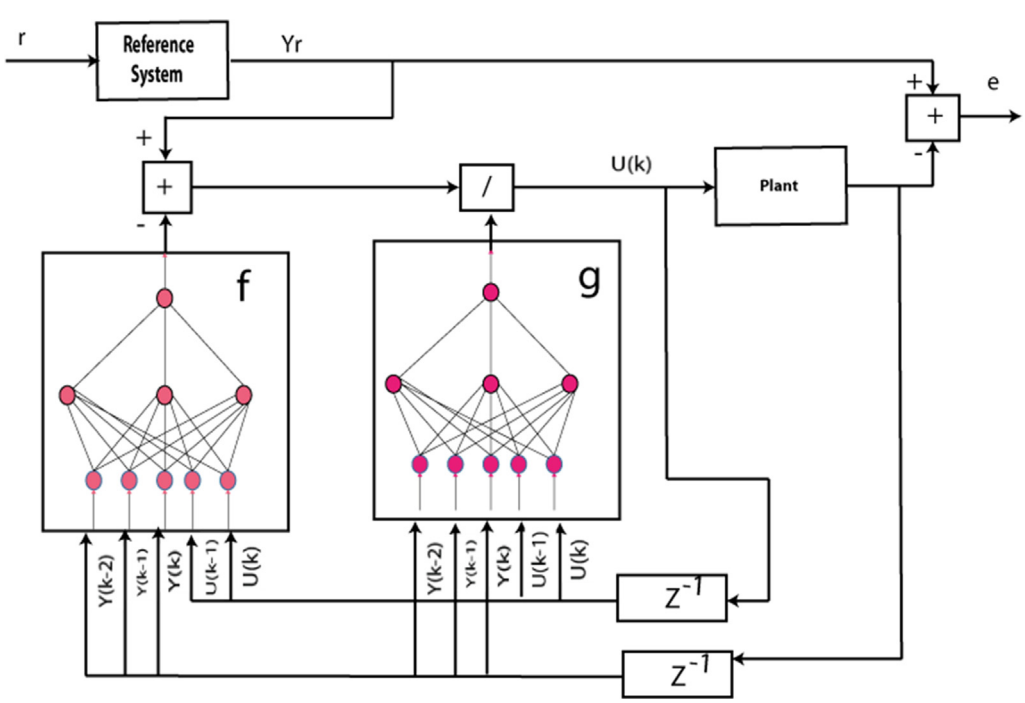

Fig. 4. Nonlinear Autoregressive Moving Average Model.

3. Hybrid microgrid energy management system

After discussing the four applied control method in section II, it is important to present the configuration of the hybrid microgrid system studied in this paper and explains the proposed energy management techniques.

The configuration architecture of the proposed hybrid microgrid under study is shown in Fig. 5.

The hybrid microgrid connects with the main power grid station through the point of common coupling (PCC) and bidirectional DC/AC converter. Wind and photovoltaic power are integrated into the DC distribution system through the DC/DC converter device to supply the power, and the battery storage is used as the backup system. In addition, the battery storage is linked with a microgrid through the bidirectional DC/DC converter to control the system voltage or supply power by performing charge/discharge operations according to the current operation mode. The PV and wind sources typically operate in MPPT mode. There are two types of loads in a DC microgrid: normal DC loads directly linked to the DC bus and alternating current loads connected to the DC bus through a DC/AC inverter.

The proposed configuration of the three controllers (ANNC, FLC, and SMC) is shown on the right side of Fig. 5 to maintain the voltage stability of the microgrid AC load frequency and provide proper power-sharing source units.

The principal goals of the proposed system are:

- Provide a power source for all system loads
- Maximize renewable energy generation
- microgrid stability and keep the DC voltage constant at 400 V.
- The frequency of the AC bus is 60 Hz.
- To prevent the battery from being overcharged or discharged

Moreover, it should be noted that concerning the system constraints during model design, we met several problems; where the main challenge in the simulation was the algebrique loop; therefore, to handle the simulation problems, we have prepared each system (solar, wind, battery, and controllers) separately, then we combine the whole system. Also, the parameters of the proposed approach were adjusted during simulation. For example, in some values of capacitor and inductance, we got the algebraic loop problems, so all parameters of converters are well adjusted during simulations.

The primary goal of the EMS in a hybrid microgrid is to meet the demands of the loads at all times, regardless of the weather conditions (Solar irradiation and wind variation). Furthermore, it ensures that the bus voltage value is within a certain range of the reference voltage value, which is 400 V. Afterwards, the battery system is responsible for ensuring that the voltage remains constant by utilizing the charging and discharging processes provided by the bidirectional DC-DC converter. Four different controllers (PID, SMC, ANN, and Fuzzy Logic) will be used to control the bidirectional converter. The data input to EMS in this paper is the State of Charge (SOC), current and voltage of the battery, the power generation from the DG unit (P_{DG}), and the load's power (P_{loads}). The flowchart of the proposed energy management system applied in this paper is displayed in Fig. 6. In this paper, the electrical grid is used for the emergency case; In the first case, if SOC < 20% and renewables powers are not enough for loads, we connect the grid to provide the required power. In the second case, if SOC > 80% and there is a surplus in a microgrid, the electrical connections, in this case, inject the surplus to keep the power balance of the microgrid.

It is necessary to activate the battery charging mode in order to charge the battery when the battery's state of charge (SOC) is low, and the surplus power generation is adequate to keep the system operating in balance. At this time, the proposed techniques control the DC microgrid voltage, and the sources perform MPPT control. Then the surplus energy is injected into the main grid through the point of common coupling managed by the EMS if there is a surplus of energy (if the battery is fully charged). It is necessary to have a storage system in place when renewable energy output falls short of what is needed to meet demand and maintain voltage and stability in the system. The solar system is the main power source for the proposed microgrid.

Therefore, the maximization of solar-generated power is essential. In this work, we presented a new controller for the MPPT that is based on artificial intelligence. The MPPT controller is based on the combination of two ANN, as illustrated in Fig. 7.

The first ANN is called a feed-forward neural network (FFNN), which produces the reference signal for the second ANN, Artificial Neural Network Controller (ANNC) type NARMA-L2, by estimating the produced power. Finally, the ANNC controller compares with the reference and the current values of the solar power and generates the duty cycle for the boost converter used to implement the MPPT strategy. The boost converter elements parameters are shown in Table 2. After several training times, the optimum archi-

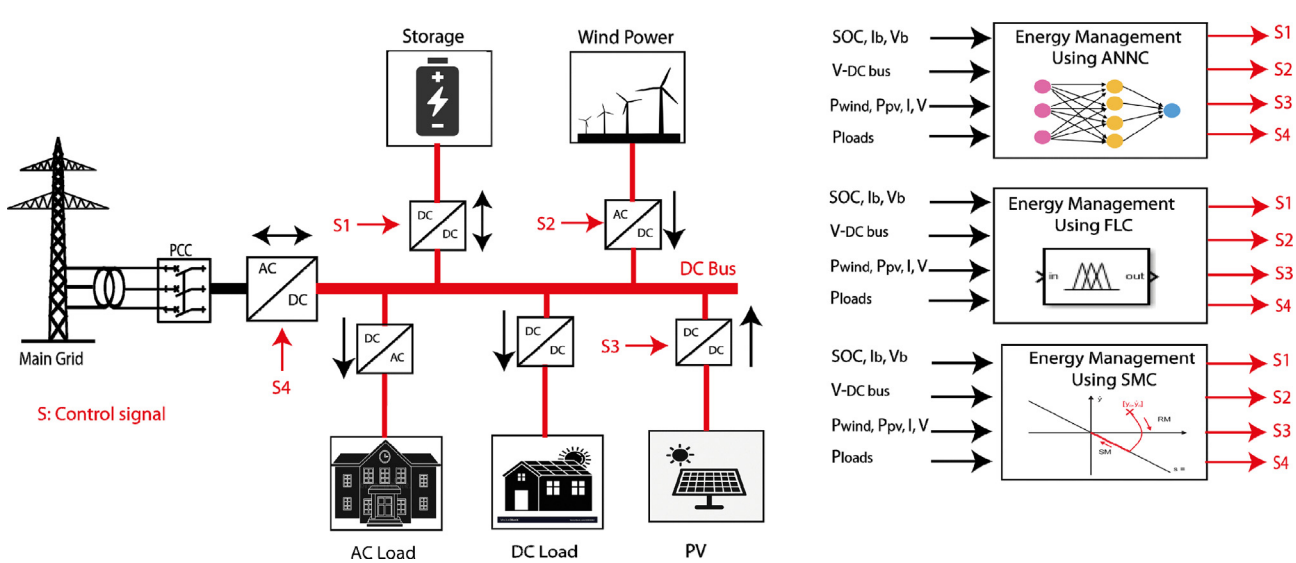

Fig. 5. The proposed hybrid microgrid with EMS.

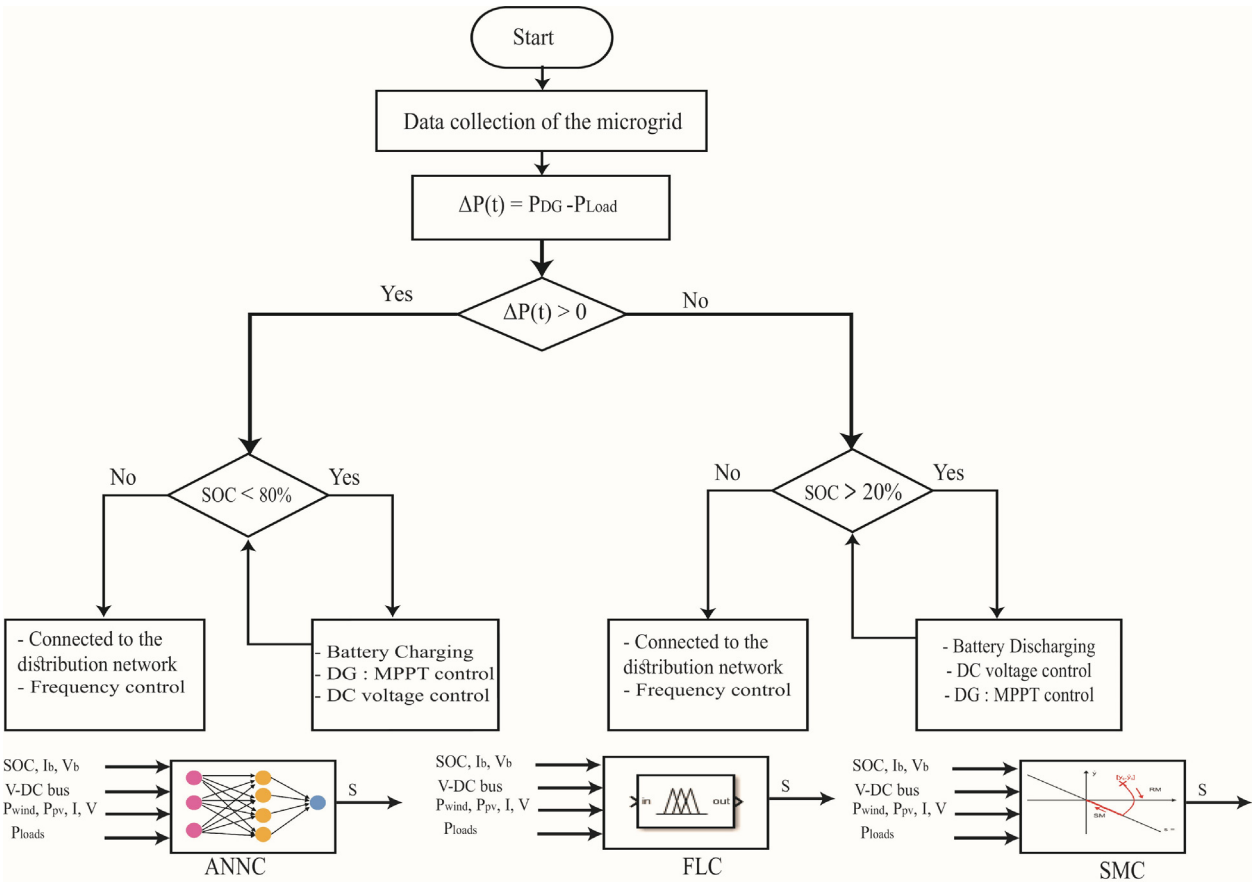

Fig. 6. Flowchart of the Proposed EMS.

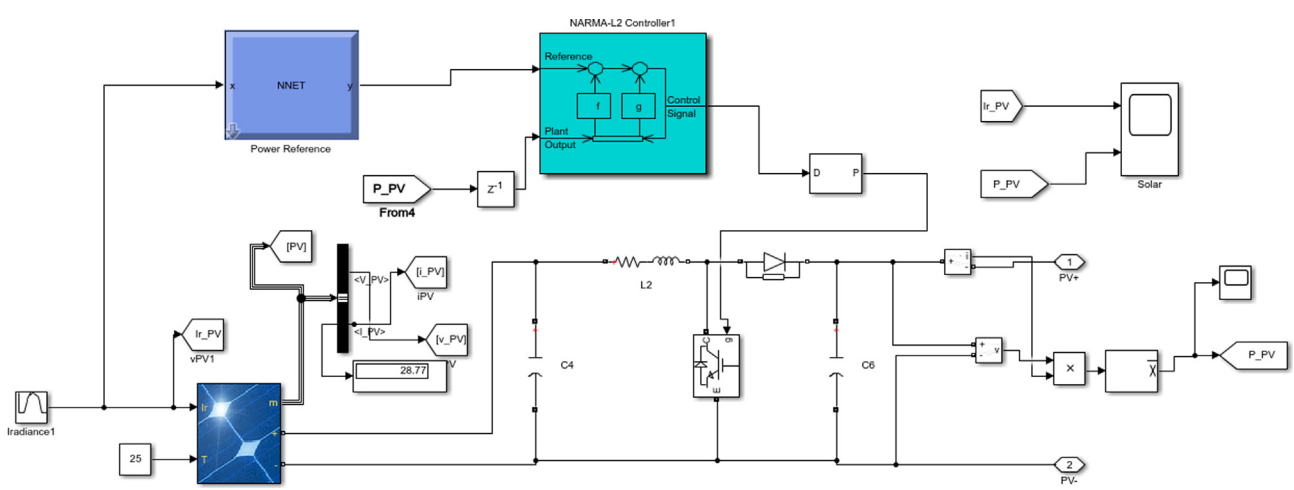

Fig. 7. Simulink Block Diagram of the Proposed Solar MPPT.

tecture obtained for FFNN is one hidden and ten neurons in this layer and 13 in the hidden layer for the ANNC, as illustrated in Fig. 8.

As can be seen in the resulting Fig. 9, the proposed controller has high efficiency in terms of maximizing solar power created when compared to the power generated by applying P&O. In the following section, we will demonstrate and examine the effectiveness of the proposed EMS using the various complex scenario.

Table 2
Boost converter parameter.

Element	Value
C2	0.001 F
L2	1e-3, 0.1 Ω
C4	0.001 F
IGBT transistor	Internal resistance Ron = 1e−3 Ω Snubber resistance Rs = 1e−5 Ω Snubber capacitance Cs = 50 F

- **Microgrid Components Specification and Requirement**

As mentioned before, the hybrid microgrid system under study hybridize solar, wind and battery elements to maintain the power demand of a group of AC and DC loads.

An essential prerequisite for investigating the four control methods is the design parameters of each element which are given in Table 3.

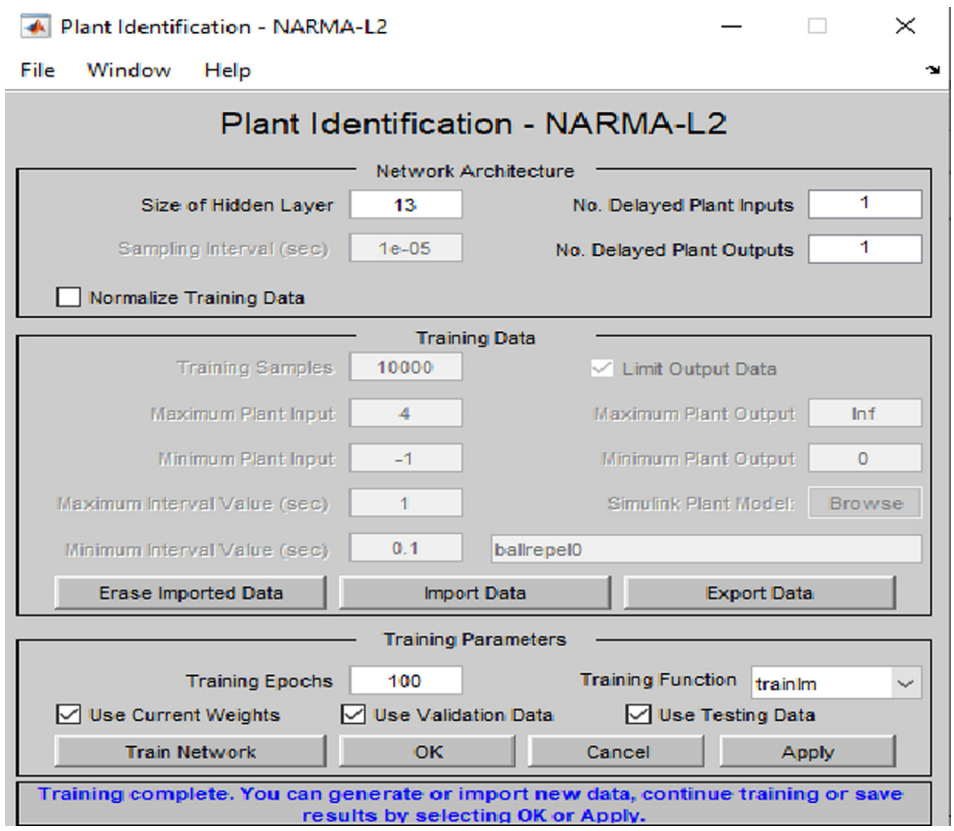

Fig. 8. Optimal Configuration of ANNC.

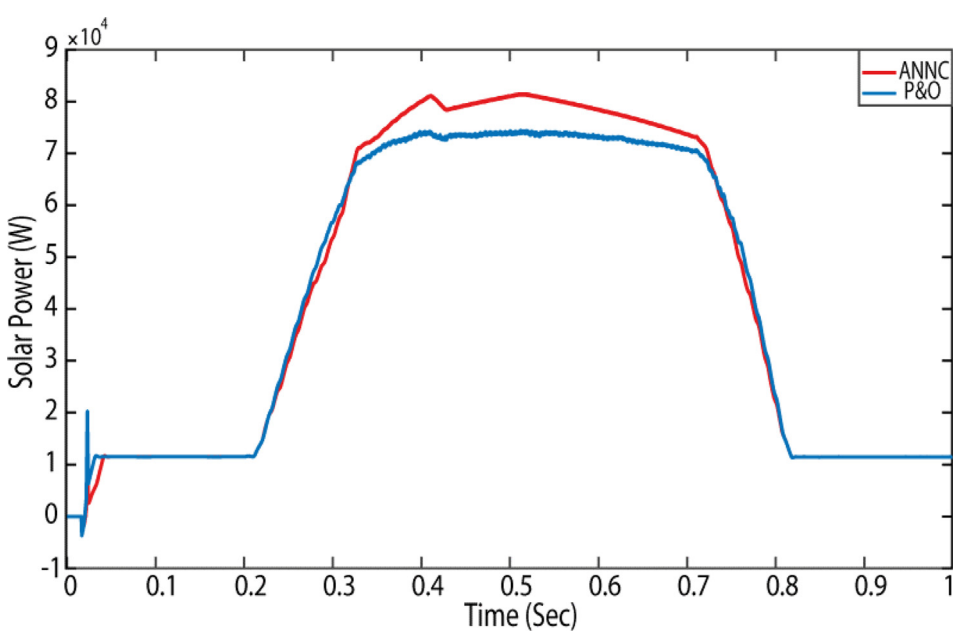

Fig. 9. Comparison of Generated Solar Power for P&O and ANN.

- **Wind Power System**

The wind power system used in this paper is shown in Fig. 10. The PMSG is directly connected to the wind turbine, and the generated output voltage is rectified using a three-phase diode bridge. The MPPT technique uses a DC-DC boost to follow the wind turbine's maximum PowerPoint. The MPPT control for the wind turbine system is based on the same principle, and the same algorithm is used for the photovoltaic panel. Table 4 shows the parameter of the wind turbine system used in the paper.

- **Solar Power System**

The photovoltaic system produces the electric power from the solar irradiance, and the generated power from the solar is integrated into the microgrid. The solar power system model is shown in Fig. 11. The overall solar power obtained from the solar panel type (Sun-power SPR-300NE-WHT-D) is used in 50 panels in series and ten panels in parallel to generate a total power of 78 kW, as shown in Table 3. Moreover, the solar power system parameters are shown below in Table 5.

4. Simulation results and discussion

In this paper, we implemented and investigated the four most-cited control methods within the hybrid microgrid system. The various aspects of each control method with a representative case study of a typical on-grid hybrid solar/wind/battery microgrid system as illustrated in Fig. 5. Herein, the simulation results are presented and thoroughly discussed.

First, the obtained results show the response of each microgrid element to system changes in various states and meteorological conditions.

Fig. 12 shows the solar irradiation used in the simulation. The irradiation is set to zero w/m^2 at the start of the simulation and subsequently increases to 1000/m^2. The irradiation reduces after 0.6 s and continues to decrease to zero again when the simulation is completed, similar to the daily trajectory of solar.

Table 3
Microgrid components specification.

Microgrid Element	Characteristic
DC BUS	V = 400 V; P = 20 kW
AC Bus	V = 400 V, P = [0, 40, 70, 30] kW
Battery	V = 200 V; Q_Batt = 280 Ah
PV Total Power	P_{pvm} = 78 kW,
Wind Turbines Power	P_w = 40 kW

Table 4
Characteristic of the wind turbine.

PMSG Parameters	Values
Inductance armature	0.14 mH
Stator resistance	5.7 mΩ
Armature inductance	0 0.14 mH
Induced magnetic flux	0.047 Wb
Inertia	0.000003
Number of poles	4

Fig. 13 shows the wind speed profile proposed for this simulation. At the start of the simulation, the wind speed was stable at 13 m/s, then decreased to 8 m/s, and increased again to 15 m/s, which is the maximum wind speed.

Fig. 14(a) and 14(b) show the power generated by the photovoltaic and wind turbine subject to solar irradiation and wind turbine scenarios in Figs. 12 and 13.

Fig. 15 compares the sums of renewables produced (Solar + Wind) power and the connected loads (AC + DC) power. The blue curve represents the load's power demand, and the red curve shows the power generated by renewable energies. As we can see from this comparison, we have an imbalanced power profile during the investigated time duration. At the beginning of the simulation, as shown in Fig. 15, the sum of the power generated by the renewable energy sources is more than 20 kW (loads demanded). Between t = 0.3 s and t = 0.6 s, the load demands are more than the produced power from renewable sources. Therefore, an efficient energy management system is needed to ensure the balance between the power production and loads requested which is also necessary for the stability and the efficiency of the microgrid.

As we mentioned before, the battery storage acts as a key element of the EMS, which is linked to the microgrid bus through the DC-DC bidirectional converter. In addition, the control of this converter was the main contribution of this paper.

We have controlled the battery converter using three different controllers. The following simulation results show the comparison of results obtained after the simulation of each controller.

Fig. 16 compares the obtained state of charge while applying the energy management system. In the comparison, the response of each controller to be observed is subject to battery SOC conditions, i.e., PID, ANN, FL and SMC.

In order to investigate the battery storage power, the simulation was performed to show the impact of each controller concerning battery storage system power. Fig. 17 shows the variation of battery power during the application of each controller. At the beginning of the simulation, we have a random variation; we can consider this time interval (transitory interval). Between t = 0.2 s and t = 0.3 s, the loads requested are more

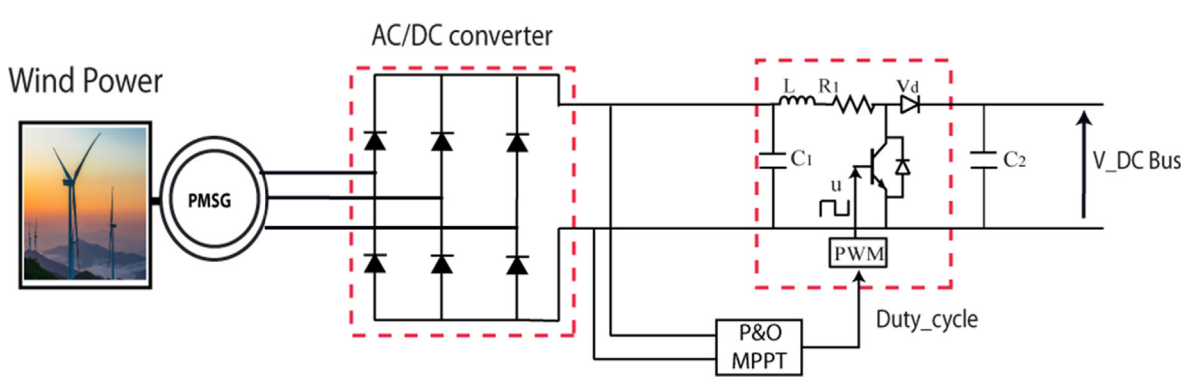

Fig. 10. Wind Power System Model [44]

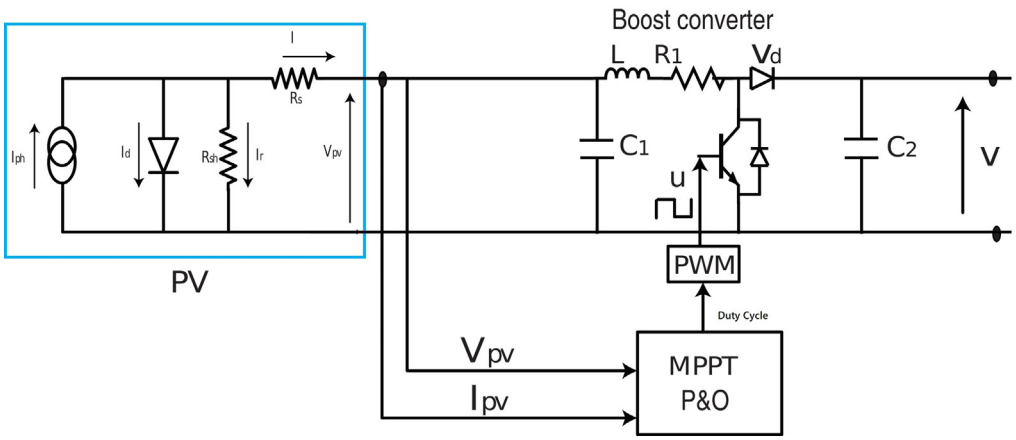

Fig. 11. Solar Power System Model.

Table 5
Solar power system parameters.

Parameter	Value
Nominal power	300 W
Current at maximum power IMPP	5.68 A
Open circuit voltage, V_{co}	52.58 V
Short-circuit current I_c	6.05 A
Maximum power voltage VMPP	49.58 V

than the produced power at the beginning of this interval (see Fig. 16).

For this reason, we can see that state of charge decrease with all controllers, and the positive value of the battery means that the battery offers the needed power microgrid loads, and it can effectively fulfill the load demands in case of power shortage or load increase. Then at t = 0.27 s, the renewable power becomes more than the requested power, the SOC curves directly increase to store the surplus power, and the battery power becomes negative. Between t = 0.3 s and t = 0.6 s, the loads demanded an increase to 90 kW, and the renewables produced power, so the stored power will be delivered again to keep the balance, which is clear in the graph of the SOC, decreasing the positive values of battery power. The increase in the curves of state charge again at t = 0.6 s is due to the high value of the power produced by renewable energies.

Some processes are repeated in all intervals when the power demands go up and or more than the power available. The battery act in the discharging state, and the then battery charge again when sufficient power is available or more than the load power demands.

During the application of each controller, the simulation was made with some value of the initial battery state of charge of 70%. At the beginning of the simulation, we can see a strong discharging condition due to the high value of the current value at the beginning. Generally, we don't consider this time interval. From the comparison of the battery state of charge and power, we can see:

- Some curve variation structure for all controllers.
- A big similarity between the PID and ANN curve

Hence, we can conclude from the above comparison that the high performance of the FL controller in saving energy compared to the other controller. The stabilization of power, voltage and frequency of the microgrid is the primary goal of the energy management system. In the following figure, we will illustrate the measurement of each parameter in the microgrid AC and DC BUS. Fig. 18(a) shows the comparison of power measured at the

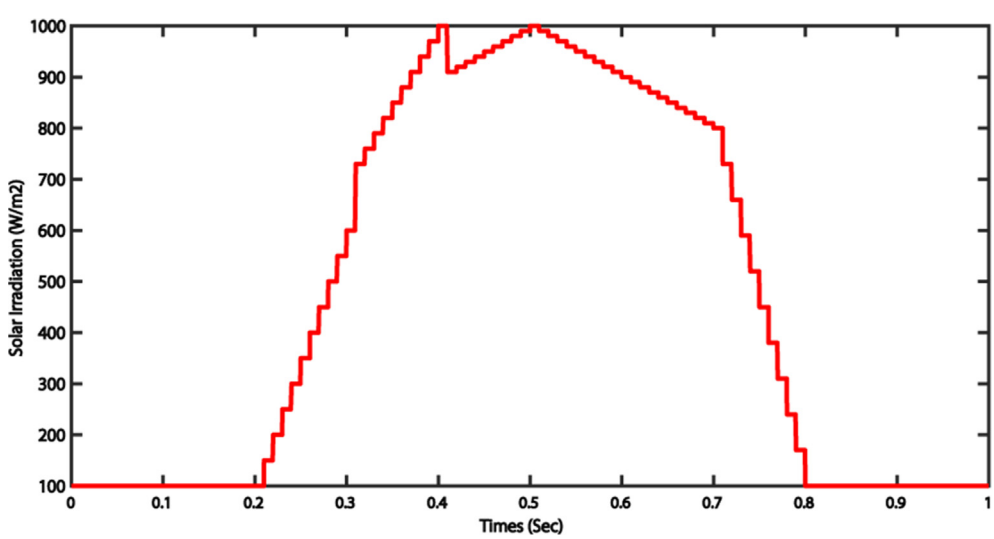

Fig. 12. Proposed scenario for solar irradiation (W/m^2).

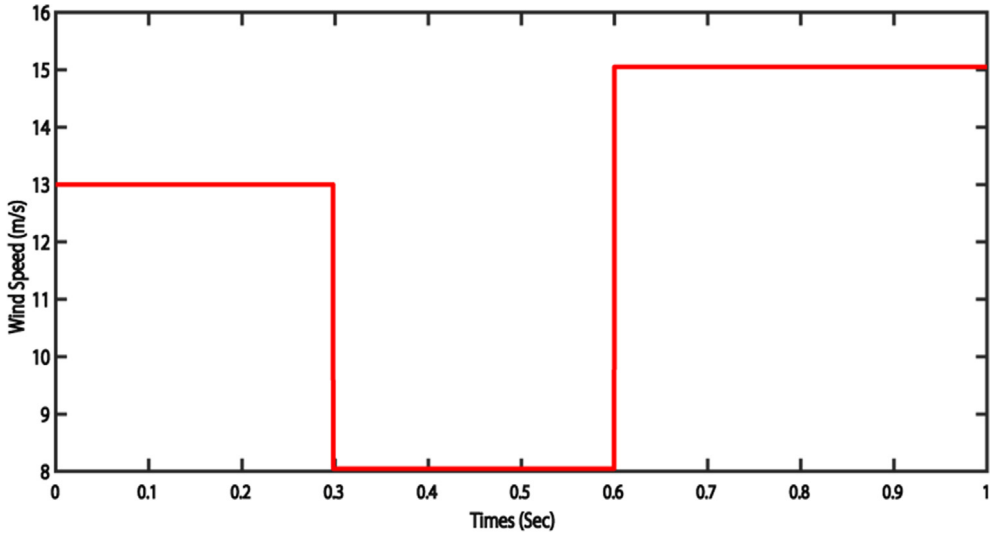

Fig. 13. Proposed scenario for wind speed (m/s).

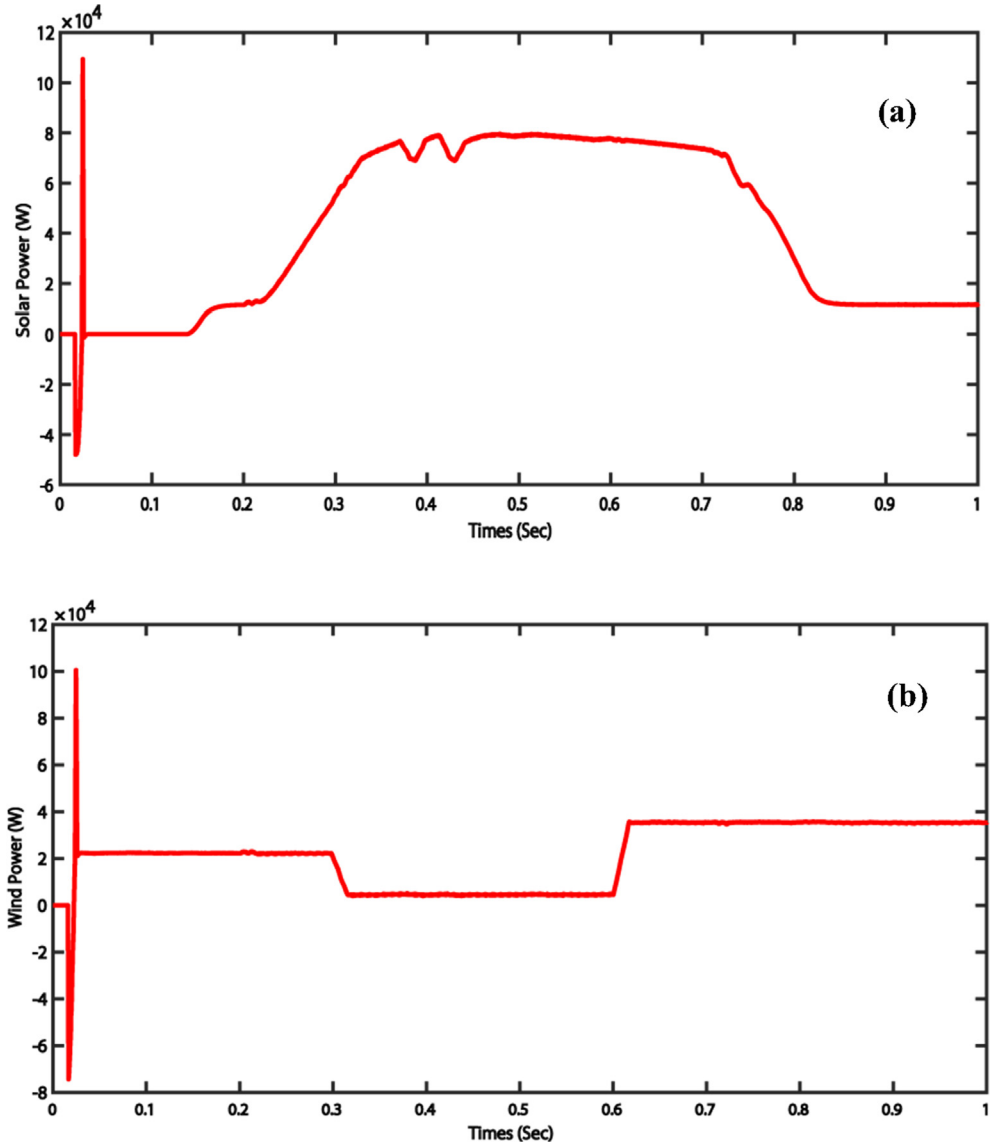

Fig. 14. Generation profile (a) Solar photovoltaic power (b) wind turbine power.

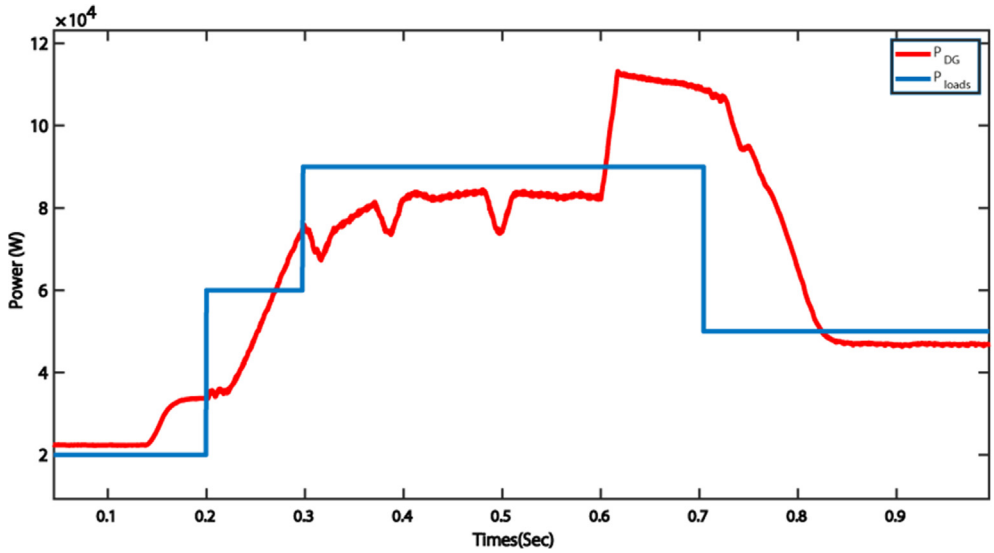

Fig. 15. Comparison between DG produced power and requested load demand power.

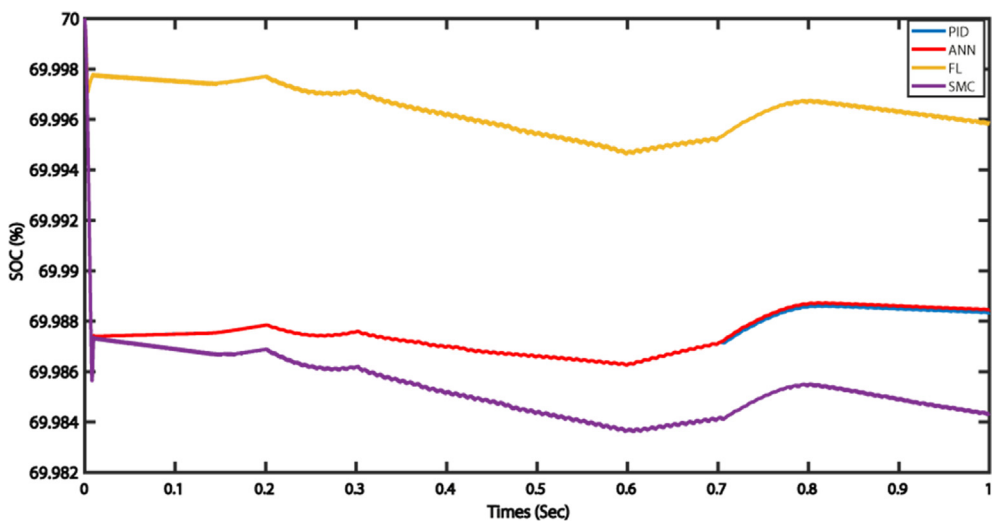

Fig. 16. Measured Battery State of Charge During Application of Each Controller.

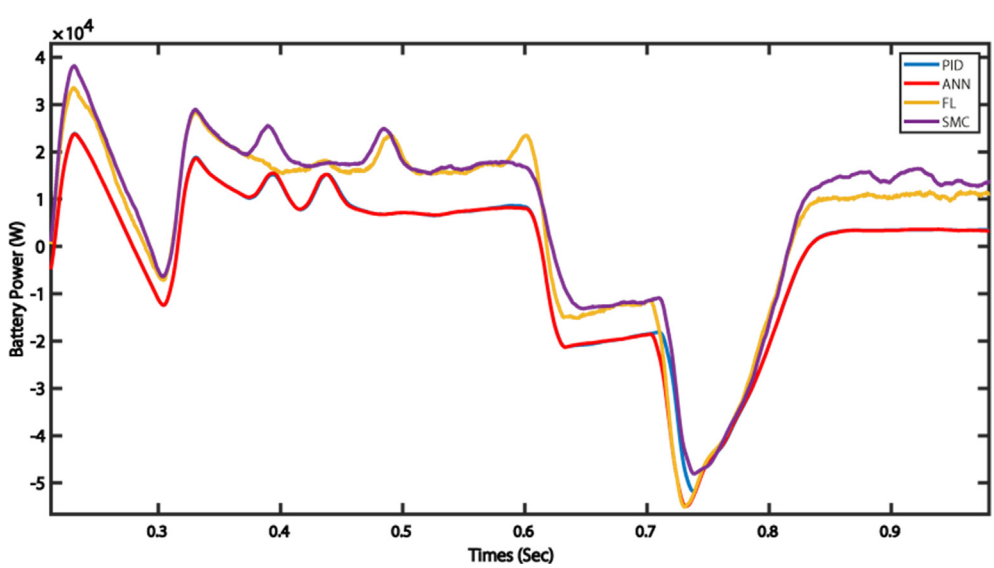

Fig. 17. Measured battery power with each implemented controller.

DC bus during the simulation of the microgrid with each controller. Fig. 18(b) represents a small interval of Fig. 18(a) to figure out the best controller for the stabilization of the DC Bus. In the small interval zoomed results, it can be seen that the ANN and PID controller offers a smoother power profile than the FL and SMC controllers.

Similarly, Fig. 19(a) and 19(b) show the comparison of voltage measured at the DC bus during the microgrid simulation with each controller. As mentioned earlier, this study aims to propose various control methods and perform the simulation to balance the power and the voltage of the DC bus in the hybrid microgrid system. As we can see from Figs. 18 and 19, the power measured at the DC bus is stable at 20 kW, and voltage at V = 400 V for all controllers, with a different variation.

We conclude from Figs. 18 and 19 that ANN and PID's controllers are more efficient than the FL and SMC in stabilizing DC bus power and voltage. Fig. 20 shows the comparison of the measured AC power during the application of each controller, i.e., PID, ANN, FL and SMC.

Moreover, Fig. 21 portrays the frequency variation of the investigated hybrid microgrid system, where four techniques, PID; ANN; FL and SMC, are in the limit frequency merges was ± 0.02. It can be seen that minimum variation is recorded in the frequency corresponding to the FL response after calculating the frequency deviation mean for each technique.

Therefore, we conclude from the simulation results that the performance of the FL controller is better in the frequency stabilization or well adaptive to frequency variation at the DC bus of the hybrid microgrid system.

5. Conclusions

This paper presents the implementation of various control methods for a hybrid microgrid and investigates the implications of each applied method. In this paper, we addressed four control methods based on artificial neural network, fuzzy logic, sliding mode controller, and proportional-integral-derivative and inde-

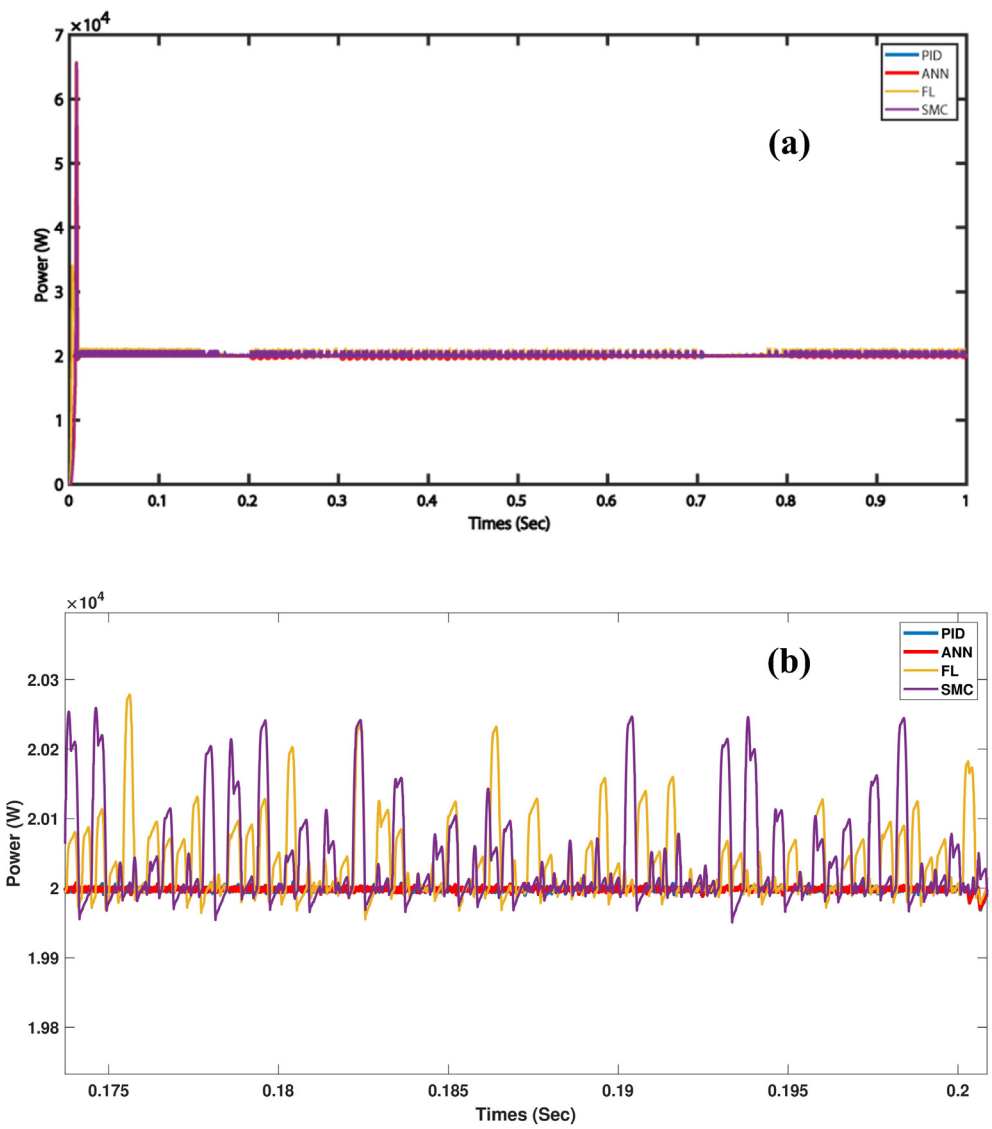

Fig. 18. (a) DC bus power measured during with each implemented controller (b) small interval, zoom view.

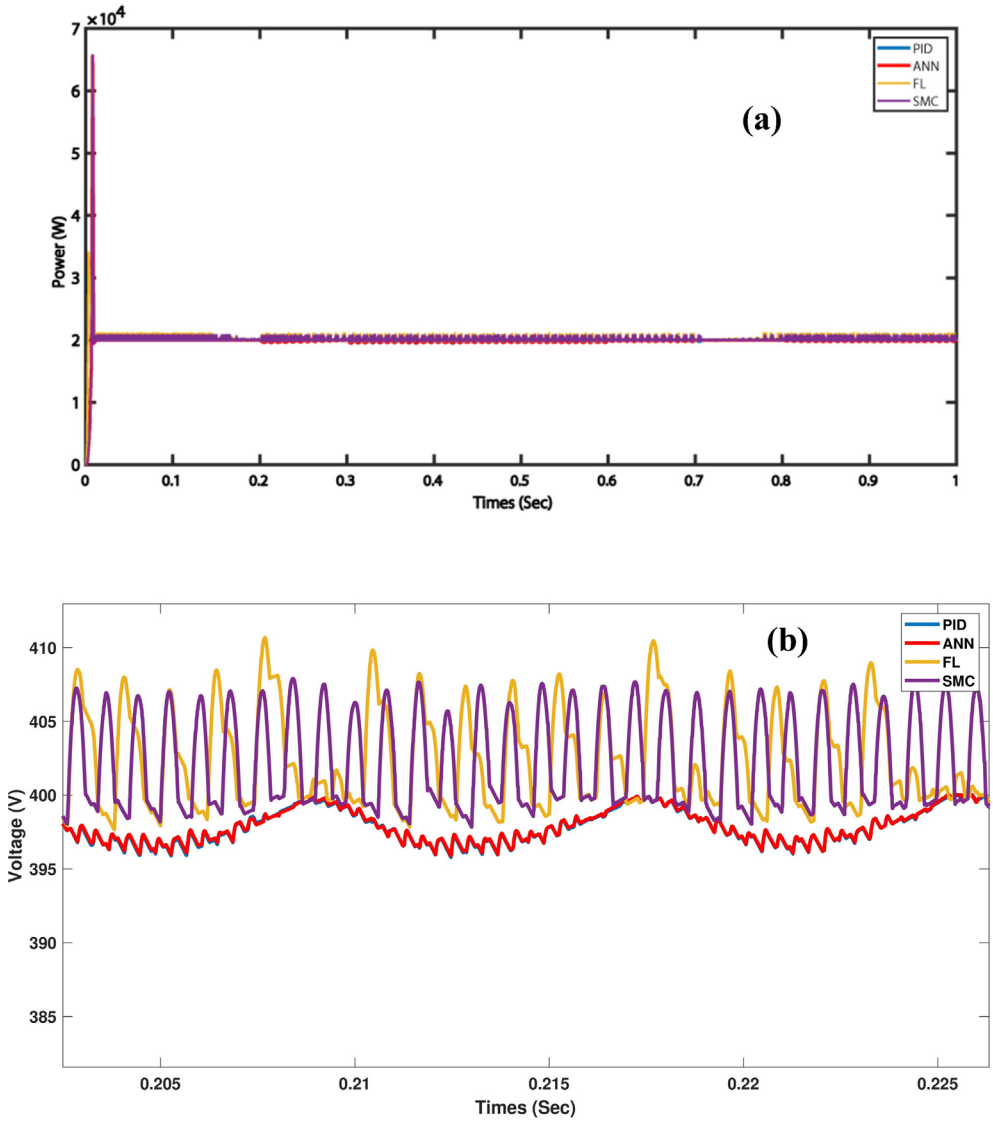

Fig. 19. (a) DC bus voltage measured during the application of each control method (b) small interval zoom view.

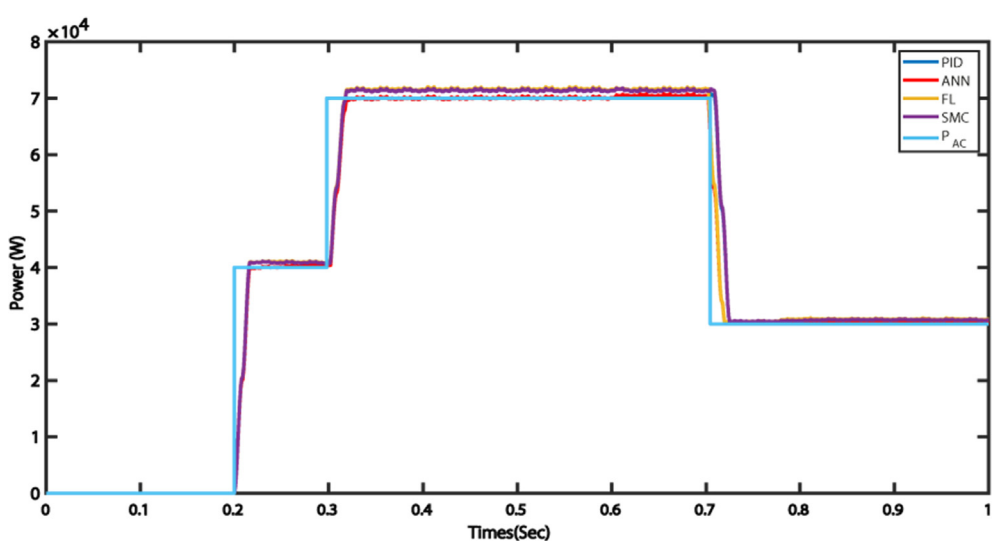

Fig. 20. Comparison of between the applied control methods with respect to the power measured at the AC bus.

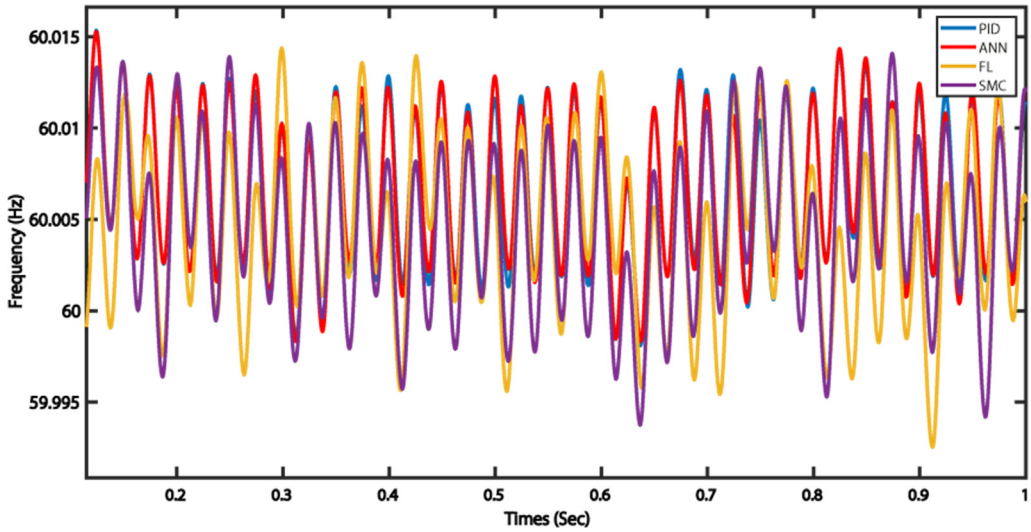

Fig. 21. Comparison between the applied control methods with respect to the measured frequency at the AC.

pendently implemented for the developed hybrid microgrid system. The comparison of various control methods is presented and discussed with various perspectives on the microgrid performance measures such as power balance, voltage control, and frequency stability. Moreover, we applied the maximum power point tracking based on a proposed ANN controller and compared it to the other most cited controllers. In the proposed hybrid microgrid and energy management system, the controllers were implemented to control the battery storage system through a bidirectional DC/DC converter for effective performance under various operational conditions. From the obtained results, we accomplished the following key findings;

- The efficiency of the ANN and PID controller is better than FL and SMC controller in terms of voltage and power stabilization at the DC bus.
- If the bus voltage stabilization is the main object, the controller ANN offers the best optimal results.
- In case of frequency stabilization at the AC bus or energy-saving, the FL is the best controller choice for the energy management system.
- Finally, we observed and concluded that the SMC has low performance compared to the other applied controllers.

The future work of this research includes the experiential validation of the proposed strategy at various power levels embedded system and the implementation of smart meters, which will measure the variation at the microgrids in real-time and send the data to the embedded system to generate the control system for microgrid converters. Moreover, sensitivity analysis is to be performed to justify the performance of the proposed controller against the variation of the model parameters.

Acknowledgments

The authors would like to acknowledge and thank to the State Key Laboratory of Advanced Electromagnetic Engineering and Technology, Huazhong University of Science and Technology, China, Grant Number. AEET2022KF003 for supporting this study.

References

[1] Mazidi M, Rezaei N, Ardakani FJ, Mohiti M, Guerrero JM. A hierarchical energy management system for islanded multi-microgrid clusters considering frequency security constraints. Int J Electr Power Energy Syst 2020;121.
[2] Elkadeem MR, Elaziz MA, Ullah Z, Wang S, Sharshir SW. Optimal Planning of Renewable Energy-Integrated Distribution System Considering Uncertainties. IEEE Access, pp. 1–1; Oct. 2019.
[3] Ullah Z, Elkadeem MR, Kotb KM, Taha IBM, Wang S. Multi-criteria decision-making model for optimal planning of on/off grid hybrid solar, wind, hydro, biomass clean electricity supply. Renew Energy 2021;179:885–910.
[4] Ullah Z, Elkadeem MR, Wang S, Sharshir SW, Azam M. Planning optimization and stochastic analysis of RE-DGs for techno-economic benefit maximization in distribution networks. Internet of Things 2020.
[5] Roslan MF, Hannan MA, Ker PJ, Uddin MN. Microgrid control methods toward achieving sustainable energy management. Appl Energy 2019;240 (February):583–607.
[6] Mirsaeidi S, Dong X, Said DM, Towards hybrid AC/DC microgrids: Critical analysis and classification of protection strategies. Renew Sustain Energy Rev. vol. 90; 2018.
[7] Roslan MF, Hannan MA, Ker PJ, Mannan M, Muttaqi KM, Mahlia TI. Microgrid control methods toward achieving sustainable energy management: A bibliometric analysis for future directions. J Clean Prod 2022;vol. 348, no. March:131340.
[8] Elmouatamid A, Ouladsine R, Bakhouya M, El Kamoun N, Khaidar M, Zine-Dine K. Review of control and energy management approaches in micro-grid systems. Energies 2021;14(1).
[9] Ali S, Zheng Z, Aillerie M, Sawicki JP, Péra MC, Hissel D. A review of dc microgrid energy management systems dedicated to residential applications. Energies 2021;14(14).
[10] Wang L, Liu X, Ni X, Jiang S, Liu S. A stability control way of bus voltage in DC microgrid with constant power load. IEEJ Trans Electr Electron Eng 2021;16 (9):1187–94.
[11] Kumar A, Bhat AH. Role of dual active bridge isolated bidirectional DC-DC converter in a DC microgrid. INC 2022.
[12] Elmetwaly Ahmed Hussain, ElDesouky Azza Ahmed, Omar Ahmed I, Saad Mohammed Attya. Operation control, energy management, and power quality enhancement for a cluster of isolated microgrids. Ain Shams Eng J 2022;13(5).
[13] Hemeida Ashraf Mohamed, Omer Ahmed Shaban, Bahaa-Eldin Ayman M, Alkhalaf Salem, Ahmed Mahrous, Senjyu Tomnobu, El-Saady Gaber. Multi-objective multi-verse optimization of renewable energy sources-based micro-grid system: Real case. Ain Shams Eng J 2022;13(1).
[14] Butt Osama Majeed, Zulqarnain Muhammad, Butt Tallal Majeed. Recent advancement in smart grid technology: Future prospects in the electrical power network. Ain Shams Eng J 2021;12(1).
[15] Parise G, Martirano L, Kermani M, Kermani M. Designing a power control strategy in a microgrid using PID/fuzzy controller based on battery energy storage. Conference Proceedings - 2017 17th IEEE International Conference on Environment and Electrical Engineering and 2017 1st IEEE Industrial and Commercial Power Systems Europe, EEEIC / I and CPS Europe 2017, 2017.
[16] Sanal A, Mohan V, Sindhu MR, Kottayil SK. Real time energy management and bus voltagedroop control in solar powered standalone DC microgrid. TENSYMP 2017 - IEEE International Symposium on Technologies for Smart Cities, 2017.
[17] Mohammed MS, Al-Awasa KM, Al-Majali HD. Energy management and control in micro grid with hybrid energy storage systems by using PI and flatness theory. Int J Eng Trends Technol 2021;69(11):227–35.
[18] Boujoudar Y, Azeroual M, El Moussaoui H, Lamhamdi T. 'Intelligent controller based energy management for standalone power system using artificial neural network. Int Trans Electr Energy Syst 2020;30(11).

[19] Sivamani D, Shyam D, Nazar Ali A, Premkumar K, Narendiran S, Albert Alexander S. 'Solar powered battery charging system using optimized PI controller for buck boost converter. IOP Conf Ser Mater Sci Eng 2021;1055(1).
[20] Kumar S, Chauhan T, Rai S, Ali Z, Govindharaj A, Ambikapathy A. Controlling Bidirectional Power Flow of BESSs in DC Microgrids using Sliding Mode Controller. 2021 Asian Conference on Innovation in Technology, 2021, 2021.
[21] Purohit CS, Geetha M, Sanjeevikumar P, Maroti PK, Swami S, Ramachandaramurthy VK. Performance analysis of DC/DC bidirectional converter with sliding mode and pi controller. Int J Power Electron Drive Syst 2019 Mar;10(1):357–65.
[22] Rashad M, Raoof U, Siddique N, Ahmed BA. Equivalent Sliding Mode Controller for Stability of DC Microgrid. p. 23; 2021.
[23] Ranganathan S, Sathi RR. Design and analysis of fast response sliding mode controller for quadratic boost converter based hybrid PV/Wind system in DC micro-grid. J Electrical Eng Technol 2021 Sep;16(5):2561–71.
[24] Armghan H, Yang M, Armghan A, Ali N, Wang MQ, Ahmad I. Design of integral terminal sliding mode controller for the hybrid AC/DC microgrids involving renewables and energy storage systems. Int J Electr Power Energy Syst 2020;119.
[25] Karray F. Intelligent control: Fuzzy logic applications. Eng Appl Artif Intell, vol. 10, no. 1; 1997.
[26] Choudhury AR, Pati S, Choudhury A, Mohanty KB. 'Control of voltage & frequency of a hybrid microgrid using a FLC based bidirectional converter equipped with BESS. International conference on technologies for smart city energy security and power: smart solutions for smart cities, ICSESP 2018 - proceedings, 2018. vol. 2018-January.
[27] Nasab AS, Aeini M, Salemnia A, Kazemi MM. A new method of energy management system in Islanded DC microgrid using fuzzy logic controller. 34th international power system conference 2019, 2019.
[28] Ganesan S, Ramesh V, Umashankar S, Sanjeevikumar P. 'Fuzzy-based microgrid energy management system using interleaved boost converter and three-level NPC inverter with improved grid voltage quality. Lecture Notes Electr Eng 2018;435.
[29] Boujoudar Y, Azeroual M, Elmoussaoui H, Lamhamdi T. Intelligent control of battery energy storage for microgrid energy management using ANN. Int J Electr Comput Eng 2021;11(4).
[30] Kang KM, et al. Energy management method of hybrid ac/dc microgrid using artificial neural network. Electron., vol. 10, no. 16; 2021.
[31] Albarakati AJ. et al. Real-time energy management for DC microgrids using artificial intelligence. Energies, vol. 14, no. 17; 2021.
[32] Singh P, Lather JS. Power management and control of a grid-independent DC microgrid with hybrid energy storage system. Sustain Energy Technol Assessments 2021;43(July 2020):100924.
[33] Ismail MM, Bendary AF, Elsisi M. Optimal design of battery charge management controller for hybrid system PV/wind cell with storage battery. Int J Power Energy Convers 2020;11(4):412–29.
[34] Kavitha V, Malathi V, Guerrero JM, Bazmohammadi N. Energy management system using Mimosa Pudica optimization technique for microgrid applications. Energy 2022;1(244).
[35] Li S, Li Y, Chen X, Li T, Zhang W. A novel flexible power support control with voltage fluctuation suppression for islanded hybrid AC/DC microgrid involving distributed energy storage units. Int J Electr Power Energy Syst 2020;123 (February):106265.
[36] Sinha S, Bajpai P. Power management of hybrid energy storage system in a standalone DC microgrid. J Energy Storage 2020;30(April):101523.
[37] Abdi H, Williams LJ. Principal component analysis. wiley interdisciplinary reviews: computational statistics. Wiley Interdisplinary Rev Comput Stat 2010.
[38] Faculty T. 'Study of Fuzzy Logic Control of Dc-Dc Buck Converter Zeynep Bala DURANAY. Hanifi GULDEMIR' 2017;12(2):23–31.
[39] Rezk H, Aly M, Al-Dhaifallah M, Shoyama M. Design and hardware implementation of new adaptive fuzzy logic-based MPPT control method for photovoltaic applications. Ieee Access 2019 Aug;5(7):106427–38.
[40] Emel'Yanov SV, Korovin SK, Levant A. High-order sliding modes in control systems. Comput Mathe Model 1996 Jul;7(3):294–318.
[41] Abianeh AJ, Ferdowsi F. Sliding mode control enabled hybrid energy storage system for islanded dc microgrids with pulsing loads. Sustainable Cities Soc 2021 Oct;1(73).
[42] Usama M, Kim J. Low-speed transient and steady-state performance analysis of IPMSM for nonlinear speed regulator with effective compensation scheme. Energies 2021 Oct 14;14(20):6679.
[43] Fallaha CJ, Saad M, Kanaan HY, Al-Haddad K. Sliding-mode robot control with exponential reaching law. IEEE Trans Indust Electron 2010 Mar 22;58 (2):600–10.
[44] Ullah Z, Wang S, Wu G, Xiao M, Lai J, Elkadeem MR. Advanced energy management strategy for microgrid using real-time monitoring interface. J Energy Storage 2022 Aug;1(52).

Dr. Zia Ullah received a PhD degree in electrical engineering from the Huazhong University of Science and Technology (HUST), Wuhan, China, in 2020. He is currently working as a Postdoctoral Research Fellow at the State Key Laboratory of Advanced Electromagnetic Engineering and Technology, HUST. His research interests include power system optimization, intelligent power distribution system, distribution system planning with RES, operation and control, Microgrid optimization and control.

Prof. Shaorong Wang received the B.Eng. degree from Zhejiang University, Hangzhou, China, in 1984, the M. Eng. degree from North China Electric Power University (NCEPU), Baoding, China, in 1990, and the PhD degree from the Huazhong University of Science and Technology (HUST), Wuhan, China, in 2004, all in electrical engineering. Currently, he is serving as a Full Professor and PhD supervisor at Huazhong University of Science and Technology. His current research interests include smart grid, power system operation and control, wind power, renewable energy resources, and power system planning.

Dr, Jinmu Lai (Member, IEEE) received the B.S. and M.S. degree in electrical engineering and the PhD degree from the Huazhong University of Science and Technology, Wuhan, China, in 2014, 2017, and 2020, respectively. He is currently a Lecturer with the School of Electrical Engineering, Zhengzhou University. His research interests include electric energy routers, power quality control, and the application of power electronics in power systems.

Muhammad Azam received the BSc Electrical Engineering from UET Taxila in 2012 and M.S degrees in electrical engineering from the Comsats University Islamabad in 2015.He is serving as Lab Engineer / Lecturer with the foundation University Islamabad. Currently, he is pursuing his PhD from Jiangsu University, China. His research interests include designing and optimization of hybrid microgrids, investigation of renewable energy systems, and analysis of fuel cells and photovoltaics.

Prof. Fazal Badshah Fazal Badshah received M.Sc. in Physics from University of Peshawar in 2002 and did his PhD degree in Quantum Optics from Pakistan Institute of Engineering and Applied Sciences (PIEAS), Islamabad. He worked as Assistant Professor in COMSATS University, Islamabad from 2014 to 2018. After doing a Postdoc in Huazhong university of Science and technology, Wuhan China, he is currently working as Association Professor in Hubei University of Automotive technology, Shiyan China. His research interests include Quantum Optics, electronics and information technology.

Prof. Guoan Wu has been a lecturer and associate professor in the Department of Electronic Science and Technology Huazhong University of Science and Technology since 1988. Currently, he is a full professor and the Director of Microwave Technology Application Research Institute, Department of Electronic Science and Technology, Huazhong University of Science and Technology; Director of Electronic Materials and Devices Center, Research Institute of National Defense Technology, Huazhong University of Science and Technology.

Dr. M. R. Elkadeem received the B.S. and M.S degrees in electrical engineering from, Faculty of Engineering Tanta University, Tanta, Egypt, in 2012 and 2016, respectively. From 2013 to 2018, he was a Research Assistant Lecturer with the Faculty of Engineering, Tanta University, and Tanta, Egypt. In 2021, he received a PhD degree from Huazhong University of science and technology Wuhan, P. R. China. His research interests include planning and designing hybrid renewable energy systems, power system optimization, distribution automation, and reliability analysis.