Project 3: Design of fed-batch bioreactors

13.04.2026

This project consists of 3 exercises and 1 bonus exercise, where you will learn how to work with chemostat systems.

The report has to be uploaded in Moodle by Sunday 27 April at 23:59 h.

It should be uploaded in 1 pdf file containing max. 12 pages per group.

In this report, we expect that you:

(i) report the numerical answers and plots obtained defining the correct units!
(ii) briefly explain how you have obtained these answers.
(iii) give an interpretation of the values/plots obtained.

You also need to upload separately <u>all the *code files*</u> that you created and used to produce the results. Try to separate the files in sections, following a detailed structure and adding comments to document the procedure.

Code should run by simply executing the script/main function.

No extra arguments. No external data.

EXERCISE 1

Consider a chemostat system with cell recycle, as shown in the figure below. The system is operating under glucose limitation and is at steady state.

In this figure, α is the recycle ratio based on volumetric flow rates, C is the concentration factor or ratio of cell concentration in the cell recycle stream to the cell concentration in the reactor effluent, F is nutrient flow rate, V is culture volume, X_0 and X_1 are cell concentrations in the feed and recycle streams and X_2 is cell concentration in effluent from the cell separator. Neglect the maintenance energy for the cells. Assume that cell concentration in the feed is 0, $X_0 = 0$.

The yield coefficient, $Y_{x/s}$ is 0.5 gdw cells/ g substrate, glucose concentration in the feed is $S_0 = 2\frac{g}{L}$, the feed flow rate and culture volumes are F=1500 ml/h and V=1000 mL, respectively. The kinetic parameters are $\mu_m = 1\ h^{-1}$ $K_s = 0.01\frac{g}{L}$. The recycle ratio is $\alpha = 0.5$ and the value of C is 2.

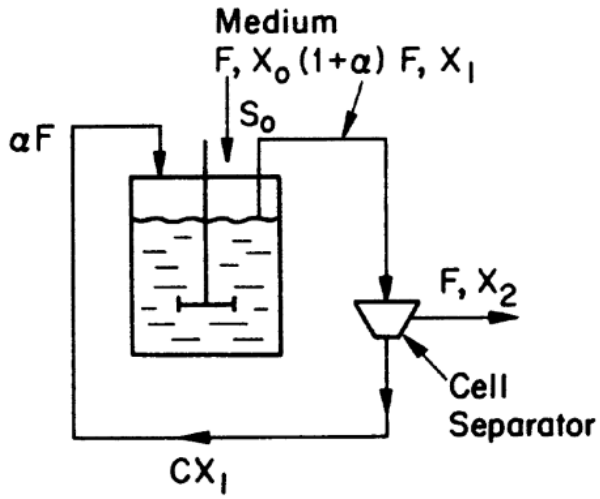

a) Show that a chemostat with cell recycle in the steady state can operate at dilution rates higher than the specific growth rate, by writing mass balance on cell concentration around the fermenter.

b) Find the specific growth rate (μ) of the organism at steady state.

c) Find the substrate concentration in the recycle stream (S) using Monod equation.

d) Write the mass balance on substrate concentration and then find the cell concentration in the recycle stream.

e) Find the cell concentration in the separator effluent (X_2).

f) Define a range for α (Hint: Use your derived equations from part a). Derive a theoretical formula to calculate D_{max} as a function of α. Plot the cell concentrations and productivities as a function of the dilution rate for different values of α. Comment on the results. What does $\alpha = 0$ stand for?

EXERCISE 2

Penicillin is produced by *P. chrysogenum* in a fed-batch culture with the addition of glucose solution to the culture medium. The initial culture volume is $V_0 = 200$ L and the initial cell concentration is 30 g/l. At t=0 glucose-containing nutrient solution starts to be added with a flow rate of $f_0 = 50$ l/h.
The tank has a capacity of 800 liters. When the tank reaches its maximum volume, we remove 600 liters from it and continue feeding. This corresponds to a cycle of the reactor.
The glucose concentration in the feed solution is $S_0 = 100$ g/l. The kinetic and yield coefficients of the organism are:
μ_m=0.2h^{-1}, $K_S = 0.50$ g/l, $K_I = 50$ g/l, $Y_{x/s} = 0.3$ g-cells/g-glucose,
The specific rate of the product is: $q_p = 0.08$ g-product/g-cell/h.

a) Derive the differential equations for the **concentrations** [S, X, P] (*Hint! The volume is not constant over time! Start from mass balances…*) of system and write down the initial conditions of the system *(at t=0, Tank only contains X, hence P=0, S=0).* Neglect the cell maintenance terms and consider an appropriate growth rate that account for **substrate inhibition**. Consider that substrate acts as an uncompetitive inhibitor. *(Hint: You can refer to your slides from Lecture 1)*
b) From the above information, define the time for one cycle of the reactor.
c) Plot the time development of glucose and cells over 10 cycles. What is the total amount of product (i.e. in kg) that has been removed from the tank from time zero until that time?
d) Did the substrate actually inhibit the system? *(Hint: Compare the cell growth rate with and without inhibition)* What would be the risk of increasing the amount of substrate in the feed?
e) What is the advantage of fed-batch vs batch culture when the substrate has an inhibitory effect?
f) You want to optimize the reactor cycle: How does the production rate after 10 cycles (i.e. mass of product removed from 10th cycle/ cycle time) change as a function of the feed substrate concentration? Plot the production rate as a function of feed substrate concentration.

For more information on substrate inhibition see **Sivakumarmar et al., 1994.**

EXERCISE 3

In some fermentations, the growth and product-formation steps need to be separated, e.g., secondary metabolite, culture of genetically engineered cells.

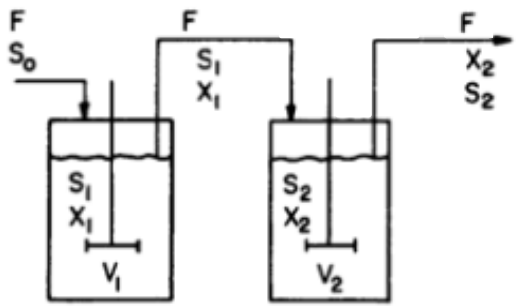

Consider a system consisting of two reactors as shown above. If the flowrate (F) is 100 l/h, input substrate concentration is 10 g/L (S0), Max yield 0.5
g cell mass/g substrate, and Monod growth parameters are: $\mu m = 1\ h^{-1}$ and $K_S = 0.75$ g/L, predict the outlet concentrations of the cell and substrate plus specific growth rate under following assumptions:
System is operating under steady state conditions.
You can neglect the maintenance energy of the cells.

a) The working volume of the first reactor is 800 L and the second reactor 200 L.

b) The working volume of the first reactor is 200 L and the second reactor 800 L.

c) The working volume of the first reactor is 900 L and the second reactor 100 L.

d) The working volume of the first reactor is 100 L and the second reactor 900 L.

(Hint: In order to solve a system of nonlinear equations in MATLAB, you can use *fsolve*)

Compare the proposed configurations in terms of output cell and substrate concentrations.
Compare the value predicted if a single 1000 l reactor was used.

BONUS

The kinetics of microbial growth, substrate consumption, and mixed-growth-associated product formation for a chemostat culture are given by the following equations:

$$r_x = \frac{\mu_m S}{K_s + S} X$$

$$r_s = \frac{\mu_m S}{(K_s + S) Y_{X/S}} X$$

$$r_p = \alpha\, r_x + \beta X$$

The kinetic parameter values are $\mu_m = 0.7\ h^{-1}$, $K_s = 20\ {}^{mg}/_{l}$, $Y_{X/S} = 0.5\ {}^{g\ dw}/_{g\ substrate}$, $\alpha = 0.1$, $\beta = 0.02\ h^{-1}$, and $S_0 = 1\ {}^{g}/_{l}$, $P_0 = 0\ {}^{g}/_{l}$.

a) Determine the optimal dilution rate maximizing the productivity of product formation (PD).

b) Determine the optimal dilution rate maximizing the productivity of cell (biomass) formation (XD).