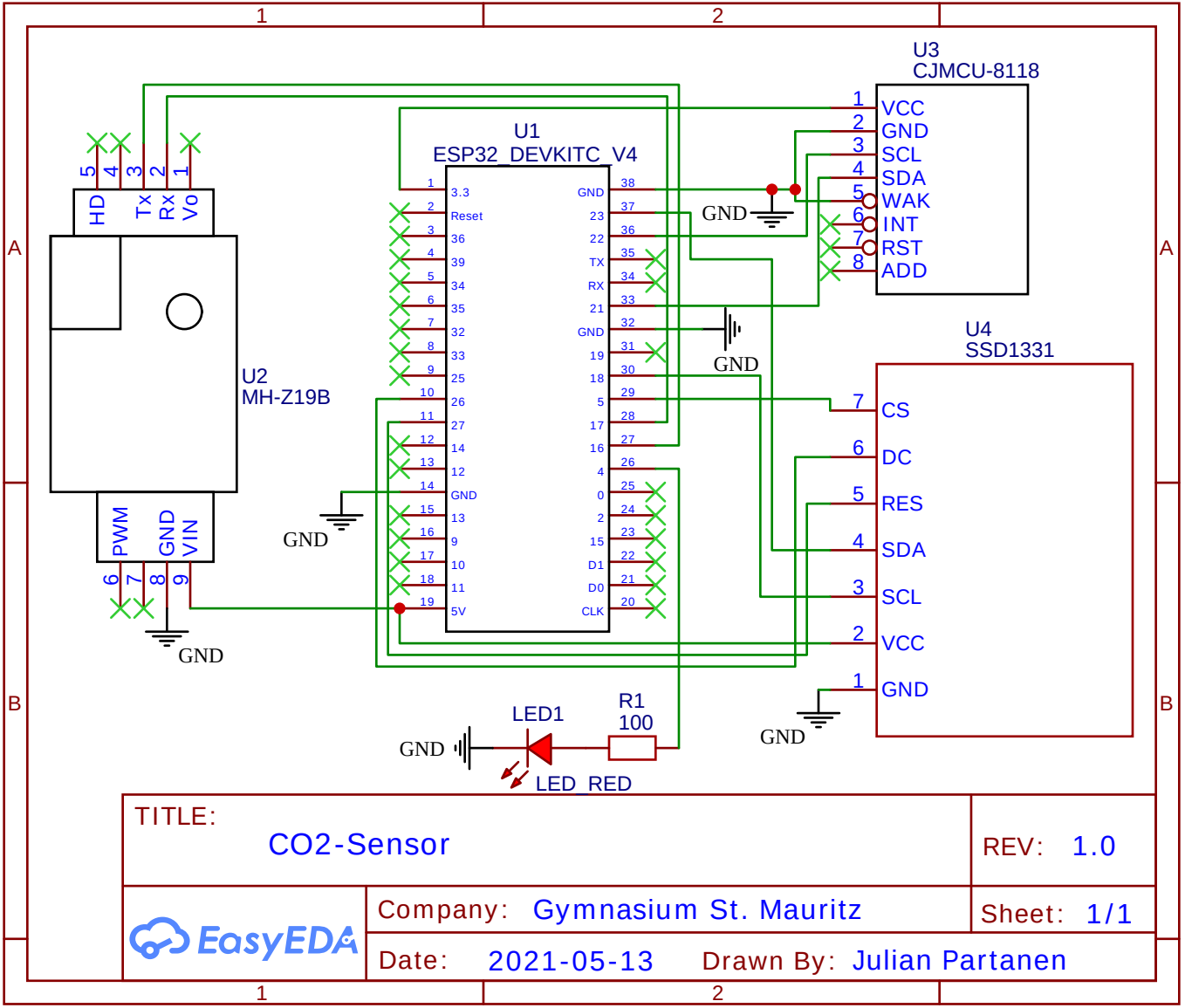

TITLE: CO2-Sensor		REV: 1.0
EasyEDA	Company: Gymnasium St. Mauritz	Sheet: 1/1
	Date: 2021-05-13 Drawn By: Julian Partanen	